NIH Design Policy and Guidelines

Office of Research Facilities

Revisions to Design Policy & Guidelines

Location	Date Changed	Revisions
Supporting Links	6/23/04	Added
Measurable Criteria vs. Design Philosophies 9.	6/23/04	Added to Introduction Section
Sustainable Design B.8	1/14/04	The heat exchanger fluid, consisting of ~~ethylene~~ glycol and water, is circulated through the system by a pump, removing heat from the hot air stream and transferring it to the cold air stream. The heat exchanger fluid, consisting of propylene glycol and water, is circulated through the system by a pump, removing heat from the hot air stream and transferring it to the cold air stream.
Mechanical F.130	1/14/04	Supplemental chillers may operate in winter months and therefore will have ~~ethylene~~ glycol automatic fill equipment. Supplemental chillers may operate in winter months and therefore will have propylene glycol automatic fill equipment.

Means of Egress D.36	1/14/04	A minimum 0.~~30~~ m clear aisle space shall be maintained around laboratory benches and furniture. A minimum 0.92 m clear aisle space shall be maintained around laboratory benches and furniture.
Mechanical F.79	7/24/03	~~Drawthrough or blowover~~ chilled water coils. Draw-through chilled water coils.
Mechanical F.84	7/24/03	Units ~~may~~ be ~~either~~ draw-through ~~or blow through~~ arrangements. Units shall be in a draw-through arrangement.
Mechanical F.86	7/24/03	~~In case of blow-over units with the drain pan on the discharge side of the fan, the trap height must be sufficient~~ to account for the static pressure in the unit. Where blow-over units are approved the drain pan on the discharge side of the fan, must have a sufficient trap height to account for the static pressure in the unit.

Mechanical F.86 7/24/03

Fans ~~may~~ be arranged in either the ~~blow-through or~~ draw-through position.

Fans shall be arranged in the draw-through position.

Supporting Links

Supporting Research http://des.od.nih.gov/eWeb/research/farhad/index.htm

NIH Design Policy and Guidelines

Introduction

Office of Research Facilities

Preface

The goal of the NIH Design Policy and Guidelines is to ensure the quality of design and construction of NIH state-of-the-art facilities that are vital to the health care of all Americans. The material contained in this NIH Design Policy and Guidelines is the result of a partnering effort led by the Office of Research Facilities (ORF), Division of Policy and Program Assessment. Components within the Office of Research Facilities, Office of Research Services, Division of Safety, Division of Public Safety, and the Institutes and Centers of the National Institutes of Health were represented to provide input and expertise to this document.

The 2003 NIH Design Policy and Guidelines represents a major restructuring and reorganization of the previous version of the NIH Design Policy and Guidelines. It incorporates feedback from a customer survey conducted during 2001, trends affecting biomedical research facility and animal research facility design and construction, and state-of-the-art technological changes. It also incorporates the NIH Planning and Programmatic Guidelines, resulting in a consolidated planning and design document for the NIH design and construction program.

Introduction

1. Purpose

The NIH Design Policy and Guidelines represents a large body of knowledge gathered from many sources within the Office of Research Facilities (ORF), at the National Institutes of Health (NIH), other Federal agencies, and the private sector. The purpose of this document is to provide guidance to the architect and engineer (A/E) contractor and ORF staff in the preparation of NIH construction contract documents and to promote excellence in the process of planning, programming, designing, and constructing NIH facilities.

2. Application of the NIH Design Policy and Guidelines

The NIH Design Policy and Guidelines establishes policy, design standards, and technical criteria for use in programming, designing, and constructing new buildings, and major and minor alterations for the NIH. This document applies to the design and construction for all NIH facilities nationwide, including those that are owned by the NIH and those that are leased by the Federal Government for use by the NIH. NIH grantees should refer to their Grants Officer for application of the NIH Design Policy and Guidelines to specific construction grants.

3. The NIH Organization

The NIH, an agency of the U.S. Department of Health and Human Services, is the Federal focal point and steward of biomedical and behavioral research for the Nation. The NIH's mission is science in pursuit of fundamental knowledge about the nature and behavior of living systems and the application of that knowledge to extend healthy life and reduce the burdens of illness and disability. It is the world's largest biomedical research facility, comprising 28 Institutes and Centers, including the Clinical Center (research hospital), Fogarty International Center, which leads the efforts on global health research and communications, and National Library of Medicine, which is the world's largest medical

library. The NIH's support for biomedical research around the Nation has resulted in over 90 Nobel prizes in science and medicine. Each year, an average of 75,000 patients from throughout the Nation come to the NIH to participate in its cutting-edge biomedical and clinical research programs.

The goals of the NIH are as follows: (1) foster fundamental creative discoveries, innovative research strategies, and their applications as a basis to advance significantly the Nation's capacity to protect and improve health, (2) develop, maintain, and renew scientific human and physical resources that will ensure the Nation's capability to prevent disease, (3) expand the knowledge base in biomedical and associated sciences in order to enhance the Nation's economic well-being and ensure a continued high return on the public investment in research, and (4) exemplify and promote the highest level of scientific integrity, public accountability, and social responsibility in the conduct of science.

Eighty percent of the NIH's annual budget supports biomedical research around the Nation including construction of private-sector biomedical research facilities. The NIH's center of operations is a 320-acre campus in Bethesda, Maryland, with 80 buildings comprising 8.5 million gross square feet of space. The NIH has eight field stations throughout the Nation located in Poolesville, Maryland; Baltimore, Maryland; Hamilton, Montana; Sabana Seca, Puerto Rico; Research Triangle Park, North Carolina; Frederick, Maryland; Perrine, Florida; and New Iberia, Louisiana.

Figure 3 shows the Institutes, Centers, and Offices that make up the NIH.

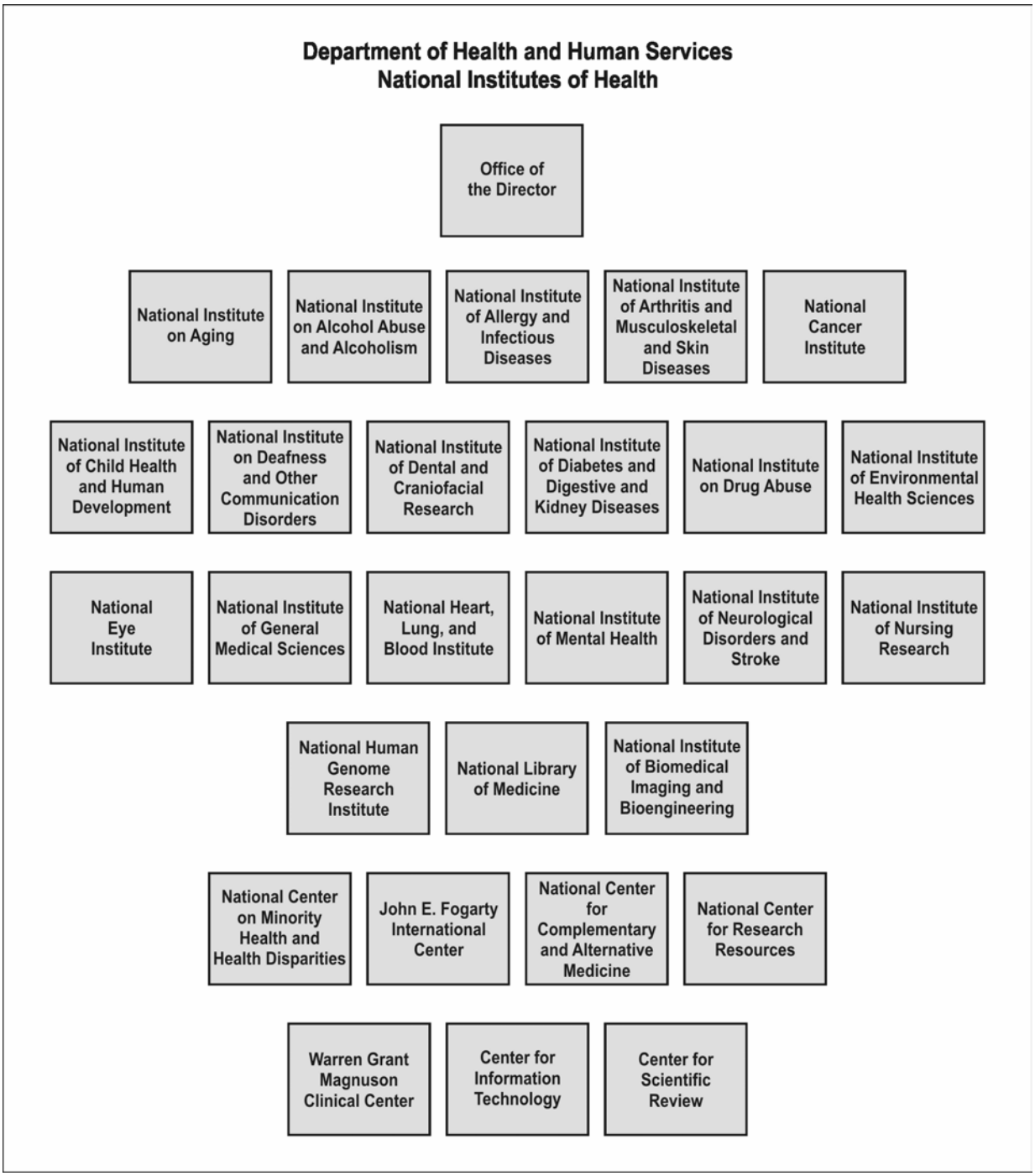

Figure 3 NIH Institutes, Centers, and Offices

4. Master Plans

Master Plans for the NIH sites serve as strategic tools for the efficient allocation of resources, the orderly development of future growth, and the creation and maintenance of a physical environment functionally and aesthetically conducive to accomplishing the mission of the NIH. The development, coordination, and update of the NIH Master Plans impact significantly on the development of the NIH building programs. Master planning for the NIH sites defines the physical framework for the changing nature, character, and urgency of biomedical research and education. It provides a supportive environment for the people involved in NIH activities and protects and enhances the natural and environmental qualities of the NIH sites and their surrounding communities.

Site development guidelines are established in conjunction with the Master Plans. They define key elements and determine major relationships, patterns, and standards that should be adhered to when developing site or building projects. Development guidelines address issues of building size and massing, definition of open spaces, site character and quality as well as access and circulation. The guidelines also address phased implementation of the Master Plans in a logical sequence of construction, renovation, or demolition over the life of the plan.

In addition to the development of long-range Master Plans for the NIH sites, site-specific short-range planning studies and feasibility and cost/benefit analyses are often required to prepare proposals for future management and development, including allocation of land areas for appropriate use and construction priorities. Alternative plans to reach the goals and objectives of the Master Plans must be formulated and monitored continuously. Finally, programs and measures to implement the Master Plans must be evaluated to emphasize key priorities, identify and avoid potential future conflicts, and ensure the critical continuity of functions.

5. Codes and Standards

All new construction and renovation projects shall comply with all applicable Federal, Departmental, State, and local regulations, codes, and standards. The Federal and State/local codes and standards and Departmental regulations must be followed without exception for the design of systems that have a direct impact on offsite terrain or utility systems.

5.1 Code Editions: The current edition of the NIH Design Policy and Guidelines, and each applicable code and standard in effect at the time of design contract award, shall be used throughout the project's design and construction period.

5.2 Code Requirements for Renovations: Building systems affected by renovation shall be upgraded to correct deficiencies identified by the NIH, unless the entire building is being renovated. All new work is required to meet the standards required for new construction.

5.3 Conflicts Between NIH Requirements, Codes, and Standards: All conflicts between the NIH Design Policy and Guidelines and national and/or State/local codes or standards shall be brought to the immediate attention of the NIH Project Officer for resolution.

5.4 Metric Standards: All final drawings and specifications for new construction shall be expressed in metric units. Where possible, renovations should be in metric units. The General Services Administration *Metric Design Guide (PBS-PQ260)*, latest edition, and the *Metric Guide for Federal Construction* (first edition) shall be used for guidance on how drawings, specifications, and other elements of metric implementation are to be addressed. The submission of drawings and specifications during the design process may be submitted with standard English units in parenthesis for ease of review.

Exceptions to the exclusive use of metric units occur in several technical sections of the General Design Guidelines volume. Where only English units have been indicated, there is no acceptable metric equivalency. Dual dimensioning may be indicated where pipes, valves, fittings, and equipment are not available in metric sizes.

5.5 CAD Drawings: All drawings shall be created using the latest version of AutoCAD Architectural Desktop and associated Building system software, and shall be drawn in 3D to create building models. Drawings shall be in compliance with latest Industry Foundation Classes (IFCs), and latest NIH CAD standards. The drawings submissions shall be accessible for view by all reviewers using a centralized electronic drawing management system.

6. Facility Acquisitions

Facility acquisitions include the purchase and/or lease of existing structures or facilities by the Federal Government. Existing facilities that are purchased and/or leased for use by NIH employees or which will house NIH equipment shall comply with all applicable Federal,

national, State/local, and Departmental and Agency regulations and policies, including the NIH Design Policy and Guidelines.

It is imperative that facilities acquired by lease for the NIH are capable of meeting all safety criteria and all other criteria that in any way will have an adverse effect on the health and/or safety of the building occupants or have an adverse affect on the integrity of ongoing research.

It is strongly advised that any proposed existing facility be evaluated prior to entering into a purchase or lease agreement for its capability to comply with the NIH Design Policy and Guidelines.

Purchased or leased facilities whose intended function will be to conduct biomedical research shall be evaluated for their ability to provide flexible, adaptable, and expandable space to the greatest extent possible. The extent to which the facility will adhere to the requirements outlined in the NIH Design Policy and Guidelines should be reviewed by the NIH on a case-by-case basis. Elements such as the length of the lease term and future plans/programs of the occupants of the building should be considered in the review. Variances from the NIH Design Policy and Guidelines shall be sought during the design process.

7. Gross and Net Area Calculations

For methodology on calculating Gross and Net area, see Volume: Appendices.

8. How To Use the Guidelines

The NIH Design Policy and Guidelines is designed for use by all divisions within the ORF and the architects and engineers who are designing facilities for the NIH. The Division of Policy and Program Assessment (DPPA), ORF, National Institutes of Health, is the proponent for development of the NIH Design Policy and Guidelines. The DPPA may be contacted for clarification of any particular requirement within the NIH Design Policy and Guidelines.

The NIH Design Policy and Guidelines encompasses the following components:

Volume 1: Introduction. This volume provides a general overview of the NIH organization and includes information on the applicability of the Guidelines and various codes and standards.

Volume 2: Biomedical Research Laboratories. This volume has been developed for a specific building type and is organized into chapters from general to specific requirements as follows:

A. Overview
B. Programmatic Goals and Objectives
C. Space Descriptions
D. Design Criteria

Volume 2 must be used in conjunction with Volume 4 to prepare a complete design.

Volume 3: Animal Research Facilities. This volume has been developed for a specific building type and is organized into chapters from general to specific requirements as follows:

A. Overview
B. Programmatic Goals and Objectives
C. Space Descriptions
D. Design Criteria

Volume 3 must be used in conjunction with Volume 4 to prepare a complete design.

Volume 4: General Design Guidelines. This volume is organized by discipline or unique topic. It includes all relevant reference material or describes references required for the design and construction of all types of NIH facilities.

Volume 5: Appendices. The appendices incorporate supplemental materials to the main volumes of the document. Included in the appendices are code references, design resources, checklists, forms, and general information that will assist in developing complete designs. Included in this volume is the A/E Checklist of Services, which lists the project deliverables and services by design phase that may be required for projects at the NIH.

References are not hot-linked to Web sites within the body of the document. The appendices include a list of some of the references that are hot-linked to Web sites.

Figure 7 presents an overview of the application of the NIH Design Policy and Guidelines on a typical project.

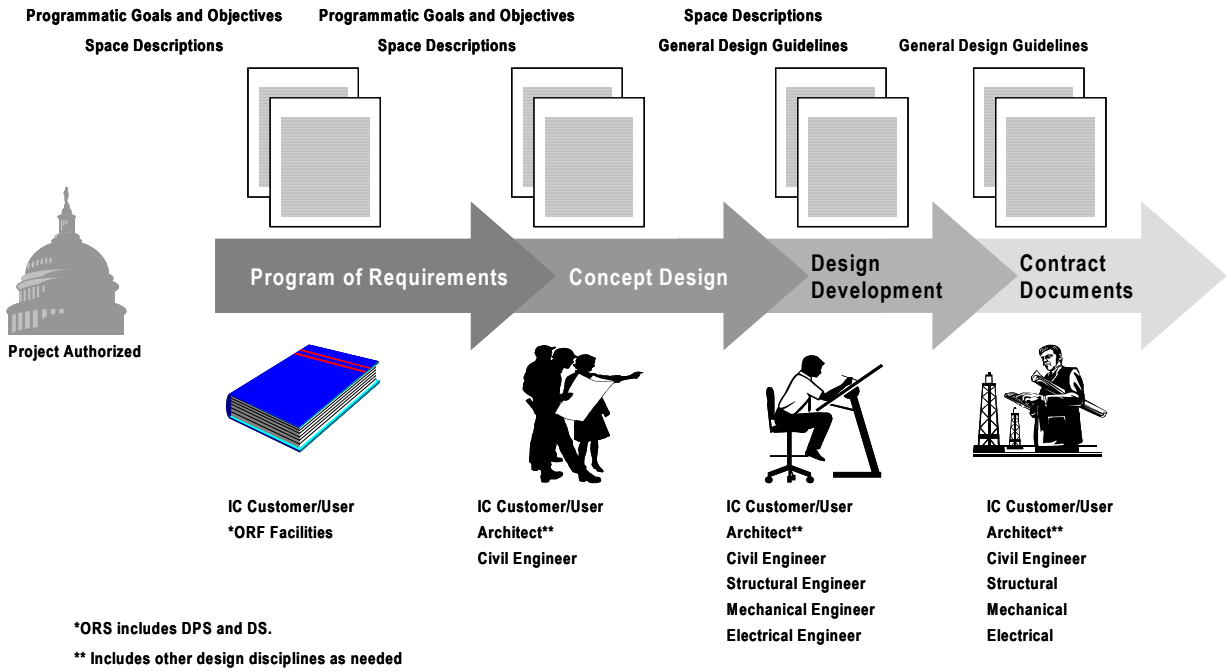

Figure 7 Application of the Guidelines to the Design Process

9. Measurable Criteria vs. Design Philosophies

To the extent possible the Design Policy and Guidelines (DPG) provide criteria that are measurable. However, the DPG also provide un-measurable criteria to describe what level of quality is reasonable within the overall context of the NIH mission.

The Design Policy and Guidelines includes terms such as **durable, flexible, expandable, versatile, interchangeable, industrial grade and adequate,** among others, **to** describe concepts and philosophies to highly skilled design professionals who act as a government trustee and as such have a fiduciary responsibility to carry out the design with the utmost degree of good faith, loyalty and undivided service to the government's interest.

Life expectancy and life cycle costs will vary depending on the type of facility, the geographic location and whether the facility is owned or leased.

- For leased facilities, the A/E should consult and use the Lease Facility Checklist to determine which elements of the Design Policy and Guidelines apply to the project based on the length of the lease.
- For owned facilities, the A/E must determine during early planning, what NIH's life expectancy projections are for the particular facility and design to that expectation.

Because of the long life expectancy of NIH's owned research facilities and the requirement to provide NIH staff with the equivalent quality and safety features in a leased facility, the A/E should take the following definitions into account when calculating facility life cycle and quality requirements.

Flexibility allows multiple choices or will accommodate future program changes. The A/E must assess the frequency of anticipated change based on the program requirement projections. Decisions on the degree of flexibility are cost driven. It is unrealistic to expect a facility to be totally flexible. When considering how flexible an NIH facility should be the A/E should ask the following questions:

- What is the cost of incorporation now versus the renovation cost in the future?
- What is the loss in revenue incurred by not having the facility available when renovating?
- What is the loss in research time and funds?

Flexibility includes **Adaptability, Versatility, Interchangeability and Expansibility**.

Adaptability is the ability to adjust to changing conditions or requirements under both normal and emergency conditions. This assumes that the MEP systems can accommodate changes in ventilation rate, temperature, humidity, and power.

Versatility is the ability to rearrange items within a space. For example, use of modular components within a lab or animal facility allows for relatively easy change out if there is a programmatic change.

Interchangeability is the ability to change components with a minimum number of parts and the least amount of storage space required.

Expansibility is the ability to enlarge at minimal cost. Expansibility refers to expanding within set boundaries of a facility by demounting walls or by expanding the building footprint.

The design professional is responsible for defining and understanding the needs of the NIH specific program. However, all programs change over time and no NIH facility is stand alone. While the designer must attempt to accommodate the specific needs of the users, the guidelines describe the broader needs of the research community. All **alternate design solutions** that meet the intent of the DPG and the customer needs must be identified and considered. The design team must analyze function so as to achieve the program needs, generate alternatives through the use of creative thinking and provide the required functions at the lowest cost without sacrificing minimum requirements. It is critical to analyze function of materials, systems, processes and building equipment for the purpose of achieving required functions at the lowest total cost of ownership.

10. Variance Request Procedures

The NIH Design Policy and Guidelines provides minimum quality standards that are performance oriented to the greatest extent possible to obtain a desired result. Prescriptive limitations, when given, such as exact dimensions or quantities, describe a condition that is commonly recognized as a practical standard or NIH requirement for effective operation. The provisions of this manual are not intended to prohibit the use of alternative systems, methods, or devices that are not specifically outlined in the document, providing that the proposed alternative design is at least equivalent or superior to the requirements in this manual with regard to such items as quality, strength, durability, effectiveness, fire resistance, health and safety, and so on, and is approved by the DPPA.

During the course of programming and design development, it may become necessary for Project Officers and A/E to request variances from the established minimum standards. These variances may be necessary to accommodate existing building constraints or site conditions, required technology, or the Program of Requirements. Requests for variances shall be submitted by the A/E through the Project Officer following these specific procedures:

- All requested variances within a single discipline shall be submitted as a single package at the same time (e.g., all mechanical in one package; all electrical in one package; etc.). This ensures that all variations to the guidelines can be reviewed at one time to preclude conflicts in guidance.

- Packages requesting variances that meet the prescribed criteria will be considered for review by the DPPA. If the submittal is incomplete, or requires resubmission, additional time may be required for the review. The Project Officer will provide the A/E with the requirements necessary for submittal.
- Following submittal of a complete package by the Project Officer to the DPPA, the review will take a minimum of 10 working days. Additional time may be necessary depending on the complexity of the request, coordination with other requests, or resubmittal due to incomplete documentation. This timeframe must be considered by the A/E team when developing the overall project development schedule.
- All variances shall be submitted before the completion of the design development stage (35 percent) for a project.

Variance Request Forms are available in the Appendix.

NIH Design Policy and Guidelines

Biomedical Research Laboratories

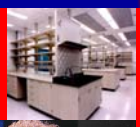

Office of Research Facilities

A. Overview

The NIH Research Laboratory Manual describes in general and specific terms the minimum NIH requirements for planning and designing facilities that primarily house biomedical research laboratories. The relationship of NIH research laboratories to research subjects demands careful consideration and is an integral part of the mission of the NIH. Laboratory and animal facilities must be distinct and separate building zones to satisfy systems, security, and materials management needs, yet provide the proximity of research subjects to labs.

A.1 Laboratory Activities

Biomedical research includes a variety of scientific disciplines that need to be accommodated in lab space. Laboratory facilities should provide space to perform experiments, electronic monitoring and calibration, information processing and retrieval, specimen and equipment storage, and recording equipment. Laboratories should be adaptable for the rapidly changing biomedical environment and should be able to support emerging scientific disciplines.

Laboratory facilities should also provide space for administrative activities and informal staff interaction. Administrative space should include offices for the laboratory chiefs and their secretarial and support staff. Areas should be provided to encourage interaction and philosophical exchange of ideas between scientists. Interaction areas may include refreshment or break areas, copy centers, stairwells, landings, meeting rooms, rest rooms, corridors, and terraces.

A.2 General Staffing Patterns of an NIH Laboratory

The number of staff in any laboratory varies according to type of research and can vary greatly. At the NIH, on average, there are 30 research personnel per laboratory. Laboratories are divided into branches and sections. A hierarchy of lab chiefs, branch chiefs, and section chiefs supervise each component. The size of each laboratory, branch, and section should be determined early in the planning process in order to determine the amount of space to be allocated. For planning purposes, it

can be assumed that there will be one to two principal investigators and/or senior scientists per laboratory. Each laboratory will have a small clerical support area consisting, on average, of two clerical personnel. The clerical support area should be of adequate size to accommodate files, copy machines, mailboxes, desks, and computers.

A.3 Laboratory Research Trends

Biomedical research is advancing rapidly, and the facilities must be designed to anticipate these advances. Highly sophisticated instrumentation, including robotics, is the wave of the future in biomedical research laboratories.

There is a trend toward larger, denser, shared laboratory support rooms such as equipment rooms and special function rooms. The use of fume hoods for biomedical research has decreased dramatically in recent years because researchers have replaced many volatile and carcinogenic reagents with less toxic chemicals and procedures. However, there is an ever-increasing need for temperature-controlled storage, i.e., cold and warm rooms.

Another trend that acutely affects design is a move toward large, open laboratory spaces. Open labs encourage more efficient use of space and resources but can also present challenges.

Local computer user rooms are essential for the modern laboratory. The computer user room should be designed into laboratory neighborhoods as shared space where all the equipment needed for the current state-of-the-art communication technology can be brought together and shared. Equipment in the computer user room may include microprocessors, personal computers, scanners, plotters, laser printers, 35 mm slide makers, and so on.

A.4 User Input

The ultimate users, especially the researchers, must be consulted during the development of Programs of Requirements and the design phases to truly meet the needs of the NIH. Users' input should be incorporated wherever possible and applicable in the project.

B. Programmatic Goals and Objectives

The NIH's goal is to provide state-of-the-art research laboratories to enhance and maintain its position as the world leader in biomedical research. The NIH accomplishes this goal by constructing new facilities and renovating older ones to meet ever-changing biomedical research needs.

The end users of the research laboratory shall be involved during the programming and design phases to meet the various specific needs of the laboratory occupants. Program requirements for the specific project shall be defined systematically and refined as needed throughout the project. The programming process shall address user needs, population density, building circulation, mechanical, electrical, and plumbing systems, and all aspects of safety.

The following goals and objectives define the minimum recommended program requirements for the design of research laboratory facilities. For specific requirements, see Biomedical Research Laboratories, Section: Design Criteria.

B.1 Quality of Life

The laboratory should be designed for people who do research and shall provide them with a safe and pleasant work environment that leads to increased productivity, higher retention rates, and easier recruitment of new staff. Direct natural light and view to the exterior, adequate work space, appropriate color, a coordinated and well-organized layout, attractive and functional casework, and amenities such as exercise facilities, cafeterias, credit unions, bank teller machines, vending machines, shops, and child care facilities are some of the design features that will enhance the quality of life.

B.1.1 Natural Light: Laboratories and offices shall be provided with natural light and views to the outside, as long as they do not conflict with functional requirements. This presents design challenges with significant planning and functional zoning implications in large, multifloor facilities. Two significant issues that should be addressed when providing natural light are glare to computer screens and bench work areas and the solar effects of heat on internal temperature control.

Natural light is not required in laboratory support areas such as a room containing large equipment or freezers. Laboratories utilizing photographic and optical diagnostic techniques should be located in dark areas of the facility such as interior support areas.

B.1.2 Lighting: Laboratory research requires high-quality lighting for close work. Lighting intensity and uniformity shall provide shadow-free illumination of the laboratory work surface. The ability to control lighting in specialized laboratories or in spaces that use computers should also be considered.

B.1.3 Noise: Noise-sensitive areas include, but are not limited to, space where microscopy, microinjection, or other procedures that require a high degree of manual precision or mental concentration are performed. Noise levels in laboratories are difficult to control because room finishes are generally hard and nonabsorbent. Equipment such as chemical fume hoods, centrifuges, and vacuum pumps contribute to the high noise levels within the laboratory. Planning should isolate noise-sensitive areas from noise sources wherever possible.

B.1.4 Vibration: Vibration caused by equipment can adversely affect the quality of life in the workplace for personnel. Structural dampening to minimize vibration is required for sensitive instruments so that scientific research is not adversely affected. Some pieces of equipment that are vibration sensitive can be placed on a special vibration-dampening table or close to more vibration-stable parts of the building such as at grade or near a column.

B.1.5 Interaction: Exchange of ideas in a biomedical research facility is fostered by formal and informal communication, interaction, and collaboration among researchers. In addition to the desired consolidation of branch-level activities, an important requirement is a building-planning concept that promotes informal encounters and communications among all its occupants. Proximity to common facilities, such as conference rooms, rest rooms, break rooms, coffee areas and vending machines, mailboxes, clerical support services, and supplies, encourages casual encounters and facilitates interaction. Interaction areas should be shared spaces, and these spaces should be designed to draw researchers out of their labs and offices from time to time.

Careful design of circulation patterns and corridor spaces can also contribute to interaction between building occupants in all parts of a building. The designer should

consider alternative informal interaction areas such as alcoves or event areas at the ends of corridors where researchers can talk together without using the traditional break area; stairwells can be designed as open, well-lit areas where researchers might meet going up or down between floors; elevator lobbies and general circulation corridors might have natural light and views and be large enough to provide informal seating areas; and in addition, bulletin boards, directories, and seating areas should be located in entrance lobbies or where there is cafeteria access. Conference rooms might open into these areas to encourage additional interaction. Another potential interactive space might be an exhibit area in a public entrance area that is adjacent to an auditorium, cafeteria, or other public space. Such areas shall be provided as part of a project's net assignable program.

B.1.6 Efficiency: Efficiency is a key element in the success of a laboratory facility. The designer should carefully consider circulation of personnel, animals, supplies, and waste as well as functional relationships and adjacencies to increase the efficient use of available space.

B.1.7 Graphics/Signage: Graphics and signage will help employees and visitors find their way through a laboratory building. Directional graphics and signage should be functional and in harmony with the architecture of the building. Signs are also important for the identification of the biohazard level of areas where biohazardous work is performed. See the NIH *Interior Signage System Users Manual* for detailed information.

B.1.8 Artwork: Artwork is not typically part of a project's construction budget and should be selected and purchased by the user. However, creative alternatives to purchasing artwork should be considered. These may include obtaining art through various loan programs or philanthropic donations. The design should be sensitive to user-defined artwork so that adequate structural support lighting and architectural detailing are provided.

B.2 Laboratory Research Space

Recruitment and retention of high-quality personnel are important to the success of the NIH mission. The goal of the NIH is to provide each investigator with adequate and comfortable laboratory work space, laboratory support space, storage space, office space, and administrative support space in order to create a safe and functional research environment.

B.2.1 Laboratory Work Space: Adequate laboratory work space should be provided to meet the need for areas of lab components such as chemical fume hoods, biological safety cabinets (BSC), laboratory benches, equipment, storage, and desk space. The space must be adequate to provide a safe working area, including access to and around equipment, containment devices, and benchtop areas, and to meet the current accessibility requirements for individuals with disabilities.

B.2.2 Laboratory Support Space: The need for lab support has increased dramatically. The ratio of lab bench area to lab support is approaching 1:1 versus 2:1 as in the past. Consideration should be given to locating noise-, heat-, and vibration-producing equipment in laboratory support spaces adjacent to the research laboratory. These may be dedicated or shared spaces, open alcoves, or securable rooms as required. They may also be on the same planning module as the laboratory.

B.2.3 Research Staff Office: Where possible, laboratory staff should be provided with desk space that is physically separated from the laboratory bench. This work space should be within the laboratory.

B.2.4 Laboratory Administrative Areas: Administrative office areas shall be adequate to provide space for administrative staff. These areas are outside the laboratory, in a quiet, aesthetic environment that is sized appropriately. Administrative and clerical support areas should be provided with adequate storage for files, records, and office equipment.

B.2.5 Ancillary Spaces: Ancillary space includes locker space, conference rooms, and break rooms. Ancillary space is very important to the overall function of a biomedical research facility because it provides opportunities for interaction and exchange of ideas.

B.2.6 Basic Biomedical Research Laboratory Space Planning: The primary occupants of the laboratory are researchers who spend more than 50 percent of their time in the laboratory. These may include scientists, lab technicians, visiting fellows, or students. A typical range of laboratory space per user is 17.50 m^2 based on four people per module to 31.26 m^2 based on two people per module, depending on the type of research, planning model, and shared resources in the facility. Considerations that affect the space planning include number of containment devices, relationship of lab to animal research functions, radioactivity and biohazard

requirements, availability of meeting and conference space, and other lab support activities. Consultation with the principal investigator early in the planning process is critical to determining the required scientific work space.

B.2.6.1 General Rules of Thumb for Planning Basic Biomedical Research Laboratories: The following table shows general rules of thumb to be used in planning laboratories for budget purposes, or when a laboratory program has not been developed. The data assume two persons per module. The lab support area is based on 50 percent of the laboratory work space.

Table B.2.6.1 Space Utilization

Space	Area (m^2)
Laboratory work space	16.50
Laboratory support space	8.25
Research staff office	2.79
Ancillary space	0.84
Laboratory administration	2.88
Optimal area per researcher assigned bench space	31.26

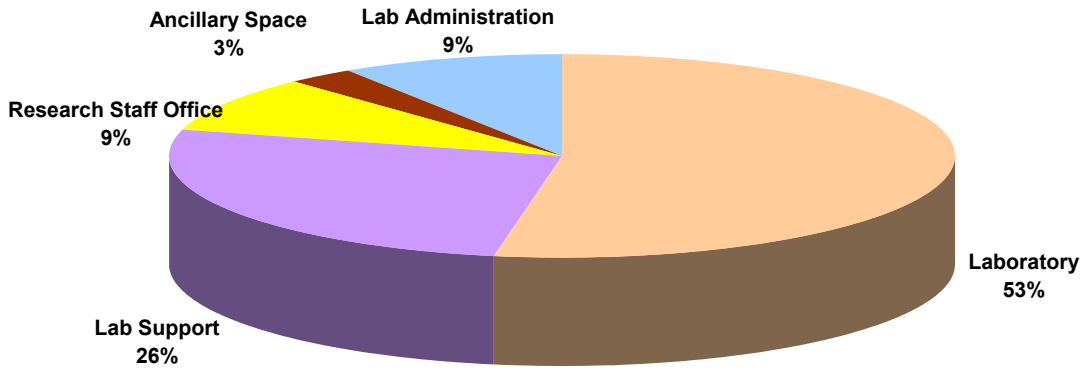

Figure B.2.6.1 Space Utilization
(Based on Percentage of Total Optimal Area [31.26 m^2 per Researcher])

These rules of thumb do not take into account levels of seniority. They also do not include areas for special function labs such as nuclear magnetic resonance (NMR) or laser labs and do not include animal facilities. Areas for these functions must be added to and considered in the overall budget and program formulation.

B.2.7 Area Allowances: The following calculations are for the purposes of design and construction and not to determine real estate space allocations for the purposes of charging rent. See Volume: Appendices for information on methodology used to calculate gross and net area.

B.2.7.1 Grossing Factor: For budget purposes, the gross building area generally includes the total area of all floors, including basements, mezzanines, penthouses, mechanical, electrical, and communications spaces, and enclosed loading docks. The gross building area will exceed the net area by a grossing factor. A range is given for these factors, depending on design choices for internal circulation patterns, interior partitions, utility distribution, and mechanical equipment configurations. For research laboratories, a grossing factor of 1.54 to 2.00 is typical.

B.3 Flexibility and Adaptability

Laboratory facilities must be adaptable and flexible. This concept encourages development of generic spaces that have the ability to accommodate changes in function (within the same space category) without requiring significant physical or infrastructure changes to the space itself. Excessively and individually planned, nongeneric, or customized spaces should be avoided.

B.3.1 Services and Systems Distribution: Services must be uniformly and repetitively distributed to each laboratory and designed to provide simple extension into the laboratory without disruption to adjacent modules. Services may run overhead, in a service corridor, or in interstitial space to permit changes without requiring an upgrade to the building infrastructure, capacity, or major distribution systems. All building system components that require routine maintenance and repair shall be accessible without interrupting the day-to-day operations of the laboratory.

It is equally important that provisions be made for future utility services to accommodate unanticipated demands of new research protocols and technologies. Capacity should be designed to allow researchers flexibility to add equipment and

instrumentation to meet ever-changing needs without compromising laboratory health and safety.

B.3.2 Expansion Considerations: Designs for new research facilities shall include considerations for future expansion including horizontal and vertical expansion. Reserve capacity shall be planned into primary building systems to accommodate future growth and research mission changes within budgetary constraints. Building systems and plans shall be consistent with the current master plan.

B.3.3 Connection of Utilities to Laboratory Modules: Laboratory services must be distributed to each individual laboratory module, and the connection point of each service should be in a uniform position relative to the module and detailed to provide simple extension into the laboratory without disruption of adjacent modules. These services may run in service corridors or in interstitial space, allowing laboratories to change without increasing or upgrading capacity or the location of central infrastructure systems. Changes would be primarily to terminal systems, for example, piping and power connections to apparatus and equipment within the space.

B.4 Services and Systems Distribution Concepts

Utilities and services including communication and information systems should be organized into specific zones, both horizontally and vertically, to provide uniform distribution of systems and services to each lab module. This three-dimensional planning allows for ease of maintenance and access of services and provides for maximum operational flexibility. The choice of design and locations of the utility distribution system(s) is a product of utility function, cost-effectiveness, ease of access for maintenance, additional future services, and remodeling during the life of the laboratory. The following identifies several concepts that have been used on NIH campuses. The current trend is to use interstitial space, although there are advantages and disadvantages to each system.

B.4.1 Ceiling and Shaft: Vertical distribution of utility services is accommodated through shafts. Horizontal distribution is through ceiling space to the laboratory. Services are fed down to the work area or, in the case of waste, is collected horizontally and then fed down through a chase.

B.4.2 Multiple Internal Shafts: Distribution of utilities is provided through smaller vertical shafts. Horizontal distribution is through ceiling space.

B.4.3 Multiple Exterior Shafts: Distribution of utilities is provided through vertical shafts, with horizontal distribution through the ceiling space.

B.4.4 Utility Corridor: Distribution of utilities is provided through an internal dedicated corridor that accommodates maintenance staff access only.

B.4.5 Service Corridor: Laboratories adjoin an accessible corridor that houses overhead utility services, routed horizontally into the laboratory via the ceiling or through the laboratory wall. Vertical shafts are required for mechanical and piping systems. The clear width of the service corridor shall be 1 500 mm.

B.4.6 Interstitial Space: Interstitial space yields unobstructed open area for laboratory space and provides maximum adaptability of the laboratory space below. Horizontal distribution is through dedicated accessible floor space above the ceiling. Services drop vertically from the interstitial space into the laboratory. Centralized vertical shafts connect the interstitial space throughout the building. Interstitial space should be carefully designed in zones. The vertical zones consist of the following: structural zone, branch distribution zone (for utilities that are distributed through the floor such as waste lines), main distribution zone, branch distribution zone (for utilities that are distributed through the ceiling), and lateral distribution zone. The horizontal distribution zones consist of the following: electrical/communications zone, supply air zone, exhaust zone, plumbing/ fire protection sprinkler zone, and access zone.

B.5 Planning Module

Although many researchers have special laboratory design requirements, the NIH's goal is to establish an idealized common space denominator to meet a variety of research needs while allowing mechanical, plumbing, and electrical systems, partitions, and laboratory casework to be provided as required. A laboratory planned with modules permits safe, cost-effective modification of building systems when future alteration of the laboratory is required and allows principal investigators the maximum flexibility in setting up laboratories to suit the needs of their particular research program within a standardized building matrix.

B.5.1 Laboratory and Laboratory Support Module: The laboratory module is the basic conceptual building block and provides regularity and repetitiveness of area and services for the building. It must be carefully organized on a modular basis, free of stairwells, chases, shafts, shear walls, elevators, and other obstructions. The planning module must be properly sized so that larger units can be created by assembling a number of modules. This permits the rational creation of space and allows the standardization of mechanical/electrical/plumbing (MEP) systems that are accessible to each individual lab module. Figure B.5.1 illustrates various planning module layout possibilities.

The laboratory building is based on a planning module that is repetitive and regular, such as the 3 350 x 3 350 mm unit in the following diagram. This allows the rational creation of spaces that can accommodate a wide variety of laboratory and laboratory support functions.

Laboratory module widths are normally determined by an appropriate aisle width of 1 525 mm plus bench or equipment space equal to 914 mm on each side of this aisle. This dimension enhances flexibility, usability, and accessibility by all occupants of the facility.

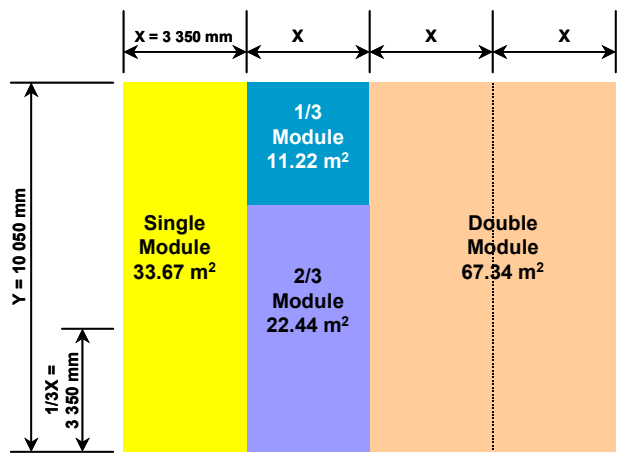

Figure B.5.1 Possible Laboratory Module Subdivision

The depth of a laboratory module is determined by the physical building constraints, the number of people who will work at the bench; the type and size of equipment to be placed in the work area, the amount of desk space, and placement and frequency of containment units such as fume hoods and biosafety cabinets. The ideal depth of the laboratory module is 10 050 mm. A typical configuration might include an investigator's desk of approximately 1 525 mm in length to provide ample work space. The bench should be developed in a modular fashion to permit interchangeability of components or substitution of equipment for bench elements. Above the bench, a system consisting of struts supporting flexible shelving or enclosed cabinets will provide interchangeability of storage elements.

B.5.2 Structural Bay Spacing: The building's structural system relates to the planning module. Major structural columns shall not intrude into laboratory space, and beams shall be located to minimize any impact with MEP systems. The structural system and column grid shall be designed to maximize the building's efficiency. Laboratory buildings will be designed to minimize vibrations. Refer to Biomedical Research Laboratories, Section: Design Criteria, and General Design Guidelines, Section: Structural, for specific requirements.

B.6 Planning Concepts

B.6.1 Laboratory Neighborhood Concept: The laboratory neighborhood concept, illustrated by Figure B.6.1, is an approach to planning the layout of a laboratory building that brings together in a single space all of the resources that the researcher uses on a daily basis. A laboratory neighborhood includes not just laboratories and lab support but also office and office support areas, supplies, and all shared equipment including computer equipment. Laboratory neighborhoods are expected to promote greater productivity, eliminate the need to duplicate expensive laboratory support space, and promote a sense of scientific community. Laboratory neighborhoods bring together 30 to 60 people, including perhaps 6 to 8 principal investigators plus their postdoctoral fellows and lab assistants, and various support functions. Laboratory neighborhoods should be clearly organized for ease of movement. Typically, laboratories are on the outside, with support space inside. Numerous cross-corridors or cross-lab rooms make it easy to move about in the neighborhood.

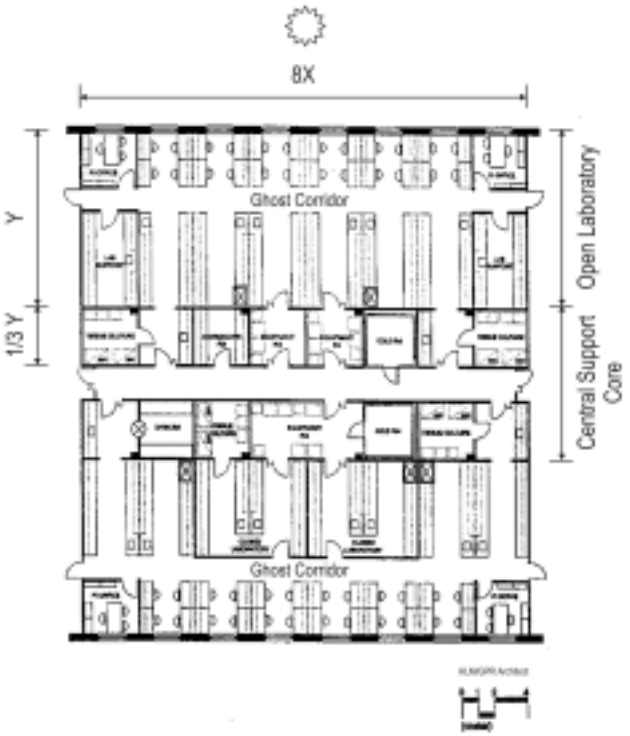

Figure B.6.1 Laboratory Neighborhood Concept Summary

B.6.2 Open Laboratories Concept: Open laboratories are laboratories without partitions. The open laboratory concept encourages interaction between researchers. Depending on the building's design, it can also enhance the laboratories' relationship to the outside environment by placing primary research space to the exterior of the building. It provides a flexible environment that can be easily organized in a generic and modular pattern. Physical barriers between researchers should be minimized to provide a climate for open communications.

B.6.3 Lab Central Support Core Concept: All laboratory support functions should be centrally located and accessible from both sides in the lab support core concept. This concept is very functional and efficient. It has a grossing factor that can range from 1.82 to 1.67. Material and service traffic can be segregated from personnel traffic. The lab support core concept is well suited for research that is instrument intensive.

B.6.4 Ghost Corridors: "Ghost corridors" are aisles that connect laboratories and improve communications in a laboratory neighborhood. In some recently constructed laboratories, ghost corridors run through one side of the laboratory. Ghost corridors provide secondary emergency exits for the laboratories; however, they are not the primary fire or emergency exits. Labs can be separated easily by installing partitions and doors across the ghost corridor. This preserves the secondary exit from the lab but allows separation of labs with incompatible functions. Ghost corridors allow people, equipment, and samples to move easily between labs. Lab suites of three to four labs (which might be used by one group working under a principal investigator) can be easily grouped together.

B.6.5 Laboratory Pod Concept: The laboratory pod, illustrated by Figure B.6.5, is a variation of the neighborhood concept. The pod has high-intensity mechanical support and lab support functions located at the center. The laboratory bench area surrounds lab support functions and the desks are located on the perimeter. This concept maximizes the use of natural light and allows for the concentration and efficient use of the building's mechanical systems. It also allows for structural flexibility, with the heaviest loads concentrated at the center of the pod carrying the equipment. This allows for longer spans in the bench and desk areas, thus providing more open space without the intrusion of structural columns.

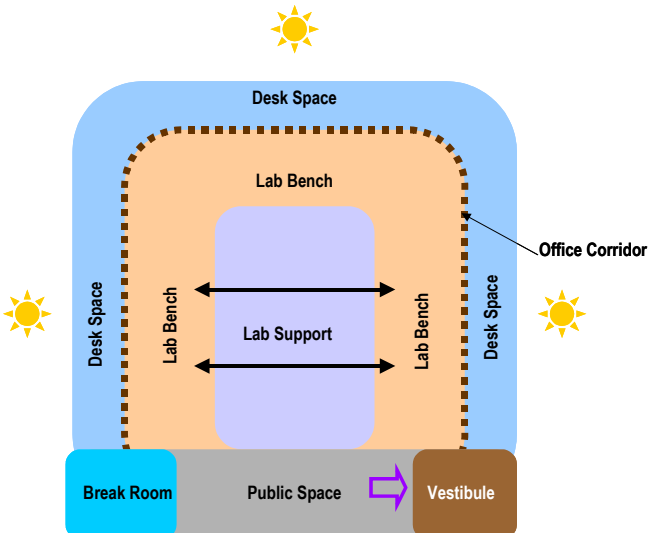

Laboratory Neighborhood Concept

Figure B.6.5 Laboratory Pod Concept

B.6.6 Materials Management: In laboratory areas, material movement will occur in common corridors. If a service corridor is provided, it should be sized to accommodate materials movement within that area.

B.6.7 Open Stairways: Open stairways reduce barriers to communication between occupants who are on separate floors. However, the open stair must provide adequate fire separation.

B.6.8 Cyber Café: Cyber cafés are a response to the age of computer communication, rapid information retrieval, and multitasking. A cyber café is a multipurpose space containing computer hookups for laptops at desks or tables, a refreshment bar, and informal meeting space. These areas foster interaction among building occupants and draw in others from outside the building.

B.6.9 Library/Reading Room: Libraries are no longer as popular or as necessary as they once were with the advent of online journals. However, there still may be a desire for a reading room where current hard copy journals are kept. The library room should be a quiet, comfortable, well-lit space with adequate perimeter shelving for books and journals.

B.7 Functional Relationships and Zoning of the Laboratory Building

In planning a laboratory, the designer must address the relationships of all related functions or activities. By combining similar types of functions in zones, the building becomes more efficient. The following points can be used as a guide to determine space and functional relationships when planning a laboratory.

1. Define the organizational structure or the general functional philosophy of the proposed occupants.
2. Define the levels of interaction required by the functional philosophy. Diagram the proposed interactions to determine their efficacy.
3. Determine waste and material handling movement requirements for the individual work zones. Identify safety and health hazard issues that must be addressed in planning.
4. Determine specific laboratory support adjacency requirements for each laboratory zone.
5. Define office adjacencies to laboratory work space.
6. Determine which laboratory spaces will need "isolated" work zones that may require special mechanical services.

In addition to determining the types and degree of adjacencies, it is essential to obtain the following information when planning flexible and adaptable work spaces.

1. MEP requirements
2. Fire protection requirements
3. Biohazard and radiation safety requirements
4. Chemicals used
5. Major scientific equipment to be installed including environmental rooms
6. Density of fume hoods
7. Building population
8. Number of workstations
9. Types of nonstandard workstations such as electrophysiology rigs

B.7.1 Planning Diagrams: The planning diagrams describe in graphic form the basic planning zones for modular development and relationships between laboratory zones, office zones, desk zones, corridors, and support zones. These are

diagrammatic only and must be adapted to requirements of the specific building's program of requirements, site constraints, and user requirements.

B.7.1.1 Laboratory and Laboratory Support Concept: The planning of a laboratory building must address both relationships of functions and circulation. Figure B.7.1.1 illustrates primary personnel circulation between the lab and lab support zone and the office zone. The central service corridor supports the laboratories and segregates the flow of people and materials.

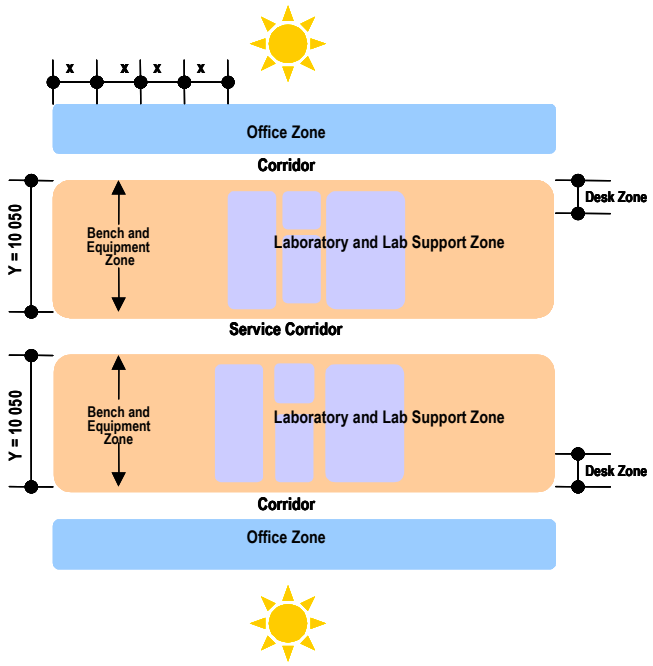

Figure B.7.1.1 Laboratory and Laboratory Support Concept

B.7.1.2 Laboratory Zones With Single Corridor: Figure B.7.1.2 illustrates a primary personnel corridor between the lab zones connecting to a central office zone. This central corridor supports the laboratories and the offices, combining the flow of people and materials. All spaces receive direct natural light.

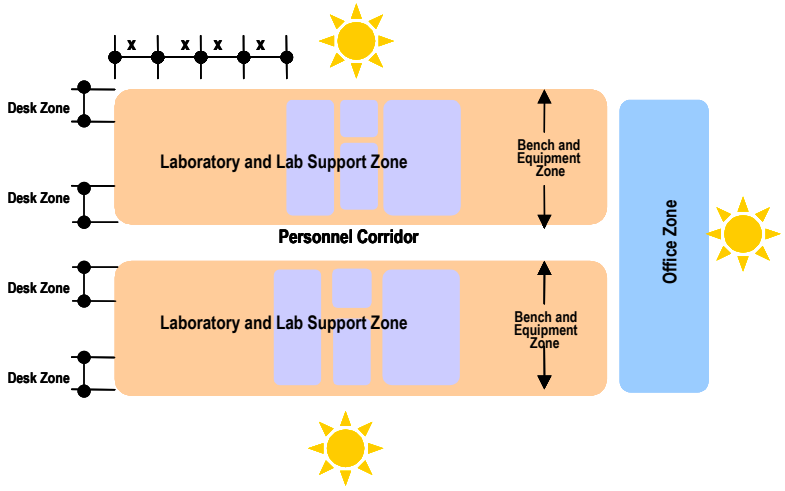

Figure B.7.1.2 Laboratory Zones With Single Corridor

B.7.1.3 Laboratory and Laboratory Support Zones With Single Corridor: Laboratory and laboratory support zones with single corridor is a double-loaded personnel corridor with a lab zone on one side and an office zone on the other side. This central corridor supports the laboratories and the offices, combining the flow of people and materials. All spaces receive natural light.

C. Space Descriptions

Laboratory types can be determined by the hazardous properties and quantities of material and equipment that will be used, the type and nature of work activities performed, and special requirements of the lab based on research being conducted that may have an adverse impact on safety and health either inside or outside the laboratory.

Laboratories involving research with biological materials are classified into four biosafety level (BSL) categories (BSL-1, BSL-2, BSL-3, BSL-4). These categories are outlined in detail in the Centers for Disease Control and Prevention (CDC)/NIH, *Biosafety in Microbiological and Biomedical Laboratories* and in Biomedical Research Laboratories, Section: Design Criteria. All NIH laboratories, at a minimum, shall be designed to meet BSL-2 containment requirements. The NIH Division of Safety must approve any BSL-3 or BSL-4 laboratories.

Biomedical laboratories include, but are not limited to, biology, biochemistry, cell biology, microscopy, molecular biology, virology, immunology, physiology, pathology, and clinical research. Personnel doing biomedical research generally need to have easy access to live research subjects such as animals in animal research facilities and human subjects in clinics. NIH laboratories are generally classified as wet or dry.

C.1 Wet Laboratories

Wet laboratories house functions that include working with solutions or biological materials and utilize benches, sinks, chemical fume hoods, and biosafety cabinets (BSCs). Generally, a wet lab is fitted out with a full range of piped services such as deionized or reverse-osmosis (RO) water, lab cold and hot water, lab waste/vents, carbon dioxide (CO_2), vacuum, compressed air, eyewash, safety showers, natural gas, telephone, local area network (LAN), and power. Any wet laboratory where biological specimens are used will require an area to store medical pathologic waste (MPW). Sufficient kneehole space must be provided in each laboratory module to accommodate in-use MPW boxes as well as other in-use waste receptacles. Design consideration should be made for accommodation of these boxes. Laboratories that use radioactive materials will require a storage area for multiple radioactive waste

containers including dry and liquid waste. Access to wet and dry ice is required for most biomedical research.

Work areas and desk space require low bench space with kneeholes or adjustable, flexible desktop space. These areas may be used for a large number of computers and may require HVAC, supplemental cooling, electricity, emergency or uninterruptible power, and telecommunications/LAN.

C.1.1 Biochemistry: Biochemistry is the study of the chemical, molecular, and physical changes that occur within living organisms. The laboratories described in this section include those whose functions are mostly biochemical in nature. Large equipment used in biochemistry laboratories include multiple refrigerators and freezers (-20 °C, -70 °C, and -135 °C), possibly some undercounter refrigerators, and a large number of benchtop and floor model centrifuges that may require single-phase 208 V, 30 A service. Connections for reverse-osmosis water should be available at each sink with a shelf and outlet for a water-polishing unit. Benchtop space is needed for many pieces of smaller equipment that might include multiple water baths, mass spectrophotometers, and balances. Vacuum pumps may also be needed. Both flammable and nonflammable chemical storage space is required. Access to a 4 °C cold room, chemical fume hoods, BSCs, and a decontaminating autoclave may be required.

C.1.2 Molecular Biology: Molecular biology is the study of the physical and chemical makeup and development of biological systems at the molecular level. In addition to the requirements listed for a biochemistry lab, a molecular biology lab also requires nonautomatic defrost freezers for storage of restriction enzymes. Space may be needed for freestanding robotic instruments. A great deal of bench space for equipment such as tabletop centrifuges, water baths, sequencers, protein synthesizers, thermocyclers for PCR reactions, pipette equipment, and robotic analysis equipment is required. Access to environmental rooms, bacteriological incubators, shakers, a darkroom with an automatic film processor, microscopes, and microscope table with kneehole may be needed. Radioactivity of different types and concentrations are used in molecular biology labs. Shared isolated rooms to manipulate radioactivity may be required.

C.1.3 Cell Biology: Cell biology is the study of the structure, function, and development of individual living cells and their relationship to other living cells. Cell biology laboratories require tissue culture rooms in addition to laboratory bench space to conduct research experiments. In addition to the requirements listed for a

biochemistry lab, a cell biology lab requires access to BSCs with high/low CO_2 incubators, autoclave, cold room, and bottled liquid nitrogen. Cell biology labs may be associated with tissue culture labs, molecular biology labs, and electrophysiology labs.

C.1.4 Tissue Culture Laboratory: A tissue culture laboratory is used primarily to support molecular biology and cell biology research. A tissue culture laboratory is often a shared space that includes multiple BSCs, multiple stacked CO_2 incubators with central CO_2 access as well as safety guarded storage for backup CO_2 tanks, an adjacent sink, deep shelf storage space for plastic ware storage, a refrigerator in the room, a tabletop centrifuge, and a microscope bench. There should be a small amount of working bench space near the sink to prepare media. Easy access to ice rooms, cold room storage, large centrifuges, an autoclave, and liquid nitrogen freezer storage is also required.

C.1.5 Pathology: Pathology includes the disciplines of histology (tissue preparation and examination), hematology, chemistry, serology, virology, and immunology. Any or all of these disciplines may be used in conjunction with cell biology labs or molecular biology labs in addition to lab functions related to an animal facility or a clinical facility. Many types of analytical instruments are used in a pathology lab. In addition to the requirements listed for a biochemistry lab, access to an autoclave is also required. A downdraft table may be needed. In addition to standing-height bench space, low bench space with kneeholes will be needed for microscopes.

C.1.6 Anaerobic Chamber: An anaerobic chamber is an airtight bacteriologic cell culture laboratory that mimics an oxygen-free environment. Old versions were specially constructed steel chambers with an adjacent control and monitoring room and a small cold room located within the chamber. Anaerobic chamber rooms are rarely used anymore.

A less expensive alternative is a self-contained windowed anaerobic chamber glove box that has external controls. A source of nitrogen and hydrogen is required to create the appropriate internal anaerobic atmosphere. Sound control for vacuum pumps and nitrogen recirculation blowers is required.

C.1.7 Fermenter: The fermenter is used for the production of bacteriological cultures that may generate odors, vibration, spills, and other wet problems. Therefore, consideration should be given to avoiding locations above occupied space. In addition to the fermenter, the space must accommodate computer components and

centrifuges. A fermenter prep laboratory is a typical biochemistry laboratory with a cold room and/or a warm room located adjacent to the fermenter.

C.1.8 Organic Chemistry: Organic chemistry is the study of carbon compounds. All biological material is made up of carbon compounds. Flammable substances, solvents, and highly odiferous chemicals may be used in an organic chemistry lab. In addition to the requirements listed for a biochemistry lab, a chemical fume hood for each investigator is desirable. Cleanup sinks with a means of ventilation and acid-resistant waste piping are required. Areas for storage and distribution of gas cylinders that are easily accessible to the laboratory through a central or manifolded system are required. Flammable and nonflammable and hazardous chemical storage areas are required. Materials used in an organic chemistry laboratory should be corrosion resistant. Countertops, sinks, and drain, waste, and vent (DWV) should be acid and solvent-proof.

C.1.9 Physical Chemistry: Physical chemistry involves the analysis of the physical properties and behavior of chemical systems. Materials used in a physical chemistry laboratory are similar to those used in an organic chemistry laboratory. A physical chemistry laboratory typically has large electrical demands for equipment. Power ranges from 110 V and 208 V up to 480 V. Increased floor-loading capacities and higher ceilings may be required for special equipment. Floor space for equipment, generally accessible from four sides, is often required. The floor space is occupied by complex machinery, some of which may require direct piped services such as cryogenic gases as well as electrical power. Services associated with physical chemistry laboratories are lab cold and hot water, deionized water, DWV, vacuum, compressed air, nitrogen, gas, and electrical power. In addition, the services might include a means to distribute a cooling water system, liquid nitrogen, and high-pressure air.

C.1.10 Summary Space Schedule for Wet Laboratories:

Table C.1.10 Summary Space Schedule for Wet Laboratories

Space Name	Area per Person* (m^2)	Equipment/Furniture and Requirements	Height (mm)
C.1.1 Biochemistry	16.50	**Equipment/furniture:** Fume hood or BSC, epoxy sink with eyewash, drying racks, tall storage cabinet, cylinder restraints, casework with acid-proof work surfaces with shelves, refrigerator, freezer, undercounter refrigerators, flammable-liquid storage cabinet, benchtop centrifuges, desk and chair, recycle bins, and safety shower.	2 850
C.1.2 Molecular Biology	16.50	**Equipment/furniture:** Fume hood or BSC, epoxy sink with eyewash, drying racks, tall storage cabinet, cylinder restraints, casework with acid-proof work surfaces with shelves, refrigerator, freezer, flammable liquid storage cabinet, desk and chair, recycle bins, and safety shower. In addition, provide for incubators and shakers, freezers, and dry and liquid waste storage with Plexiglas shielding for radioisotope waste. Space may be needed for freestanding robotic instruments.	2 850
C.1.3 Cell Biology	16.50	**Equipment/furniture:** BSC, epoxy sinks with eyewash, drying racks, tall storage cabinet, casework with low bench, deep shelves, acid-proof work surfaces, two refrigerators and freezers, and flammable-liquid storage cabinet.	2 850
C.1.4 Tissue Culture Laboratory		**Equipment/furniture:** BSCs, multiple stacked CO_2 incubators with central CO_2 backup CO_2 tanks, an adjacent sink, deep shelf storage space for plastic ware storage, a refrigerator in the room, a tabletop centrifuge, and a microscope bench. There should be a small amount of working bench space near the sink to prepare media.	2 850

Space Name	Area per Person* (m^2)	Equipment/Furniture and Requirements	Height (mm)
C.1.5 Pathology	16.50	**Equipment/furniture:** Fume hood or BSC, epoxy sink with eyewash, drying racks, tall storage cabinet, cylinder restraints, casework with acid-proof work surfaces with shelves, refrigerator, freezer, undercounter refrigerators, flammable-liquid storage cabinet, benchtop centrifuges, down-draft tables, desk and chair, recycle bins, and safety shower.	2 850
C.1.6 Anaerobic Chamber	Equipment determines size.	**Equipment:** Self-contained window anaerobic chamber glove box, storage space for gas tanks and other wet lab equipment as needed.	Equipment determines height.
C.1.7 Fermenter	Equipment determines size.	**Equipment:** Specially constructed fermenter, computer components, and centrifuges.	Equipment determines height.
C.1.8 Organic Chemistry	16.50	**Equipment/furniture:** Fume hood/investigator, epoxy sink with eyewash, drying racks, tall storage cabinet, cylinder restraints, casework with epoxy countertops, acid-proof work surfaces with shelves, refrigerator, freezer, flammable-liquid storage cabinet, desk and chair, and safety shower.	2 850
C.1.9 Physical Chemistry	16.50	**Equipment:** Provide for several pieces of large equipment with special electrical and HVAC requirements. Provide for heavy floor loading and high ceiling clearance.	Equipment determines height.

*Scientist or other personnel. The area in the schedule is based on two scientists per module.

C.2 Dry Laboratories

Dry laboratories involve work with computers, electronics, and large instruments. These laboratories are typically analytical laboratories that utilize sophisticated, highly calibrated electronic equipment in spaces that require accurate temperature and humidity control, stable structure and vibration control, shielded space, clean power, and filtered chilled water. These laboratories do not require extensive piped services or built-in fixed casework. Floor loading and ceiling heights are equipment driven. Access must be planned for routine maintenance, repair, or calibration of equipment. Examples of dry laboratories are computer and analytical areas, electron microscope rooms, bioengineering laboratories, and imaging rooms.

C.3 Combination Wet/Dry Laboratories and Special Function Laboratories

Most laboratories at the NIH are a combination of wet and dry laboratory space. Many special-function laboratories require specialized analytical or observation space that is dry lab in nature. However, sample preparation is usually done in an adjacent wet lab.

The instrument is the important element in an instrument laboratory. The instrument size and type, rather than personnel or bench needs, will often determine the size of the laboratory. Increased floor-loading capacities and higher ceilings may be required for special equipment. Evaluation of the instrument should be done during the programmatic phase of design to ensure that there is no adverse impact by grouping the special-function laboratories together. Special-function laboratories include but are not limited to areas that house the following instruments: confocal microscopes, electron microscopes, electrophysiology racks, electron spin resonance spectroscopes, fermenters, flow cytometers or cell sorters, lasers, mass spectrometers, nuclear magnetic resonance imaging equipment, and x-ray crystallographers.

Finely calibrated electronic equipment may require accurate instrument-dependent temperature control, rigid vibration or local vibration dampening control, and the availability of “clean” electrical power. Vibration control is critical for most special-function laboratories. Those laboratories that are vibration sensitive should be grouped together wherever possible in the overall design of the facility. It is important that the laboratory be designed to provide easy access to the apparatus for maintenance and/or calibration.

C.3.1 Electrophysiology/Biophysics: Electrophysiology laboratories are concerned with the study of electric impulses through tissues or cells. Electrophysiology laboratories can be either an instrument (dry) laboratory or a wet laboratory. Electrophysiology laboratories are electronics intensive. These laboratories must be vibration stable so as not to compromise highly sensitive experiments. Heavy vibration-stabilizing air tables may be needed, but ideally a high degree of structural vibration stability is required.

Lighting controls are required. Darkrooms or light-tight rooms may be required as either adjacent space or actual working space and should be determined with the user. Imaging rooms will be associated with the electrophysiology area. The imaging

rooms may have special requirements such as attachment grids at the ceiling. The room may need to be painted black. Imaging rooms will contain optical tables that will require wider light-tight doors in order to get the tables into the room. Special ventilation is needed in these labs to distribute airflow to minimize flux/area.

Typically, a large number of electronic racks will be needed with minimal bench space. However, a wet lab prep room for dissection and terminal surgery should be adjacent to the electronic rack area. The surgery will require downdraft tables, fume hoods, bench areas with air, gas, and vacuum, and sinks with RO water, High-pressure compressed air and nitrogen may be required. Electric power may require isolation transformers and/or special grounding. Services may include nitrogen, other gases, and high-pressure compressed air. Some of the instruments used in an electrophysiology lab include microscopes, air tables, recording electronics, oscilloscopes, micromanipulators, recording pipette fabricators, vibrotomes for slicing, cameras, balances, confocal scanners, and high power lasers.

C.3.2 Electron Microscope: Electron microscope (EM) laboratories are concerned with evaluating tissues and/or cultures at the subcellular and molecular levels as well as imaging of atomic structures, viruses, and their components. The laboratory typically will be centered on the microscope itself, which must be housed in a closed room. A higher ceiling will be required for equipment. Immediately adjacent space is required for microscope components such as chillers, compressors, pumps, and so on that are noisy and/or dirty, as well as for ancillary equipment such as vacuum evaporators with similar operating characteristics that dictate isolation. Adjacent space is also required for the preparation of fragile or sensitive specimens (such as cryospecimens), for ultramicrotomy, or both. An additional sample preparation area, essentially a biochemistry laboratory with fume hood, is needed to support chemical aspects (fixation, staining, embedding, etc.) of specimen preparation. In most cases, the EM laboratory will further be associated with a typical biochemistry, physiology, or molecular biology lab. Lastly, the lab will require easy access to a negative and print darkroom and to a graphics/print layout room that increasingly will be a computer graphics space.

The EM must be isolated from electromagnetic fields such as elevators and from vibration. Low-impedance clean ground power supply to the microscope should be provided. High-voltage, multiphase electric services may be required. LAN connections to network computers supporting the EM are required. Cooling water supply and return (both city and house chilled) for equipment are normally required. The EM laboratory must be light tight with variable room lighting; heavy,

concentrated floor loading must be accommodated. Humidity and temperature control may be required, and air distribution around the microscope is critical to equipment performance. Laminar airflow is preferred; other methods may be used as long as air is not directed toward the column. Provision should be made for storage and distribution of cylinder gases and liquid nitrogen within the lab or immediately outside the lab.

C.3.3 Confocal Microscope: The confocal microscope employs a laser and an optical path using a pinhole to remove out-of-focus fluorescence. This results in images with extra-ordinarily shallow depth of field that can be used to generate three-dimensional image reconstructions of specimens. To function optimally, the room housing the confocal microscope must have space for both computers to analyze the fluorescence information obtained by the microscope and VCRs to collect and store confocal information. Such a facility requires a graphics and printing area and an area for sample preparation.

Confocal microscopes can be placed on an isolation air table and should be located in an area isolated from vibrations. The confocal microscope room must be properly ventilated to avoid buildup of ozone generated from the microscope's laser and mercury lamps.

C.3.4 Laser Laboratories: Laser laboratories are concerned with utilizing concentrated light to study and evaluate a wide range of biomedical research such as reaction of light in cells and compounds. A laser suite might include the laboratory housing the instrumentation, office space, and an equipment room. A sample preparation area must support the laser laboratory. The sample preparation area is an organic chemistry laboratory that will include a fume hood. The laser laboratory must be isolated from vibration; it must be light tight; heavy concentrated floor loads must be accommodated; provision should be made for storage and distribution of cylinder gases within the lab or outside the lab; and high-voltage electric services may also be required. Rooms where laser equipment is used must be properly ventilated to avoid buildup of ozone generated from the laser and mercury lamps.

C.3.5 Electromagnetic Instruments: Magnetic Resonance Imaging (MRI), Nuclear Magnetic Resonance (NMR), and Electron Spin Resonance Spectroscopy (ESRS): MRI, NMR, ESRS, and other high-powered magnets that are used to create images of living specimens have very specialized requirements. The designer must work closely with the end users and the manufacturers to determine the details for the instruments to be placed in these spaces. The magnetic fields (gauss fields) created when some of these instruments are in use must be shielded from other equipment and from the users. Nonferrous partitions must be provided within the magnetic field, and specialized exhaust venting should be considered. Electromagnetic Instruments must be isolated away from electro-magnetic fields such as elevators. Special acoustical design features may be required to mitigate the transfer of sound and vibration through the structure to adjacent areas.

Pits may be needed for the larger pieces of equipment. Access and clearance, both vertical and horizontal, around the equipment must be carefully planned for both equipment requirements and delivery. The weight and size of these instruments may require that they be lowered into their resting place by crane and through a specially designed well outside the footprint of the facility. Alternatively, wide access doors should be provided and tracks may be required to slide the units into place. Special cooling requirements will be determined on the basis of the specifications of the instrument.

Electromagnetic suites may include cold rooms, computer work areas, storage for gas cylinders, and a subject and sample preparation space. Office space may be required within the suite.

C.3.6 X-Ray Crystallography: X-ray crystallography laboratories are used to study three-dimensional properties of molecules and compounds and the structure of proteins and nucleic acids at the atomic level. The laboratory will require light, temperature, and humidity controls. A suite may include a basic biochemistry laboratory with a fume hood for protein purification and crystal growing. A darkroom and computer graphics/modeling room, office space, tape storage area, and computer room will also be needed. Vibration isolation, cooling water supply, and return to specialty equipment may be required, and electrical low-impedance and clean ground should be provided.

C.3.7 Mass Spectrophotometry (MS): Spectrophotometry is the process by which the ability of atoms to either absorb or emit light is measured. The MS laboratory will feature a sample preparation laboratory (chemistry laboratory or an instrument laboratory) that houses the mass spectrometer, computers, consoles, and so on.

Vibration isolation and a clean electrical ground may be required. Stray magnetic fields may affect equipment performance. High noise levels are generated in these labs by vacuum pumps. Noise reduction and isolation methods should be provided wherever possible. Provision should be made for storage and distribution of cylinder gases within the lab or from outside the lab. Local exhaust at equipment may be required.

C.3.8 Flow Cytometry: Flow cytometric analysis consists of pushing cells (one by one), under pressure, through a small orifice so they can be passed in front of one or two laser beams. These lasers are designed to emit specific wavelengths of light and can be used to excite fluorescent molecules on the cells. The resulting fluorescence can be measured using photomultiplier tubes and converted to electrical impulses that are stored on computers for analysis of data.

A flow cytometer or cell sorter (fluorescence-activated cell sorter, or FACS) is a freestanding instrument that can be housed in an equipment room along with its associated equipment such as computers, microscope, fume hood, temperature-controlled water circulators, and refrigerators. Because of the heat generated by the lasers and computers, adequate cooling of the lab is essential.

C.3.9 Robotic Equipment Rooms: A large percentage of laboratory equipment is robotic. Robotic equipment is designed to eliminate human error and the monotony of performing repetitive tasks. Robots are able to process hundreds if not thousands of repetitive micromanipulations and sample transfers in short periods of time. Some robotic equipment such as a PCR thermocycler can be placed on a benchtop. Many laboratories have a large number of thermocyclers or other relatively small pieces of equipment that are used simultaneously. Total power capacity should be enhanced to allow for greater flexibility and increased future usage. User needs should be considered in planning the location and spacing of electrical outlets.

Most robots are compatible with standard-depth lab benches, although some robots housed on lab benches will require greater than standard depths. Other robots are very large, freestanding units that may require access from all sides and electrical connections from above or below.

In general, a room housing robots should have good control of temperature (about 20 °C) and humidity (about 50 percent). Robots that need better control than the room can provide have inboard units to regulate humidity. Large heat-generating refrigerators or freezers are often in the same room as the robots. This may complicate the heat control for the robots and should be taken into consideration in the planning process. Robotic laboratories require flexible RO water supply and waste plumbing installation because the robots have built-in automatic liquid supply systems. High-pressure air or vacuum may also be required.

Almost all robots are computer controlled. Some units have integrated CPU controllers within the instrument, while others have stand-alone systems. The laboratory should be designed with the flexibility to provide space near the robot for the stand-alone systems without using storage or bench space that is needed for other purposes.

Sequencers, which are usually benchtop size, may need venting, as do DNA and protein synthesizers. Most laboratory designs require that the laboratory be under negative pressure with respect to the outside rooms, corridors, or other public areas. The exception will be a room designed for genomic DNA analysis by PCR. When the program calls for a genomic analysis laboratory, it should be positive with respect to surrounding spaces. This is a critical element in genomic DNA analysis. Synthesizers also generate toxic waste that must be picked up and disposed of as chemical waste. Most other liquid-handling robots do not generate toxic waste. Some robots are very noisy when in operation and may require a dedicated room with acoustical separation.

C.3.10 Summary Space Schedule for Combination Wet/Dry Laboratories and Special Function Laboratories:

Table C.3.10 Summary Space Schedule for Combination Wet/Dry Laboratories and Special Function Laboratories

Space Name	Area per Person* (m^2)	Equipment/Furniture and Requirements	Height (mm)
C.3.1 Electrophysiology/ Biophysics Suite	16.50	**Equipment/furniture:** Electronic racks, desk, sink, eyewash emergency shower, flammable-liquid storage cabinet, radioactive storage and casework.	2 850

Space Name	Area per Person* (m^2)	Equipment/Furniture and Requirements	Height (mm)
C.3.2 Electron Microscope Laboratory Suite	Equipment determines size.	**Equipment:** Electron microscope, generator, power supply, water chiller, air compressor, and nitrogen.	2 850
C.3.3 Confocal Microscope Laboratory Suite	Equipment determines size.	**Equipment:** Confocal microscope, computers, and VCRs.	2 850
C.3.4 Laser Laboratory Suite	Equipment determines size.	**Equipment:** Lasers, sink, bench, and curtains.	2 850
C.3.5 Electromagnetic Instruments: MRI, NMR, ESRS Laboratory Suites	Equipment determines size.	**Equipment:** Magnet, console, terminal, and UPS.	4 000
C.3.6 X-Ray Crystallography Laboratory Suite	Equipment determines size.	**Equipment:** Rotating-anode generator with area detectors, rotating anode generator with cameras, small molecule diffractometer, and crystallization equipment. The computer room will be equipped with two microprocessors.	2 850
C.3.7 Mass Spectrophotometry Laboratory Suite	Equipment determines size.	**Equipment:** Mass spectrometer data system, line printer, cooling bath, and transformer.	2 850
C.3.8 Flow Cytometry Laboratory	Equipment determines size.	**Equipment:** Flow cytometer or cell sorter FACS computers, microscope, fume hood, temperature-controlled water circulators, and refrigerators.	2 850
C.3.9 Robotic Equipment Rooms	Equipment determines size.	**Equipment:** Large and small robotic equipment, PCR thermocyclers, other benchtop equipment, refrigerators, freezers, sequencers, synthesizers, sink, enhanced electrical power capacity, RO water, waste plumbing, air, and vacuum	2 850

*Scientist or other personnel. The area in the schedule is based on two scientists per module.

C.4 Laboratory Support

Laboratory support space shall be on the same planning module as the laboratory. It shall provide for activities that are not housed directly in the laboratory but are critical to the efficient operation of a laboratory. This space is often shared by multiple laboratories and includes areas such as autoclave rooms, environmental rooms, computer rooms, darkrooms, developing rooms, equipment areas, glass wash, bench support, radioactive work areas, ice rooms, and storage. Common-use lab support spaces and equipment shall provide accessibility to individuals with disabilities.

C.4.1 Autoclave/Sterilizer Room: An autoclave is an industrial appliance that uses pressurized steam to sterilize laboratory instruments, glassware, and other hard materials and to decontaminate infectious waste. When an ethylene oxide (ETO) sterilizer is required, the NIH Division of Safety must test and approve it. ETO sterilizers must be ventilated according to EPA standards, and manufacturer guidelines must be followed for installation. The autoclave area requires overhead exhaust, floor drains, power, hot/cold water, steam and condensate return lines, heating, ventilation, and air conditioning (HVAC), and drain, waste, and vent (DWV). Autoclaves come in a variety of sizes and models including those that have pass-through capability. The size and type of the autoclave should be determined by the specific function for the area and by the anticipated frequency of use. Decontamination autoclaves should have adjacent waste storage space. Glassware autoclaves should have associated marshalling and glassware storage areas nearby. All finishes must be moisture resistant. Doors to the room must accommodate large-equipment sizes.

C.4.2 Glass Wash: The glass wash area should provide space for either an industrial-sized unit or an undercounter glass wash unit depending on the needs of the facility. Glass wash areas may be centralized to serve an entire building or floor. However, since so much laboratory ware is now disposable, there is less need for large glass wash facilities. Many labs are purchasing undercounter glass washers that can run small loads and do not require support staff to operate them. Storage for detergents must be provided.

Glass wash areas may be combined with autoclave functions because similar utilities are required. Marshalling areas for clean and dirty glassware, drying appliances, and carts are required. Counters should be stainless steel and on legs. A large sink and overhead exhaust are required.

All areas in a centralized glass washroom shall be thoroughly caulked and sealed and have a fixed ceiling, epoxy floors, and cleanable walls to withstand moisture and prevent pest infestation. Masonry or metal stud construction is appropriate. Epoxy-coated walls are required. Space must be provided for staging clean and dirty glassware. Utilities include HVAC with supplemental cooling, electricity, cold water, reverse osmosis, DWV, vacuum, telecommunications, and equipment alarm systems.

C.4.3 Controlled-Environment Rooms: Controlled-environment rooms are used for long-term experiments that are temperature controlled (warm or cold) or humidity-sensitive and often require instrument setups that are not easily moved, such as adsorption columns or chromatography gel apparati.

A cold room is an environmentally controlled prefabricated unit usually operated at 4 °C. A warm room is an environmentally controlled prefabricated unit often used for growing cell cultures, usually at 37 °C at a constant temperature and humidity. Controlled-environment rooms are available with variable temperature ranges and can be adjusted for use as either cold or warm rooms.

Controlled-environment rooms should have stainless steel counters on legs, wire shelves, and a stainless steel sink. Utilities include power, vacuum, and mechanical ventilation, filtered water, and fire alarm strobe light. Natural gas may be required depending on program needs. Requirements for compressed air, gas, and vacuum shall be verified during programming. A sink is sometimes required. Temperature-controlled rooms shall be lockable, and all mechanical components shall be accessible and serviceable from outside the room. A high- and low-temperature monitoring and alarm system shall be connected to a central equipment alarm system. Provide emergency exhaust capability.

C.4.4 Computer Mainframe Area: This area supports computer mainframes or processors. Access flooring may be required. HVAC, electricity, special power, emergency power, uninterruptible power, and telecommunications/LAN systems will be required. Supplemental cooling may also be required.

C.4.5 Darkroom (Working or Developing): This area will have casework, counters, worktables, and a sink. All doors, walls, ceilings, and penetrations must be light tight. Darkrooms should have an infrared light that can be used when film must be exposed. Utilities include HVAC, electricity, hot/cold and chilled water, DWV, compressed air, gas, vacuum, spot exhaust, telecommunications, and reverse-

osmosis water. Requirements for compressed air, gas, and vacuum shall be verified during programming. An electrolytic or cartridge silver recovery system shall be provided in darkrooms with automated processors such as an XOMat. Darkroom-in-use indicators must be provided outside this space.

Entrances to darkrooms and the internal layout of the darkrooms must provide access to individuals with disabilities. Based on some facility layouts, multiple darkrooms may be provided within lab support spaces. In this case, at least one accessible darkroom must be provided. Where only one darkroom is planned, it shall be accessible to individuals with disabilities.

C.4.6 Freestanding Equipment Areas: Freestanding equipment areas will provide space for shared equipment that may have high-heat loads and high noise levels, such as large freezers (-70 °C) and refrigerators, ultracentrifuges, and cell sorters. Utilities include HVAC with supplemental cooling, electricity, cold water, DWV, vacuum, telecommunications, and equipment alarm systems.

C.4.7 Bench Lab Support: High-bench lab support rooms provide space for common use or specialized equipment such as DNA sequencers and synthesizers, spectrophotometers, isotope counters, and other robotic analyzers. Low-bench lab support rooms provide shared space for microscopes, computer terminals, common desk space, or tall instruments. Both high-bench and low-bench rooms, or shared rooms with a combination of both types of bench space, will have a sink, eyewash, and emergency shower in accordance with Division of Safety requirements. In addition to the standard provision of utilities, compressed air, gas, spot exhaust, nitrogen, reverse-osmosis water, and telecommunications/LAN will be supplied.

C.4.8 Radioactive Work Area: This area provides space for isolated radiation work. It will have access to a chemical fume hood and an emergency shower. It shall have a sink, eyewash, and flammable solvent storage cabinet. Space must be provided for storage of wet and dry radioactive waste containers of different types. Utilities needed include HVAC, power, vacuum, compressed air, gas, hot/cold water, DWV, nitrogen, telecommunications, and reverse-osmosis water.

C.4.9 Standard Ice Support Room: In addition to housing ice machines and dry ice boxes, these storage areas may also house liquid nitrogen freezers and liquid nitrogen cylinders. This room shall be located near a freight elevator and be provided with HVAC, supplemental cooling, power, floor drain, and cold water.

C.4.10 General Storage Room: This room has shelving or lockable storage cubicles with "wire-bar"-type, easily cleanable shelving. Special utilities are not required.

C.4.11 Instrument Repair: Space should be provided for a customized instrument fabrication and repair shop. The space shall include countertops or work surfaces to fabricate and repair small customized laboratory instruments or devices. Limited floor space should also be provided to fabricate and repair larger instruments. Adequate space for tools and materials should be provided.

C.4.12 Summary Space Schedule for Laboratory Support:

Table C.4.12 Summary Space Schedule for Laboratory Support

Space Name	Area per Person* (m^2)	Equipment/Furniture and Requirements	Height (mm)
C.4.1 Autoclave/ Sterilizer Room	Equipment determines size of space.	Autoclave or sterilizer.	2 850
C.4.2 Glass Wash Area	Equipment determines size of space.	Glassware washers, glassware dryers, sterilizer (autoclave) stainless steel counters with double bowl sink, tall cabinets, and overhead exhaust.	2 850
C.4.3 Controlled-Environment Rooms	Equipment determines size of space.	Prefabricated unit, stainless steel wire shelves, stainless steel countertop, uni-strut support, and flex-a-frame. **Do not use metal casework other than stainless steel.**	Equipment determines height of space.
C.4.4 Computer Mainframe Area	Equipment determines size of space.	Mainframe or microprocessor, file server, LAN equipment, monitors, etc.	2 850
C.4.5 Darkroom	Equipment determines size of space.	Photo development equipment, plastic laminate counters, shelves, roll film dryer, enlarging station, refrigerator, and film processing sink with chiller.	2 850
C.4.6 Freestanding Equipment Area	Equipment determines size of space.	Freezers, centrifuges, and other noise and heat-generating equipment, casework with epoxy countertops, and sink.	2 850
C.4.7 Bench Lab Support Rooms	9.3	Sink with eyewash and high benches or low benches.	2 850

Space Name	Area per Person* (m^2)	Equipment/Furniture and Requirements	Height (mm)
C.4.8 Radioactive Work Area	16.5	Fume hood, sink with eyewash, emergency shower flammable storage cabinets, and casework.	2 850
C.4.9 Standard Ice Support Rooms	Equipment determines size of space.	Liquid nitrogen freezer, liquid nitrogen cylinders, wet ice machine, and dry ice box.	2 850
C.4.10 General Storage Room	As required	Shelving, lockable storage cubicles with wire-bar-type shelving that is easily cleanable.	2 850
C.4.11 Instrument Repair Area	11.25	Countertops, chairs, stools, shelves, and storage bins.	2 400

*Scientist or other personnel. The area in the schedule is based on two scientists per module.

C.5 Administrative, Interaction, and Ancillary Space

C.5.1 Offices: Offices should be positioned to achieve close proximity to the occupant's laboratory work space. Laboratory chiefs, section chiefs, principal investigators, and senior scientists should be provided with private offices wherever possible. If feasible, offices should be provided with natural light. Semi-private offices may be provided for postdoctoral fellows. Open office space should be provided for clerical personnel. Desk and storage space for laboratory technicians is usually in open areas adjacent to lab benches and should include provisions for privacy. Consideration may be given to clustering offices in order to have potential for sharing support staff. Storage requirements must be considered for records/files, copiers, and mail areas. Ergonomic furniture should be used in the office.

C.5.2 Lockers: Personal space within the context of an open laboratory is much less private and secure than in conventional, enclosed laboratory space. Although there is the option of installing locks on casework doors and drawers, there is an immediate need to provide space for employees to store personal belongings, including food and coats, outside the laboratory. Lockers may be built-in and located in the corridors or in the break rooms. Lockers may also be located in a separate room.

C.5.3 Conference Rooms: Small conference rooms for 8 to 10 people shall be provided for formal and informal meetings of section staffs. Large conference rooms for up to 25 people will be provided for meetings of the laboratory staff. All conference facilities will be shared. Each space shall be equipped with white boards, outlets to accommodate audiovisual and projection equipment (laptop, slides, and overhead projectors), light dimming, and blackout control, as well as telecommunications/LAN capabilities. All conference rooms and meeting rooms shall include space for waste and recycling containers. These containers shall be adequately sized to support the occupancy of the space and be constructed of durable cleanable materials. They shall be accessible to permit ease of cleaning and servicing.

C.5.4 Break Rooms: Break rooms should permit the safe consumption of food and beverages outside the laboratory while creating an inviting area for interaction. These areas serve as lounges and small informal meeting spaces for the employees. Acoustical separation of these areas from surrounding spaces is required. All break rooms shall be equipped with a white board, tack board, table, and chairs. Some larger break rooms may also require a bookcase, cabinets, sink and countertops, microwave oven, and refrigerator. Lockable storage within a break room is desirable. All break rooms shall include space for waste and recycling containers. These containers shall be adequately sized to support the occupancy of the space and be constructed of durable cleanable materials. They shall be accessible to permit ease of cleaning and servicing. Furnishings used in a break room must be cleanable and promote good sanitation. A library or resource center could be combined with a conference or break room or be a separate entity. Provide a break area on each floor, or for each laboratory neighborhood.

C.5.5 Lactation Rooms: In support of the NIH Work and Family Initiative, a lactation room shall be provided. In new facilities, or where significant renovation is planned, these rooms may be colocated with a woman's rest room or independent spaces in common access areas. These rooms shall be lockable and provide space for a comfortable chair, small table, undercounter refrigerator, and hand-washing sink. Electrical outlets conveniently located near the table and chair must be provided.

C.5.6 Shower and Changing Areas: Personnel showers with changing areas should be provided for each sex. In renovations where this may not be possible, consider providing a unisex shower for employees. Shower and changing areas are typically adjacent to or colocated with rest rooms. Include lockers and changing benches, clothes hooks, and an electrical outlet adjacent to mirror and shelf. Shower

and changing areas shall be accessible to individuals with disabilities. Refer to the local plumbing code to determine the number of showers required based on building population.

C.5.7 Summary Space Schedule for Administrative, Interaction, and Ancillary Space:

Table C.5.7 Summary Space Schedule for Administrative, Interaction, and Ancillary Space

Space Name	Area per Person* (m^2)	Equipment/Furniture and Requirements	Height (mm)
C.5.1.a Laboratory Chief's Office	15.0	Work surfaces with binder bins, convergent work surfaces, lateral files, tack boards, and white boards.	2 400
C.5.1.b Section Chief's Office	12.0	Work surfaces with binder bins, convergent work surfaces, lateral files, tack boards, and white boards.	2 400
C.5.1.c Principal Investigator's Office	12.0	Work surfaces with binder bins, convergent work surfaces, lateral files, tack boards, and white boards.	2 400
C.5.1.d Senior Permanent (Tenured) Scientist Office	12.0	Work surfaces with binder bins, convergent work surfaces, lateral files, tack boards, and white boards.	2 400
C.5.1.e Postdoctoral Fellow's Workstation	10.0	Work surfaces with binder bins and lateral files.	2 400
C.5.1.f Receptionist or Chief's Secretary's Workstation	8.0	Counter, work surfaces with binder bins and lateral files.	2 400
C.5.1.g Clerical Workstation	8.0	Work surfaces with binder bins and lateral files.	2 400

Space Name	Area per Person* (m^2)	Equipment/Furniture and Requirements	Height (mm)
C.5.1.h Building Engineer's Office	10.0	Work surfaces with binder bins and lateral files.	2 400
C.5.1.j Logistics Office	10.0	Work surfaces with binder bins and lateral files.	2 400
C.5.2 Lockers	0.3 If located in a separate room	Lockers and benches.	2 400
C.5.3 Conference Rooms	0.2	Conference table, chairs, A/V equipment, white boards, etc.	2 400-2 900
C.5.4 Break Rooms	Building population, fixtures, and equipment determine size.	Vending machines, counters, tables with chairs under-the-counter refrigerator, recycle bins, and microwave oven.	2 400
C.5.5 Lactation Rooms	10.0	Lounge chair, table, countertop, undercounter refrigerator, and shelves.	2 400
C.5.6 Shower and Changing Areas	Fixtures and equipment determine size.	Lockers and benches. In addition to the area required for plumbing fixtures, the area for lockers and benches is 0.3 m^2 per person.	2 400

Note: The areas for office space are based on GSA Office Space Guidelines, which are based on the grades in the General Schedule (GS).

*Scientist or other personnel. The area in the schedule is based on two scientists per module.

C.6 Building Operational Areas

Building operational areas include circulation, elevators, shipping and receiving, mechanical, electrical, and telecommunication areas. See General Design Guidelines for requirements.

C.6.1 Circulation: See General Design Guidelines, Section: Architecture.

C.6.2 Elevators: See General Design Guidelines, Section: Transportation.

C.6.3 Loading Docks: Provide space in the area of the loading dock for the collection and storage of medical pathological waste (MPW). A cold box capable of holding a minimum of 30 MPW boxes overnight must be supplied in close proximity to the loading dock. See General Design Guidelines, Sections: Site/Civil and Architecture, for additional loading dock planning and design guidelines.

C.6.4 Housekeeping Closets: Each building must be equipped with appropriately sized housekeeping closets located throughout the facility to adequately serve its needs. A housekeeping closet must be provided with both supply air and exhaust to reduce humidity and control odors. Closets should be fitted with wire bar shelving, mop and broom hangers, a floor sink, and adequate lighting. Closets should be sized to hold cleaning supplies and equipment only. Storage of personal items, chairs, cabinets, and so on creates clutter and promotes pest activity. The interior of the closet must be finished with materials and surfaces that are cleanable, moisture resistant, and durable.

C.6.5 MPW Waste Collection Stations: Space must also be provided for MPW collection stations on each floor of laboratory buildings.

C.6.6 Mechanical, Electrical, and Telecommunication Areas: See General Design Guidelines, individual discipline sections, for requirements.

D. Design Criteria

All NIH laboratories, at a minimum, shall be designed to meet the requirements of biosafety level (BSL-2) containment requirements. The following paragraphs describe the architectural and engineering design guidelines that are important in planning and designing a laboratory building.

D.1 Laboratory Furniture and Equipment

D.1.1 Physical Hazards: Furniture and cabinets/counters shall be designed to be as vertically flush as possible. Kneehole space shall be provided for waste containers. Both these approaches allow for better movement in the laboratory and increase safety.

D.1.2 Casework: Laboratory casework shall be easily cleanable, and finishes shall be compatible with materials used for cleaning and disinfection. Metal casework systems shall be utilized in the NIH's laboratories. Minimum level of quality of casework is outlined in *NIH Laboratory Casework Specifications*, which are available from the NIH Project Officer. Long runs of fixed casework should be minimized. Racked equipment, mobile casework on wheels, or other options that minimize cost and maximize flexibility shall be considered. The casework selected should be interchangeable and readily available so reconfigurations can easily occur. Shelving height is not to exceed 2 200 mm. For additional information on shelving layout and height, see General Design Guidelines, Section: Fire Protection. Fixed casework and countertops shall be sealed to walls and floors during installation to minimize harborage of pests and provide a cleanable joint. Architects/engineers (A/E) shall also review caulking and sealing requirements with the Division of Safety, Integrated Pest Management Section, when designing NIH laboratory facilities.

Countertop materials will vary depending on usage. Traditional materials such as chemical-resistant plastic laminates may be appropriate for some applications. Epoxy resin will apply to most applications where corrosive chemicals are used or where sinks or heavy water usage occurs. Other new materials should be investigated for cost-effectiveness and durability. Stainless steel shall be used for glassware wash areas, cold rooms, and other areas as the program requires.

D.1.3 Chemical Fume Hoods: All containment devices shall be located in the laboratory to avoid entrapment, blocking of egress, or safety hazard to the lab occupant. For correct positioning of the fume hood, the designer shall follow the design methodologies in the NIH publication *Methodology for Optimization of Laboratory Hood Containment* to evaluate containment performance.

D.1.4 Placement of Biological Safety Cabinets (BSCs) in Lab Module: Personnel traffic results in air pattern disruption in BSCs. Therefore, BSCs shall be placed out of the direct traffic pattern of the laboratory. Air supply diffusers or exhaust vents shall not be placed directly over or in front of BSCs where the movement of air can affect the airflow of the cabinet.

D.1.5 Equipment: A wide variety of laboratory equipment is used in NIH laboratories. The NIH's goal is to create adaptability in laboratory space so that instruments can be relocated within the laboratory without altering the space or attendant utility systems and without compromising the operation of the instruments or safety of the users. Some instrumentation rooms, electron microscopy suites, MRI spectroscopy suites, x-ray crystallography suites, and mass spectrometry rooms require special utilities and environmental controls. For requirements, see individual technical discipline sections within the General Design Guidelines volume.

D.1.5.1 Autoclaves: For maximum flexibility, autoclave space shall be provided on each floor where microbiological research is performed. Actual installation of autoclaves and their use are an operational decision. Since quality control considerations may require separate autoclaves for clean and dirty procedures, space shall be considered for both clean autoclaves (for sterilization of microbiological media and clean instruments, etc.) and dirty autoclaves (for decontamination purposes). The A/E shall review the requirements of the building personnel when designing and specifying autoclave space.

Autoclave space shall be finished with epoxy coatings and shall not have a suspended, acoustical ceiling. This area shall be thoroughly caulked and sealed to promote cleanliness and reduce pest harborage.

The space shall have adequate exhaust capacity to remove heat, steam, and odors generated by the use of the autoclave(s). A canopy hood shall be provided over the door of the autoclave. The autoclave space shall operate at negative pressure to the surrounding areas.

D.1.6 Gas Cylinders: Commonly used gases such as CO_2 should be supplied from a centralized manifolded or bulk storage tank and piped throughout the facility. All applicable warning gauges and valves with protective fusible links or the equivalent shall be included in the design. Note: Some gases (flammable gases) may not be stored outside the laboratory. The A/E shall consult with safety personnel regarding placement requirements for specific gases.

If cylinders are to be placed in the lab, they shall be properly secured to a vertical surface or counter out of the way of traffic in the space. Appropriate space for such cylinders shall be provided within the laboratory to minimize potential hazards associated with the use of these cylinders and to maximize usable laboratory space.

D.1.7 Flammable and Waste Storage: Flammable-chemical storage cabinets shall be placed in each laboratory and meet applicable fire safety requirements. Space shall be allocated in each laboratory for waste box storage.

D.2 Architectural Finishes and Materials

Design features and materials selected for the construction of laboratories shall be durable, smooth, and cleanable, provide ease of maintenance and minimize pest access, and contribute to the creation of a comfortable, productive, and safe work environment. Materials for laboratory finishes shall be as resistant as possible to the corrosive chemical activity of disinfectants and other chemicals used in the laboratory. Selection of materials and design of penetrations through walls and floors have an impact on fire safety in buildings. For additional requirements, see General Design Guidelines, Section: Fire Protection.

D.2.1 Floor and Base Materials: Floor materials shall be nonabsorbent, skid-proof, resistant to wear, and resistant to the adverse effects of acids, solvents, and detergents. Materials may be monolithic (sheet flooring) or have a minimal number of joints such as vinyl composition tile (VCT) or rubber tile. Floor materials shall be installed to allow for decontamination with liquid disinfectants and to minimize the potential spread of spills. The base for VCT or rubber tile may be a 100 mm-high readily cleanable vinyl or rubber material. When monolithic flooring is used, either a

100 mm-high integrally coved sheet flooring base or a readily cleanable 100 mm-high vinyl or rubber base may be used.

D.2.2 Walls: Wall surfaces shall be free from cracks, unsealed penetrations, and imperfect junctions with ceiling and floors. Materials shall be capable of withstanding washing with strong detergents and disinfectants and be capable of withstanding the impact of normal traffic.

D.2.3 Ceilings: Ceilings such as washable lay-in acoustical tiles (Mylar face with smooth surface or equivalent) shall be provided for most laboratory spaces. Ceiling heights shall be 2 850 mm in laboratory and laboratory support spaces and a minimum of 2 440 mm in administrative spaces. Gypsum board with epoxy paint ceilings, equipped with access panels, will be provided in glassware washing and autoclave rooms, where the potential for a high moisture level exists. Access panels shall be fitted with gaskets that seal the door when closed and also the flange around the panel lip where it meets the ceiling. Open ceilings are acceptable provided minimal ducting and piping are present and all exposed surfaces are smooth and cleanable. The A/E shall consult with Division of Safety personnel in establishing the final design criteria for ceiling finish in any renovation or new construction project.

D.2.4 Windows and Window Treatment: Windows shall be nonoperable and shall be sealed and caulked. Window systems shall use energy-efficient glass. Treatments shall meet all functional and aesthetic needs and standards. All window treatment selections shall be coordinated with other interior finishes. Light-tight treatments will be provided in conference rooms, laboratories, and other spaces that may need to be darkened. Consistent visual appearance on the exterior of the building shall be maintained by the type of window treatment selected.

D.2.5 Doors: Doors into laboratories along a service corridor shall be 1 200 mm wide with 900 mm active leaf and 300 mm inactive leaf. The door along the personnel corridor shall be a single-leaf 900 mm door. In the event no service corridor is planned, a double-leaf door along the personnel corridor is strongly recommended. Vision panels shall be provided in the active leaf of all laboratory doors. Doors shall be at least 2 100 mm high. In laboratories where the use of larger equipment is anticipated, wider/higher doors shall be considered. Laboratory doors shall be recessed and swing outward in the direction of egress. Door assemblies

shall comply with all appropriate codes. Fiberglass-reinforced polyester (FRP) doors should be considered for areas subject to impact or abuse.

D.2.6 Door Hardware: Laboratory doors are considered high-use doors. All hardware shall be appropriately specified to withstand this type of use. Light commercial grade hardware will not be specified. All appropriate hardware to meet security, accessibility, and life safety requirements shall be provided. Doors should be fitted with kick plates. Laboratory door hardware and keying shall comply with requirements outlined in General Design Guidelines, Section: Architecture.

D.2.7 Wall Protection: Corner guards and bumper rails shall be provided to protect wall surfaces in high traffic/impact areas.

D.3 Structural

D.3.1 Vibration: An analysis of vibration response of the structure shall be made. Consideration shall be given to vibration of floor-framing systems caused by mechanical and electrical equipment such as pumps, chillers, fans, emergency generators, and transformers and other sources such as foot traffic, parking garage traffic, and movement of heavy equipment.

Because vibration can interfere significantly with sensitive laboratory instruments, designers shall take every opportunity to control vibration and to locate vibration sources away from activities sensitive to vibration. An experienced vibration consultant shall make specific vibration recommendations. Steel structures shall not be precluded for use in structural design relative to vibration without analysis.

To control vibration transmitted into laboratory space, the A/E shall consider the following items during the early design phases:

- The structural system shall be relatively stiff so that any vibration that is transmitted occurs at high frequencies.
- Vibrations occurring at higher frequencies are more easily dampened with instrumentation vibration dampening systems and isolation tables than vibrations occurring at lower frequencies.
- The structural system shall have relatively short column spacing.
- Laboratory spaces shall be isolated from sources of vibration.

- Vibration-sensitive equipment shall be located on grade-supported slabs.
- On framed floors, vibration-sensitive equipment shall be located near columns.
- On framed floors, combining corridors and laboratory spans in the same structural bay shall be avoided.

D.3.2 Module/Bay Size: The dimension of the structural bay, both vertical and horizontal, shall be carefully evaluated with respect to the laboratory planning module, mechanical distribution, and future expansion plans. Because of the importance of the laboratory-planning module to functional and safety issues, the laboratory planning module shall be considered as the primary building module in multi-use facilities.

The horizontal dimension of the structural bay shall be a multiple of the laboratory-planning module dimension to provide for maximum flexibility and regular fenestration and to allow uniform points of connection for laboratory services with respect to the laboratory-planning module. Columns shall not fall within the laboratory-planning module to prevent interference with laboratory layouts and inefficient use of valuable laboratory space. Close coordination between structural and mechanical disciplines is critical to minimize interference of piping and ventilating systems with the structural framing.

D.3.3 Floor Slab Depressions: Floor depressions and/or topping slabs will be evaluated for use in special-finish areas or areas exposed to materials that may cause the structural floor slab to deteriorate. Floor depressions shall be reviewed for equipment requirements to allow for ease of movement of equipment.

D.3.4 Equipment Pathway: The potential routing or pathway for the addition or relocation of heavy equipment shall be reviewed and identified during the design phase.

D.4 Heating, Ventilation, and Air Conditioning

HVAC systems shall be responsive to research laboratory demands. Temperature and humidity shall be carefully controlled. Systems shall have adequate ventilation capacity to control fumes, odors, and airborne contaminants, permit safe operation of fume hoods, and cool the significant heat loads that can be generated in the lab.

HVAC systems shall be both reliable and redundant and operate without interruption. Fume hoods will operate continuously. HVAC systems shall be designed to maintain relative pressure differentials between spaces and shall be efficient to operate, both in terms of energy consumption and from a maintenance perspective. Federal energy standards shall be achieved. An energy monitoring control system shall be provided. Studies shall be conducted during the design phase to determine the feasibility of utilizing heat-recovery systems in research laboratory buildings.

Laboratory noise, much of it generated by HVAC systems, shall be maintained at an NC between 40 and 45 dB. Refer to General Design Guidelines, Section: Mechanical, for systems design, preparing a basis of design report, and energy conservation requirements.

D.4.1 Outdoor Design Conditions for the NIH, Bethesda, Maryland: For facilities whose purpose is laboratory research and for HVAC systems requiring 100 percent outside air, outdoor design conditions shall be as follows:

Table D.4.1.a Outdoor Design Conditions for the NIH, Bethesda, Maryland (Facilities With 100 Percent Outside Air)

Season	Temperature (°C)	Wind (km/h)
Summer	35 dry-bulb and 25.7 wet-bulb	12
Winter	-11.6 dry-bulb	10.8

Latitude, 39 N; daily temperature range, -8 °C.

All other facilities such as office buildings, administrative facilities, and noncritical HVAC systems not requiring 100 percent outdoor air will use the values recommended by the current ASHRAE *Handbook of Fundamentals* to conform with the following:

Table D.4.1.b Indoor Design Conditions for the NIH, Bethesda, Maryland (Facilities That Do Not Require 100 Percent Outside Air)

Season	
Summer	1% design dry-bulb 1% design wet-bulb
Winter	99% design dry-bulb

The design wet-bulb temperature for sizing cooling towers shall be 1° higher than the ASHRAE 1 percent outdoor design wet-bulb temperature. All outdoor air-cooled condensing equipment shall be designed and selected on the basis of a 41 °C ambient temperature.

D.4.2 Indoor Design Conditions: The following indoor design conditions shall be used in the design of research laboratories except as explained below. Laboratory areas shall be maintained at the design conditions at all times.

Table D.4.2 Indoor Design Conditions

Season	Temperature (°C)	Humidity (%)
Summer	23 ± 1	50 ± 5 relative humidity
Winter	23 ± 1	40 ± 10 relative humidity

In some special cases, certain NIH laboratories require special temperature and humidity control. The design engineer shall review and check the Program of Requirements for each laboratory room with the NIH Project Officer and the researchers prior to the initial design. Refer to General Design Guidelines.

D.4.3 Air Quality: HVAC systems shall maintain a safe and comfortable working environment and be capable of adapting to new research initiatives. In addition, they shall be easy to maintain, energy efficient, and reliable to minimize lost research time. Laboratory HVAC systems shall utilize 100 percent outdoor air, conditioned by central station air-handling systems to offset exhaust air requirements. Laboratory supply air shall not be recirculated or reused for other ventilation needs. Refer to General Design Guidelines.

Laboratories containing harmful substances shall be designed and field balanced so that air flows into the laboratory from adjacent (clean) spaces, offices, and corridors. This requirement for directional airflow into the laboratory is to contain odors and toxic chemicals, i.e., negative pressurization. Air supplied to the corridor and adjacent clean spaces shall be exhausted through the laboratory to achieve effective negative pressurization. The A/E shall develop in the design phase a formal startup and commissioning plan and procedure that addresses indoor air quality requirements.

Supply air for all laboratory systems shall be filtered on the upstream side of fans with 30 percent efficient pre-filters and 95 percent efficient after-filters. High-efficiency particulate air (HEPA) filters shall be provided in special laboratories where research materials are particularly susceptible to contamination from external sources. HEPA filtration of the supply air is considered necessary in only the most critical applications. BSCs (which are HEPA filtered), rather than HEPA filtration for the entire room, are satisfactory. HEPA filtration shall be provided as required by the Basis of Design report for individual applications.

Exhaust air, in general, does not require filtration or scrubbing. However, in special laboratories using radioisotopes or certain hazardous chemicals and in biocontainment laboratories, exhaust air may require special scrubbing or filtration before entering the combined laboratory exhaust system or discharging to the atmosphere. The A/E shall consult with the NIH Division of Safety, Radiation Safety Branch, for specific requirements.

D.4.4 Air Distribution: Air supplied to a laboratory space shall keep temperature gradients and air turbulence to a minimum, especially near the face of the laboratory fume hoods and BSCs. Air outlets shall not discharge into the face of fume hoods. Large quantities of supply air can best be introduced through perforated plate air outlets or diffusers designed for large air volumes.

D.4.5 Relative Pressurization: Laboratories shall remain at a negative air pressure in relation to the corridors and other non-laboratory spaces. Laboratory air shall flow from low-hazard to high-hazard use areas. In general, laboratories shall be maintained at 47 L/s per module negative per door relative to non-laboratory spaces. Administrative areas in laboratory buildings shall always be positive with respect to corridors and laboratories.

Corridor supply air distribution shall be sized to offset transfer air to laboratories while maintaining an overall positive building pressure. Loading and receiving docks shall be maintained as positive to prevent the entrance of vehicle fumes.

Some laboratories, such as biohazard containment laboratories, genome DNA processing rooms, and tissue culture laboratories require control of relative pressurization. The HVAC system shall be capable of achieving these special relative pressure requirements. Refer to General Design Guidelines.

D.4.6 Air Balance: Control of airflow direction in research laboratories controls the spread of airborne contaminants, protects personnel from toxic and hazardous substances, and protects the integrity of experiments. In these facilities, the once-through principle of airflow is applied on the basis of (1) exhausting 100 percent of the supplied air, (2) maintaining the required airflow with all exhaust units operating at capacity, and (3) providing directional flow of air from areas of least contamination to those of greatest contamination.

For critical air-balance conditions, a personnel entry or exit airlock provides a positive means of air control. An airlock is an anteroom with airtight doors between controlled and uncontrolled spaces. The air pattern in the airlock suits the foregoing laboratory space air-balance requirements.

Supply air quantities are not fully established by the room-cooling requirements and load characteristics. Additional supply air required to make up the differences between room exhaust requirements and primary supply may be designated (1) infiltrated supply, if inducted indirectly from the corridors and other spaces, or (2) secondary supply, if inducted directly to the room.

D.4.7 Ventilation Rates: The ventilation rate for laboratory HVAC systems is driven by three factors: fume hood demand, cooling loads, and removal of fumes and odors from the general laboratory work area. The minimum air-change rate for laboratory space is six air changes per hour regardless of space cooling load. Some laboratories may require significantly higher rates to support fume hood demand or to cool high instrument heat loads in equipment laboratories. The design of the HVAC systems shall allow for the maximum exhaust capacity for all BSCs which may be required in the facility.

D.4.7.1 Ventilation in Laser Laboratories: Rooms where laser equipment is used shall be properly ventilated to avoid buildup of ozone generated from the laser and mercury lamps.

D.4.8 Heating and Cooling Load Calculations: Complete design load calculations and a moisture control study shall be prepared for each space within a design program and presented in a format similar to that outlined in the latest ASHRAE *Handbook of Fundamentals.* Heating and cooling load calculations are required for all projects to facilitate review and provide a reference for system modifications. Individual room calculations shall be generated and summarized on a system basis and presented with a block load to define the peak system load. Load summary sheets shall indicate individual rooms with area, design air quantity, L/s per m^2, air changes per hour, and corresponding return or exhaust air quantity. Calculations shall include but not be limited to indoor and outdoor design parameters, heat gains and heat losses, supply and exhaust requirements for central systems and for each area of the facility, humidification and dehumidification requirements, and heat recovery. As a reference, calculations for assessing heating and cooling loads may include but are not limited to the following:

Sensible Heat Loads	Latent Heat Loads
Walls, external, external chases	People
Roofs and skylights	Animals
Floors, when above unconditioned spaces	Internal equipment
Ceilings, when below unconditioned spaces	Infiltration
Partitions, when next to unconditioned spaces	Makeup and ventilation air requirements
People, sensible	Auxiliary air requirements
Animals, sensible	
Lights (room and task)	
Internal equipment and personal computers	
Supply, return, and exhaust fan heat	
Infiltration	
Makeup and ventilation air requirements	
Auxiliary air requirement	

All heating and cooling load calculations shall include a predetermined safety factor to compensate for load inaccuracies, future flexibility, infiltration, and air leakage. Safety factors shall be clearly defined in the Basis of Design report.

D.4.9 Lighting Loads: The HVAC system shall provide, at a minimum, the following heat loads generated by room and task lighting:

Table D.4.9 Lighting Loads

Space	Task Lighting (W/person)	Room Lighting (W/nm^2)
Laboratories	250	32
Offices	250	32
Corridors	NA	11

D.4.10 Occupancy Loads: In the absence of more specific program requirements, the following occupancy loads shall be used as a general guide for HVAC calculations during the facility design. The A/E shall review the actual occupancy load and these general loads with the NIH Project Officer prior to starting the HVAC design work.

Table D.4.10 Occupancy Loads

Space	Floor Area
Offices	7 nm^2 per full-time employee (FTE)
Laboratories	10 nm^2 per FTE
Laboratory support areas, constant-temperature rooms, autoclave rooms, and glassware-washing rooms	22 nm^2 per FTE

D.4.11 Ventilation Loads:

Table D.4.11 Ventilation Loads:

Space	Ventilation Air
Laboratory/laboratory support	6 air changes per hour minimum
Office/administrator support	9 L/s per person minimum

D.4.12 Laboratory Equipment Cooling Loads: The central HVAC system shall provide as a minimum cooling for 1 892 W of laboratory equipment per lab module or cooling for the actual calculated load, whichever is greater. NIH experience has shown that for a typical 22 nm^2 laboratory module, the equipment load is usually 1 892 W (sensible heat) or 86 W/nm^2. The A/E shall make a detailed and complete inventory of all laboratory equipment scheduled for installation in each design space and, using estimated utilization factors, determine the projected equipment load requirement. Equipment utilization factors shall be indicated in the Basis of Design report.

The A/E shall carefully evaluate the following rooms used for laboratory support, which often have higher than normal cooling loads, as well as evaluate the use of supplemental units to remove excessive sensible loads affecting these areas while maintaining minimum ventilation requirements:

- Common equipment rooms
- Autoclave rooms
- Glassware washing rooms
- Darkrooms
- Special function rooms

D.5 Plumbing

The plumbing systems shall be coordinated with the laboratory-planning module. A piping distribution method, including mains, risers, and branch lines, shall be designed to accommodate easy service isolation and system maintenance while minimizing disruption to laboratory functions. Piping systems shall be designed for flexibility and have redundant components to provide reliable and continuous operation. Adequate fluid temperature, pressure, and volume shall be delivered to required laboratory functions through conservatively sized pipe mains. Future capacity allowances need to be considered in building designs. Emergency isolation valves shall be conveniently located on branch lines so that segments can be taken offline quickly in the advent of failures.

Building services needed by researchers (such as centralized bottled gases, compressed air) shall be considered in the design for modular systems and services

for the facility. Manifolding gases and decentralizing some services can be evaluated. Refer to General Design Guidelines, Section: Plumbing.

Piping systems shall be designed for flexibility and have redundant components to provide reliable and continuous operation. Adequate fluid temperature, pressure, and volume shall be delivered to required laboratory functions through conservatively sized pipe mains. Future capacity allowances need to be considered in building designs.

Floor penetrations in laboratory areas shall be avoided. All required penetrations shall use raised sleeved openings that are sealed and caulked to prevent leakage and maintain the fire rating of the slab.

D.5.1 Emergency Shower/Eyewash Equipment: One emergency shower shall be available to each laboratory space containing a chemical fume hood. This shower shall be tapped to the laboratory water supply. Eyewash stations shall be available to each laboratory space. Eyewashes shall be no more than 22 m from any point in a laboratory. Eyewashes shall be tapped to the laboratory water source. See General Design Guidelines, Section: Plumbing, for additional information.

D.5.2 Vacuum Systems: Vacuum pump systems will have hydrophobic (water-resistant) filters on the suction side, with the exhaust to the outside of the facility. Vacuum system exhaust shall be vented to the outside of the building and not recirculated to the mechanical room. A sampling port may be needed to sample exhaust. Filter housing shall be designed for easy replacement of the filter, with maximum protection for maintenance employees from possible contamination.

Vacuum systems shall be protected with appropriate filtration (0.2 micron hydrophobic filter or equivalent) to minimize the potential contamination of vacuum pumps. Filters shall be located as close as possible to the laboratory in order to minimize potential contamination of vacuum lines. Some mechanism for the decontamination of filters shall be incorporated in the design of the vacuum system. The design of the vacuum system shall be reviewed by Division of Safety personnel prior to finalization.

D.6 Electrical

D.6.1 Normal Power: The following load figures in W/m^2 shall be used in calculating and sizing the overall building load. These figures are connected load and shall be used in the early design stages. Actual design loads shall be used in the later part of the design. The range provided allows for varying intensity of usage. The mechanical loads do not include chilled water or steam generation, which are produced centrally on the NIH campus. The engineer shall use sound judgment in applying these numbers.

Table D.6.1 Normal Power Load Figures

Load	W/m^2
Lighting	27-38
Receptacle	48-215
HVAC	97-108
Lab equipment	43-86
Elevators	11-16
Miscellaneous	11-22
Total Range	**237-485**

Laboratories shall have a surface metal raceway mounted above all benches and as otherwise required in the room. The power duct shall have a continuous 60 A, 120/208 V, 3 Φ, 4 wire plus ground circuit installed. Twenty ampere taps as needed shall serve receptacles via 20 A single pole circuit breakers mounted in the raceway. Receptacles connected to this circuit shall be ivory in color. Receptacles shall be mounted 600 mm on center in a continuous raceway above laboratory benches. Receptacles mounted within 1 m of water dispensing shall be the ground fault interrupter (GFI) type. One 60 A, 3 Φ, 4 wire circuit minimum shall serve a laboratory module.

Each lab module shall have two 20 A circuits for computers with a maximum of three duplex receptacles each. These computer receptacles shall be gray in color. Each lab module shall have one 20 A circuit for printers with a maximum of two duplex receptacles. The printer receptacles shall be blue in color.

D.6.2 Emergency Power: The following load figures in W/m^2 shall be used in sizing the generator. These figures are connected load and shall be used in the early design stages. Actual design loads shall be used in the later part of the design. The range allows for varying intensity of usage. The engineer shall use sound judgment in applying these numbers.

Table D.6.2 Emergency Power Load Figures

Load	W/m^2
Lighting	1-5
Receptacle	1-2
HVAC	1-32
Lab equipment	20-43
Elevators*	2-2
Total Range	**25-84**

*Minimum: One elevator per bank of elevators

The following loads are required to be connected to emergency power. These loads are in addition to any code-required emergency loads:

- A 20 A, 120 V circuit in a junction box mounted to the structural ceiling of each lab module
- One light fixture per module with one light switch per lab
- BSCs
- Supply and exhaust fans for BSL-3 and BSL-4 labs
- Lab equipment alarm-monitoring system
- Fume hood exhaust fans
- High-value specimen refrigerators, freezers, cold rooms, warm rooms, etc.
- Incubators

D.6.3 Lighting: Laboratory research requires high-quality lighting for close work, in terms of both brightness and uniformity. Fixtures shall be positioned to provide uniform, shadow-free and glare-free illumination of the laboratory benchtop.

General lighting for laboratories shall be fluorescent fixtures. Incandescent lamps may be required for special purposes. Fluorescent light fixtures should be directly above and parallel to the front edge of the laboratory bench to prevent shadows. Local wall switches shall control light fixtures. Fluorescent lighting shall be circuited to 277/480V panels located in electric closets. Electrical loads for laboratory lighting should be approximately 2.5 W/m^2. Fluorescent light fixtures should be equipped with RF suppression type ballasts in instrument laboratories, where RF may interfere with instrument operation or be cold cathode-type of ballast located remotely.

D.6.4 Alarm and Monitoring Systems: The increasing sophistication and fine control of laboratory instruments and the unique quality of many experiments demand closely monitored and alarmed systems that can be connected to individual pieces of equipment or temperature-controlled rooms. Several excellent monitoring systems are available for this purpose. They can be connected to a central monitoring facility at several levels of observation or can be used internally within a laboratory setting. Wherever possible, all freezers (ultra-low and liquid nitrogen), refrigerators, refrigerated instruments such as centrifuges, environmental rooms, or any other piece of equipment with a variable temperature critical to sample preservation should be connected to the system. If the system is limited by capacity, then the user shall prioritize the units connected to the system.

If equipment in renovation work requires monitoring, the user or the designer shall receive approval from the Office of Research Facilities (ORF). If approval is granted, wiring and conduit shall be installed in accordance with ORF requirements.

D.6.5 Conduit: New buildings or major renovation of existing buildings shall have empty conduit with pull lines installed for monitoring lab equipment. A distribution system of raceways shall start at the building engineer's office or another central location. The raceway shall connect with each lab module's service corridor and other locations likely to have lab equipment requiring monitoring.

D.6.6 High-Voltage Equipment: Refer to the electrical design considerations for shunt trip breakers for labs with high-voltage electrical equipment in General Design Guidelines, Section: Electrical.

D.7 General Health and Safety

The NIH, through the Division of Safety, has developed a comprehensive occupational safety and health program to protect the safety and health of all employees. This includes the occupational work setting found in laboratories, clinical settings, animal-handling activities, and mechanical support services. Safety and health regulations and guidelines require the use of engineering controls for worker protection, wherever possible, to minimize the potential for occupational exposure to hazards in the workplace. To be most effective, engineering controls for protecting occupational safety and health shall be designed into facilities for both new construction and renovated space. This proactive approach can minimize numerous common health and safety concerns in laboratory facilities. Facilities shall be designed for ease of maintenance. This is particularly important with regard to the specific containment devices (e.g., HEPA filter housings, HVAC systems, vacuum systems, autoclaves, etc.) designed for the facility.

These health and safety guidelines are to be incorporated, as appropriate, in facility-specific construction documents by the A/E to ensure that health and safety protection is engineered into the design of any new or renovated facility and at the time of construction of the facilities.

While many of the requirements for health and safety engineering are incorporated in these guidelines, it is impossible to cover all possible concerns. The architectural/ engineering firm shall, whenever possible, have a health and safety specialist on staff and shall always consult with Division of Safety personnel with regard to specific health and safety engineering requirements in the design of new construction and renovation projects.

D.8 Biological Safety

Additional biological safety regulations, codes, and standards that are required references for this section of the NIH Design Policy and Guidelines are located in the Appendix.

Work performed at the NIH involves the potential for occupational exposure to biohazardous materials. Biohazardous materials are defined as infectious agents, or materials produced by living organisms that may cause disease in other living

organisms. While, generally speaking, the laboratory procedures identified as good microbiological techniques are helpful in minimizing potential occupational exposure to biohazardous materials, containment of these agents through the use of good facility design is also extremely important. The intent of this section is to provide A/Es with a working knowledge of the facility design parameters required for the construction of facilities, which shall provide for containment of biological hazards.

D.8.1 Background: The CDC/NIH guideline *Biological Safety in Microbiological and Biomedical Laboratories* provides guidance in the appropriate containment of biohazardous work. Biological safety levels 1-4 have been designated, with BLS-1 being the least hazardous. The biological safety levels are based on the probability of occupationally acquired infections resulting from the handling of specific agents in the laboratory. Containment facility design and laboratory practices have been developed for each biological safety level to minimize the potential for personnel exposure and release to the environment. All NIH laboratories at a minimum shall be designed to meet the requirements of biosafety level 2 (BSL-2) containment requirements.

D.8.2 Biological Safety Level 3: BSL-2 laboratory space is normally not easily convertible to BSL-3 containment space because of specific requirements for limiting access, airlocks, HVAC filter decontamination processes, autoclave space, and so on. Design considerations shall be given to designating a given amount of space in each facility as BSL-3 laboratory space or potential BSL-3 space. This space could be used as BSL-2 and easily upgraded or converted to BSL-3 as necessary. The space so designated shall be constructed using appropriate BSL-3 criteria.

D.8.2.1 Containment Requirements: BSL-3 laboratories require all of the design considerations for BSL-2 laboratories plus specific requirements for the additional containment of those biohazardous materials used in the laboratory. No compromise of the integrity of the containment of the BSL-3 laboratory is allowed.

D.8.2.1.1 Restricted Access: BSL-3 laboratories shall be separated from areas with unrestricted traffic flow by passage through two sets of self-closing doors. A ventilated airlock shall be designed to separate the common corridor(s) from the BSL-3 containment laboratory. The purpose of a BSL-3 laboratory facility is to ensure containment of agents used in this laboratory. It is recommended that airlock doors be interlocked to prevent simultaneous opening of doors between the outside corridor and containment areas. Interlocks, when present, shall be provided with a

manual override for use in case of emergency. Final determination on the design of airlocks for these facilities shall be made in consultation with Division of Safety personnel.

D.8.2.2 Sinks: A sink for hand-washing is to be located near the exit door in each BSL-3 laboratory (not in the airlock). Sink faucets shall be foot, elbow, or automatically operated.

D.8.2.3 Interior Surfaces: Interior surfaces of walls, floors, and ceilings shall be water resistant (e.g., epoxy paint, caulking, etc.), gas tight (i.e., capable of containing decontamination gas during decontamination process), and easily cleanable.

D.8.2.4 Ceilings: All BSL-3 facilities shall have a ceiling with a smooth, sealed finish. In new construction, all access to critical mechanical equipment (ventilation ducts, fans, piping, etc.) shall be provided outside the containment facility. See the HVAC System/Mechanical Equipment paragraph later in this section.

D.8.2.5 HVAC/Airflow: Ventilation shall be single-pass air, and all BSL-3 space shall be kept negative with respect to outside corridors and laboratories. Exhaust ducts shall be under negative pressure until the air is discharged outside the building, or until passed through HEPA filtration.

HEPA filtration of BSL-3 space may, in some cases, be required (see the HEPA Filtration of BSL-3 Laboratory Exhaust paragraph).

If the BSC cabinet exhaust system is connected to the building exhaust, it shall be connected in such a manner as to maintain the air balance of the cabinets and the building exhaust system. See the Biological Safety Cabinets paragraph later in this section.

Continuous-flow centrifuges and other aerosol-producing equipment shall be contained in devices that exhaust air through HEPA filters prior to discharge into the laboratory. Where possible, such containment devices shall be discharged to the outside through the cabinet exhaust system.

D.8.2.6 HVAC System/Mechanical Equipment: When retrofitting existing laboratory space as BSL-3 containment, it may not be possible to keep access to critical mechanical equipment outside the laboratory space. In these cases, an access

panel shall be supplied inside the laboratory. The access panel shall be hinged (piano-type hinge) and gasketed with gas-tight gaskets to ensure an appropriate seal for both containment and decontamination procedures.

D.8.2.7 Utility Distribution: All utilities (e.g., water, vacuum, gas, electrical conduit, etc.) shall be installed to minimize exposed surfaces and facilitate ease of cleaning.

D.8.2.8 Penetrations and Joints: All penetrations in walls, floors, and ceilings shall be sealed with a smooth finish to facilitate decontamination and cleaning. All joints between fixed cabinetry and equipment (e.g., shelves, cabinets, plumbing fixtures, etc.) and the floor or wall shall be smooth coved and sealed to ensure maximum cleanability. Supply and exhaust ducts shall be gasketed or sealed at the point of penetration into the laboratory to ensure containment and the capability of gas decontamination. Light fixtures in BSL-3 laboratories shall be surface or pendent mounted.

D.8.2.9 Laboratory Furniture: Laboratory furniture shall be designed and installed to facilitate cleaning around and under the furniture. Movable furniture with minimal wall and floor connections shall be considered for installation in BSL-3 laboratories. Such cabinetry lends itself to ease of cleaning and decontamination of the entire laboratory space.

D.8.2.10 Windows: BSL-3 laboratories should be designed without windows. However, laboratory windows, where present, shall be designed not to open. All interior windowsills shall be sloped, and the seams around the windows shall be sealed.

D.8.2.11 Autoclaves: Decontamination equipment (preferably autoclave) shall be available in the BSL-3 laboratory. Autoclave space shall meet the guidelines as provided in the Space Descriptions section of this volume.

D.8.2.12 Vacuum Systems: Vacuum systems in BSL-3 laboratories shall be protected by filtration. See General Design Guidelines, Section: Plumbing.

D.8.2.13 Alarms: BSL-3 facilities shall be designed to ensure notification of inappropriate directional airflow. Both visual (gauges) and audible local alarms are required. In addition, alarms indicating the potential failure of BSL-3 containment shall be tied to a central system at the building engineer's office, where possible. Notification devices shall indicate the failure to maintain a negative pressure

differential from a non-contaminated area to potentially contaminated areas. All designs shall meet CDC/NIH guidelines. All alarm systems shall be validated prior to occupancy of the containment space.

D.8.2.14 HEPA Filtration of BSL-3 Laboratory Exhaust: While HEPA filtration of room exhaust from BSL-3 laboratories is seldom necessary, an evaluation of the need for specific filtration shall be performed during the initial planning and design stages of the project. The need for HEPA filtration shall be determined on a case-by-case basis in consultation with NIH Division of Safety personnel and shall be based on a hazard assessment of the materials in use and the procedures to be performed.

D.8.2.15 Autoclave Exhaust Filtration: The exhaust from an autoclave contains a significant amount of moisture. Filtration of this exhaust, when necessary (as determined above in HEPA Filtration of BSL-3 Laboratory Exhaust), shall be through a moisture-resistant (hydrophobic) filter such as a Pall 0.2 micron filter or equivalent. Filtration of moist exhaust through a cold filter housing containing a paper HEPA filter will result in destruction of the HEPA filter and a break in integrity.

D.8.2.16 HEPA Filter Housings: When installed, HEPA filter exhaust housings shall be constructed to allow for appropriate particulate testing (i.e., DOP or equivalent) and shall be capable of being isolated from the ventilation system for gas decontamination and testing (i.e., gas-tight dampers and housings).

NIH Division of Safety personnel shall be consulted with regard to the suitability of the decontamination mechanism designs and approve the system prior to the finalization of the design.

D.8.3 Biological Safety Level 4: BSL-4 is required for work with exotic agents that pose a high individual risk of aerosol-transmitted laboratory infection and life-threatening disease. Construction of BSL-4 laboratory facilities requires careful planning and unique design features. This type of containment laboratory shall be designed and constructed to specific containment requirements in order to minimize the potential for personnel exposure and to prevent dissemination of BSL-4 organisms to the environment. Specific requirements for the design and construction of BSL-4 containment labs shall be provided by the NIH Division of Safety, and no design or construction of such labs may proceed until the Division of Safety has been contacted and approval given.

D.8.4 Biological Safety Cabinets: BSCs are safety devices used for primary containment of biohazardous materials. These units are uniquely different from other types of laboratory hoods, and installation involves specific design consideration. BSCs are classified as Class I, II, or III, although Class I cabinets are no longer being manufactured on a regular basis. The design of the HVAC systems shall allow for the maximum exhaust capacity for all BSCs, which may be required in the facility.

Where BSCs are needed, Class II cabinets are being installed in new and renovated laboratories. Class II cabinets include both Type A and Type B cabinets. The Type A cabinet recirculates 70 percent of the air in the cabinet and exhausts 30 percent to the room. Type B cabinets are further classified as Type B1 (exhausts 70 percent of the air of the cabinet directly out through the building exhaust system), B2 (exhausts 100 percent of the air of the cabinet), and B3 (essentially a modified Type A that exhausts 30 percent of the air of the cabinet). Each type of cabinet has unique properties and specific uses.

Class III BSCs are totally enclosed glove boxes primarily used in BSL-4 laboratories, but they may also be used for work with hazardous chemicals. Note that Class III BSCs are negative-pressure cabinets not to be confused with positive-pressure glove boxes, which may, if they leak, release hazardous materials to the laboratory.

Modern BSCs are designed to minimize personnel, product (research), and environmental exposure to biohazardous agents and other particulate matter. In addition to specific requirements for placing and installing BSCs, absolute attention to procedural details by the user is necessary to ensure that these cabinets perform in the manner intended. BSCs are certified according to NSF Standard 49, which establishes the stringent cabinet performance requirements for both personnel and product protection.

D.8.4.1 Class II, Type A, Cabinets: Type A cabinets are suitable for routine microbiological research in the absence of volatile chemicals. These cabinets vent to the room in which they are housed. Although the exhaust is HEPA filtered, there is some small possibility of release of agents to the room if the filter is damaged. Volatile chemicals shall not be used in these cabinets since the recirculation of the air would result in concentration of the volatile chemical in the cabinet with potentially hazardous consequences. In addition, when these cabinets are vented to the laboratory, volatile chemicals would be released to the room with the potential for significant exposure to personnel in the laboratory and elsewhere in the building.

It shall be noted that Type A cabinets have a contaminated positive pressure plenum. A pressure test of this plenum to ensure that no leakage is occurring shall be performed on all new or relocated cabinets. Such tests shall also be performed following maintenance involving the removal of panels used to form the positive pressure plenum. At the NIH, Class II, Type A or Type B3, cabinets may not be exhausted to the outside through the building ventilation system.

If recirculation of exhaust to the laboratory space from an installed cabinet is not acceptable, a Class II, Type B1 cabinet, hard-duct exhausted to the outside, shall be considered. The final decision on the appropriate cabinet shall be made by personnel from the NIH Division of Safety.

D.8.4.2 Class II, Type B1, Cabinets: Type B1 cabinets are also used for routine microbiological research and for tissue cultures. Although these cabinets are recirculating (70 percent exhaust and 30 percent recirculating), it has been shown that small volumes of volatile chemicals may be used in them provided the work is performed past the middle of the work surface, toward the back of the cabinet. The exhaust from the work surface in Type B1 cabinets is to the back of the cabinet, and this exhaust is not recirculated in the cabinet. The HEPA-filtered exhaust from these cabinets is hard ducted through the facility ventilation system. All contaminated areas of these cabinets are under negative pressure. Potentially contaminated air from the work surface that is exhausted through the front vent of the cabinet is HEPA filtered below the work surface and then recirculated to the work surface.

Type B1 cabinets are the most versatile of all the BSCs, and their installation results in more flexible laboratory space. However, since these cabinets require that they be hard ducted to the building exhaust system and such ducting is not always possible in retrofit projects, Class II, Type A or B3, cabinets may be substituted when appropriate. The final decision on the type of cabinet to be used shall be made by the NIH Division of Safety.

D.8.4.3 Class II, Type B2, Cabinets: Type B2 (total exhaust) cabinets are useful when working with both biological and hazardous chemical materials, including volatile chemicals and carcinogens. The exhaust of these cabinets is HEPA-filtered, and additional filters may be added for special purposes (e.g., charcoal filters for radioactivity or volatile organics). Filters other than the HEPA filters shall be located downstream of the HEPA filter whenever possible since infectious agents could be

present in the exhaust airstream and would be deposited in the HEPA filter without contaminating the extra filter.

Installation of Class II, Type B2, cabinets requires special ventilation engineering considerations. Type B2 cabinets are total exhaust cabinets that exhaust over 378 L/s of air. This air shall be supplied from either the room or the outside of the facility. At least 142 L/s shall be supplied from the room to satisfy the inflow air velocity across the front grill of the cabinet and to ensure containment of materials in the cabinet. It is important to evaluate the ventilation of the laboratory to ensure that sufficient air is supplied to the room to prevent robbing adjacent areas of air. Failure to adequately supply such cabinets could result in the failure of other containment devices (e.g., fume hoods, BSCs, etc.) in adjacent laboratories.

D.8.4.4 Class II, Type B3, Cabinets: Type B3 cabinets function in a manner similar to Type A cabinets but have been redesigned to provide a negative-pressure zone around all positive-pressure contaminated plenums. They have the same limitations as the Type A cabinets.

D.8.4.5 Requirements for BSC Installation: All BSCs to be installed at the NIH shall meet NSF Standard 49 requirements and be approved for purchase by NIH Division of Safety personnel. Selection of cabinets is to be based on an evaluation of the work to be performed and the specific safety requirements necessary to protect personnel, research, and the environment.

Air supply diffusers, or exhaust vents, shall not be placed directly over or in front of BSCs, where the movement of air can affect the airflow of the cabinet. The safe operation of BSCs depends on the air curtain formed by incoming and downflow air in the cabinet. Disruption of the air curtain will result in potential compromise of the operation of the cabinet and possible contamination of personnel or work. Personnel traffic results in air pattern disruption in BSCs. Therefore, these cabinets shall be placed toward the rear of the laboratory module, out of the direct traffic pattern of the laboratory. A gas-tight roll-valve (Baker Company, Sanford, Maine; Martin/ Peterson, Kenosha, Wisconsin; or the equivalent) shall be provided on the Class II, Type B1, cabinet exhaust. This valve is required in order to facilitate decontamination and testing of the cabinets.

D.8.4.6 Natural Gas and Use of BSCs: Modern microbiological techniques, equipment, and materials have made the need for natural gas service to a BSC a

thing of the past. Proper use of the BSC and sterile disposable supplies obviates the need for flame sterilization in most experimental procedures. There is no longer a need for natural gas to be supplied to the BSCs. In the event that the research protocol dictates a need for natural gas, a Type B (ducted) BSC should be used. In areas that are already served by Type A (non-ducted) BSCs piped to receive natural gas, there is no need to replace them with a Type B BSC. A manual gas shutoff valve should be installed on the exterior of the cabinet, and gas shall be turned off when not in use. All future requests for natural gas supply to Type A BSCs will be considered on a case-by-case basis.

D.9 Radiation Safety

Additional radiation safety regulations, codes, and standards that are required references for this section of the NIH Design Policy and Guidelines are located in the Appendix.

Work performed at NIH laboratories involves the potential for occupational exposure to radioactive materials and other sources of ionizing and non-ionizing radiation. While laboratory procedures identify good radiation safety practices and techniques essential to minimize potential exposure to radiation, the security, containment, and shielding of this material and equipment through the use of good facility design are other extremely important elements.

The intent of this section is to provide A/Es with a working knowledge of the facility design parameters required for the construction of facilities, which shall provide for the control and containment of these radiation hazards.

Not all sources of ionizing radiation are covered by NRC licensing. The nonlicensed sources are, however, controlled by regulations issued by the NIH Radiation Safety Committee upon recommendation by the radiation safety officer. Nonlicensed sources include x-ray machines, high-voltage accelerators, electron microscopes, and radioactive materials from sources other than reactor by-products.

In addition to the protection of occupationally exposed workers, the NIH Division of Safety, Radiation Safety Branch, must ensure that the general public and surrounding environs are also provided with an adequate and similar degree of protection.

D.9.1 Background: The *NIH Radiation Safety Guide* provides guidance and technical information concerning the use of radioactive materials as well as policies and procedures for radiation-producing machines and areas. Radiation safety control, containment, and shielding design and laboratory practices have been developed to minimize the potential for radiation exposure to workers as well as release to the environment.

D.9.2 Specific Areas of Concern: The following key radiation issues have been identified relative to laboratory activities:

- Radiation safety requirements for laboratories using radionuclides
- Radioactive airborne and liquid effluent sampling
- Radiation safety requirements for devices used in medical research, such as x-ray machines, accelerators, and irradiators
- Radiation safety requirements for non-ionizing radiation (only including MRI and high-intensity lasers (e.g., CO_2)
- Security of radioactive materials

All radioactive materials stored at any NIH facility shall be secured. Unattended laboratories in which radionuclides are in use or stored shall be locked, or radioactive materials shall be locked in containers, refrigerators, or freezers. In addition, besides locked doors, other security options such as card key access, should be considered.

D.9.3 Radioactive Waste Storage:

D.9.3.1 On-Campus Buildings: Laboratory buildings on the NIH campus shall be designed with a separate area for the temporary staging of hazardous and radioactive waste. Mixed waste (hazardous waste that is also radioactive) shall be treated as radioactive waste in this temporary staging area. These staging areas are discussed in detail in General Design Guidelines, Section: Environmental. Only the specific issues that are directly related to radioactive waste are discussed here. Information on the carts and equipment for the transfer of radioactive waste currently in use can be obtained from the NIH Division of Safety, Radiation Safety Branch.

The staging area shall be large enough to provide for temporary storage of the radioactive waste and capacity for storage of specialized carts used to transport the radioactive waste from the laboratories. The staging area shall be designed to

contain any spills of radioactive waste that may occur during handling of the waste materials. It is anticipated that this will be accomplished using specialized carts; however, the designer may propose alternate means for spill containment. Special consideration shall be given to this area in the fire protection design as indicated in NRC Information Notice 90-09, which specifies the description of the fire protection and suppression system to minimize the likelihood and extent of fire.

Coolers and/or walk-in freezers used to store MPW will also be used to store animal carcasses, tissues, and bedding contaminated with radioactive materials. Coolers and/or walk-in freezers shall be located in each building with laboratories conducting biomedical research with radioactive materials.

D.9.3.2 Off-Campus Facilities: Laboratory facilities not located on the NIH campus shall be designed with a room for use in processing and staging hazardous and radioactive waste. Mixed waste shall be treated as radioactive waste in this room. Only specific issues directly related to radioactive waste are discussed here. A 2 hour-rated wall shall be designed to separate radioactive waste and hazardous waste storage areas.

The waste will be transported to the NIH campus for additional processing and shipping to the long-term radioactive waste storage facility. Since this waste will be transported over public roads, this room shall be used to prepare the radioactive waste for shipment. Processing conducted in this room shall include bulking of waste into large containers, lab packing of individual waste containers, and labeling and manifesting the containers for shipment. There will be a need for a bulking hood to perform these activities.

Consideration shall also be given to providing a service elevator on the premises that can be used to transport the radioactive waste to the appropriate marshalling area in the building. If a service elevator is not available, the use of a passenger elevator may be appropriate; however, dedicated times will be required to transport the radioactive waste.

The staging room shall be divided into two separate areas. The first area shall be large enough to provide for temporary storage of the radioactive waste as it is received from the laboratories and after it is packed for shipment. The second area shall be used for bulking and packaging the waste. Sufficient space shall also be provided for storing specialized carts used to transport the radioactive waste from

the laboratory. The staging room shall be designed to contain any spills of radioactive waste that may occur during handling of the waste materials. Spill containment in the bulking and packaging area may be accomplished with a curb around the area, secondary containment bins, or a combination thereof. Spill containment in the staging area may be accomplished with a curb around the area, secondary containment bins, shelving designed to contain spills, or a combination thereof. These areas shall be thoroughly caulked and sealed to minimize pest harborage and exclude pests.

It is important to note that prior to contracting for leased space that will require remodeling, renovation, or other extensive architectural or engineering work, the NIH Division of Safety shall be informed and provide the necessary technical assistance.

D.9.3.3 Laboratory Module Requirements: All laboratory modules shall be designed for the safe storage of radioactive waste. The volume of radioactive waste generated by a laboratory is a function of the type of work being performed there. The designer will need to consider the function of the laboratory to determine the space necessary for radioactive waste storage. The designer shall also recognize that some types of radioactive waste will require segregation from other types and design the radioactive waste storage area to accommodate multiple containers.

All laboratories shall be designed to fit the appropriate low-level radioactive waste (LLRW) storage receptacles and/or containers. Contact the Radiation Safety Branch for specifications on these containers. Five LLRW streams have been identified from the NIH Waste Disposal Calendar, current edition:

- Liquids
  - aqueous waste
  - solvents/other hazardous chemical constituents (mixed waste)
- Dry or solid waste (dry active waste)
  - disposable labware
  - sharps (can also be categorized as MPW)
- Liquid scintillation vials and/or bulk liquid scintillation media
- Animal carcasses and/or tissues
- Animal bedding and/or solid excreta

The size of the space dedicated to each of the containers shall be based on the volume of radioactive materials generated and/or research activities performed in the laboratory. Standard-sized containers are available from both the Radiation Safety Branch and the radioactive waste contractor. Container placement locations shall be considered in the design. The location of the radioactive waste storage in laboratories shall be standardized to assist emergency response personnel. It is recommended that this storage be located near the laboratory door for convenient access by the technician collecting the radioactive waste. For laboratory modules with a service corridor, it is recommended that this storage be located near the service entrance rather than the hall entrance. This will avoid the need for moving radioactive waste through the main corridors of the laboratory building. The configuration of the radioactive waste storage area in the laboratory shall be designed to facilitate radioactive material spill cleanup and decontamination. Interior surfaces of the storage area shall be readily cleanable for ease in decontamination.

The designer shall also include the following considerations in the design:

- All laboratories shall have the ability to be locked against unauthorized access.
- All radioactive materials in laboratories shall be secured when unattended.
- Space required for shielding waste containers shall be considered.
- Laboratories and marshalling areas shall be sized appropriately to reduce accumulation.
- Appropriate spill containment shall be included in all storage areas.
- Potential shielding requirements shall be considered between adjoining or adjacent lab bench areas for high-energy beta emitter radionuclides.
- If the laboratory is to be used for high-energy gamma emitter radionuclides, then the design of the countertops and hoods shall take into account and compensate for the additional weight required for the appropriate lead shielding.
- Secure equipment alcoves shall be considered for storage of radioactive materials and/or irradiator equipment.
- If there is a need to store radioactive materials in refrigerators and/or freezers, the design specifications shall include security provisions, e.g., locks as part of the integrated system, to secure this equipment.
- Corridors and public space shall not be designated and used for storage, and equipment such as refrigerators and freezers shall not be designated to store this material in these areas.

D.9.4 Module Requirements: Beta barriers for shielding energetic beta emitters (P-32), often transparent plastic (Lucite) sheets, 0.95 to 1.27 cm thick, shall be considered to protect personnel working in adjacent and close work areas.

D.9.5 Ventilation Systems: Ventilation systems used for controlling airborne radioactive discharges require design considerations. Laboratory exhausts shall be manifolded into the regular building exhaust. Hoods used for bulking radioactive materials shall have the capability for sampling. In addition, the design shall accommodate space in the mechanical room to provide for any future additional filtration capability.

If the facility requires additional hoods, specifically for the use of iodination techniques, then the exhaust from these installations shall be equipped with the capability for HEPA or charcoal filtration. A distinct installation shall be considered separate from the main exhaust system.

D.9.6 Radioactive Airborne and Liquid Effluent Discharges: The NIH Division of Safety, Radiation Safety Branch, prohibits discharge of radioactive material into laboratory sinks. Provision shall be made in the design for installation of appropriate sampling probes for sampling capability to assess airborne and liquid effluent discharge streams, including main exhaust systems, sufficient to demonstrate compliance with the requirements of 10 CFR 20.1302. Liquid effluent monitoring can be accomplished by batch, composite, or continuous sampling prior to discharge into the sanitary sewer system.

Design and construction considerations for airborne radioactive effluent monitoring shall also include the following:

- All systems for use with radioactive materials shall have the capacity to sample the airborne effluent being discharged, primarily gases and vapors.
- Sufficient capacity shall be provided for sampling the combined discharge, specifically gases and vapors, at a common point located inside the mechanical room downstream of the filters and fans.
- Where iodination is performed in specific laboratories, those hoods shall be equipped to accept appropriate HEPA and charcoal filters.
- Airborne radioactive effluent monitoring systems shall be designed in accordance with ANSI Standard N13.1, *Guide to Sampling Airborne Radioactive Materials in*

Nuclear Facilities (1969), specifically Appendix A, Guides for Sampling from Ducts and Stacks.

- A single-nozzle sample probe shall be designed inside the airstream for sampling gas and vapors, as specified in ANSI Standard N13.1.

Laboratory design considerations shall also include state-of-the-art design considerations, as specified by ANSI, and other acceptable industry standards, such as the following:

- National Council on Radiation Protection and Measurements (NCRP), Report No. 59, *Operational Radiation Safety Program*, Chapter 3, November 1, 1980.
- Hanson and Blatz, *Radiation Hygiene Handbook*, Section 9, Facility Design, 1959.
- Epoxy coatings, laminates, floor coverings, and protective coatings shall be utilized for ease of decontamination and to provide a protective coating that can be readily removed without extensive damage to the existing facility and surfaces.
- Sinks shall be either plastic composite or coated with epoxy or the equivalent to ease decontamination of surfaces. Stainless steel is also an option for sinks. Soapstone shall not be used.

Air filtration systems (activated charcoal/HEPA filtration) shall be installed and tested in accordance with ANSI/American Society of Mechanical Engineers Standard N510-1980, *Testing of Nuclear Air Cleaning Systems*. The activated charcoal and HEPA filters shall be tested with current state-of-the-art methods and techniques for filter efficiency and compliance with technical specifications at the factory and after installation at NIH facilities. Chemical fume hoods for radionuclide use shall be designed in accordance with the following industry criteria and technical specifications:

- Landis and GYR Powers, Inc., *Laboratory Control and Safety Solutions Application Guide*, 1993.
- ACGIH, *Industrial Ventilation: A Manual of Recommended Practice* (current edition).
- Hoods shall have a minimum face velocity of 100 m/s.

A typical chemical fume hood designed for hazardous materials is acceptable as a radioisotope fume hood. The hood design shall include smooth, nonporous surfaces for ease of decontamination. In addition, the fume hood shall be constructed of materials that will not generate mixed waste if the surfaces and the construction materials interact with the radioactive materials.

D.9.7 Vacuum Systems: Vacuum systems shall be protected with appropriate filtration (0.3 micron hydrophobic filter or the equivalent) to minimize the potential for contamination of vacuum pumps. Filters shall be on the suction side of the pumps, with exhaust to the outside of the facility and not recirculated into the mechanical spaces. Filters shall be located as close as possible to the laboratory in order to minimize the potential contamination of vacuum lines and to preclude and minimize decontamination and decommissioning costs. Filter housings shall be designed for easy filter replacement in order to minimize the possibility of maintenance worker contamination and to provide for easy disposal.

D.9.8 Irradiators Utilized in Medical Research: Irradiators are designed to contain significant amounts of radioactive material and therefore are designed with engineering controls as well as adequate shielding to perform the necessary functions utilized in medical research. However, the following facility design parameters are required for the construction to adequately house this equipment:

- Floor loads shall be assessed to ensure structural integrity given the amount of shielding, and associated weight, of this equipment.
- Consideration shall be given to the available means for moving this equipment to its location (e.g., loads on elevators).
- Because of the shielding requirements, this equipment is usually located on the lower floors of a facility (e.g., ground floor, basement, or subbasement).
- The room or facility housing the irradiator shall be secured or have the capability to be secured (locked).
- The NIH Division of Safety, Radiation Safety Branch, shall be contacted when the design and installation of an irradiator is considered.

D.9.9 Radiation-Producing Equipment and/or Machines: In accordance with the *NIH Radiation Safety Guide*, the NIH Division of Safety, Radiation Safety Branch, shall be notified when there is any change in the setup of radiation-producing equipment or machines. This includes purchase and installation of new equipment, changes in shielding, changes in the output of the radiation, or changes in usage of

the unit. With respect to the use of radiation-producing equipment and/or machines, the following design guidance shall be used:

- National Council on Radiation Protection and Measurements (NCRP), Report No. 102, *Medical X-Ray, Electron Beam and Gamma-Ray Protection for Energies up to 50 Mev* (Equipment Design, Performance and Use, 1989).
- NCRP, Report No. 49, *Structural Shielding Design and Evaluation for Medical Use of X-Rays and Gamma Rays of Energies up to 10 MeV*, September 15, 1976.

The documents referenced above shall be used by the Radiation Safety Branch to:

- Implement an "as low as reasonably achievable" (ALARA) program to minimize radiation exposure to occupationally exposed individuals and the general public.
- Provide the appropriate design criteria as they relate to radiation-producing equipment and/or machines.
- Provide structural shielding requirements for any new installations or installations undergoing renovations or changes.

The following factors, such as W (workload), U (use factor), and T (occupancy factor), as defined in the appropriate NCRP handbooks, shall be utilized to calculate and design the necessary shielding requirements. The dose equivalent limit for design purposes shall be 10-mRem public exposure and 500 mRem occupational exposure.

D.9.10 Non-Ionizing Radiation: This section applies only to MRI and high-power intensity lasers. With respect to the use of MRI devices, the following regulations and design considerations apply:

- U.S. Food and Drug Administration (FDA) regulations 21 CFR 892.1000, *Magnetic Resonance Imaging*.
- Security requirements for housing and enclosing the equipment.
- Warning placards, signs, and postings, which may also include barriers.
- Warning requirements for cardiac pacemakers as well as other prosthetic devices and/or equipment.
- Shielding requirements to minimize radiation exposure to electric and magnetic fields.
- Posting concerning electrical hazards.

With respect to the use of lasers, specifically high-power intensity lasers, the following regulations and design considerations apply:

- FDA regulations 21 CFR 1040, *Performance Standards for Light-Emitting Products*.
- ANSI Standard for the Use of Lasers, ANSI Standard 2136.1, 1986.
- Conference of Radiation Control Program Directors, Frankfort, Kentucky. *Suggested State Regulations for Control of Radiation*, Volume II: *Non-Ionizing Radiation* (latest edition).
- Security requirements for housing and enclosing the equipment.
- Warning placards, signs, and postings, which may also include barriers.
- Appropriate personal protective equipment warnings prior to entering and/or working with the equipment to mitigate and prevent eye and skin exposure.

A Class III laser system is a medium-pulse system requiring control measures to prevent viewing of the direct beam. Design and control measures emphasize preventing direct access to the primary or reflected beam. Safety eyewear is necessary and required with this class of laser.

High-power intensity lasers (e.g., CO_2 lasers) are classified as Class IV lasers in 21 CFR 1040. These lasers produce radiation so powerful that they can cause injury with a direct or reflected exposure, even when the beam is scattered or diffused by a rough surface or smoke screens. Class IV radiation lasers emit more than 0.5 W continuous output. Laser facilities shall be designed to minimize the use of reflective/refractive surfaces to provide additional protection to occupational personnel.

D.10 Laboratory Fire Protection

This fire protection section includes specific requirements for laboratory facilities. The general fire protection requirements are found in General Design Guidelines, Section: Fire Protection. All laboratory areas are considered Class “B” per NFPA 45 definitions.

D.10.1 Fire-Resistant Materials and Construction: All laboratory corridor walls shall have a minimum 1 hour fire rating. All 1 hour fire-rated partitions shall have 45 minute opening protection. Each vision panel shall not exceed 0.84 m^2.

D.10.2 Fire Dampers: Fire dampers shall not be provided on any fume hood system. Fire dampers shall not be provided in any laboratory fume removal exhaust system or in laboratory hoods per NFPA 45. Alternative protection of the fire-rated assembly shall be provided by means of one of the following:

- Independent risers from each floor in a fire-rated shaft or
- Steel subducts at least 558 mm in length shall be used at each branch duct connection of exhaust risers in which the airflow moves upward and the riser is appropriately sized to accommodate the flow resistance created by the subduct.

D.10.3 Automatic Sprinkler Systems: All sprinkler system designs shall meet, at a minimum, NFPA 13 Ordinary Hazard Group II spacing and hydraulic requirements. Open storage in the laboratories shall not be permitted, on a horizontal plane, within 0.46 m of the sprinkler deflectors (as measured vertically from the bottom of the sprinkler deflector to the horizontal plane). Enclosed perimeter storage (i.e., within cabinets) to the underside of the ceiling is permitted. In areas that also have a pressure differential at the ceiling, which can affect the operation characteristics of the concealed heads, the gasketed concealed heads shall be specifically listed for use in ceilings with pressure differentials.

D.10.4 Fire-Protective Signaling Systems: All laboratory corridors shall be equipped with ionization-type smoke detectors if the constructed width of the corridor is greater than 1.5 m.

D.10.5 Duct Smoke Detection: Duct smoke detectors shall not be installed in air-handling units of less than 7 083 L/s, in air handling units that serve only one fire area, or in fully sprinklered buildings. Where duct smoke detectors are installed, they shall be of the photoelectric type, connected to the building fire alarm system, and cause shutdown of the associated air handler upon alarm.

D.10.6 Fire Extinguishers: Laboratory fire extinguishers shall be located in the corridors. The maximum travel distance to an extinguisher, from any point, shall be 15 m.

D.10.7 Means of Egress: A minimum 0.92 m clear aisle space shall be maintained around laboratory benches and furniture.

D.10.8 Flammable Storage Cabinets: A flammable storage cabinet (FSC) shall be provided in each laboratory. Additional FSCs shall be provided per NFPA 45 requirements. All FSCs shall be constructed of metal. The exterior of all FSCs shall be appropriately signed. The FSC shall be located as remote as possible from the exit doors of the laboratory. FSCs shall not be installed beneath fume hoods. FSCs shall not be located in corridors. The integrity of the FSC shall not be compromised by its mounting method. The FSC shall not be vented.

D.11 Laboratory Pest Management

For general design considerations related to pest management, see General Design Guidelines, Section: Pest Management. Consideration of pest management shall be given to any function, finish, or detail contributing to pest infestation and harborage in or around a building. Design features shall promote cleaning and maintenance while minimizing pest ingress and harborage. Floor penetrations and void areas shall be minimized and completely sealed. The designer shall ensure that areas of pest ingress, such as doors, windows, loading docks, and so on, are fitted with appropriate pest-exclusion devices. Consideration shall be given to designs that minimize pest harborage and promote proper cleaning. Examples of harborages are inaccessible voids behind and under equipment and casework, unsealed cracks or joints between pieces of equipment or finish materials, or the use of unsealed foam or fiberglass insulation on pipes and equipment. The NIH Division of Safety, Integrated Pest Management Unit, shall be consulted to review and approve all plans for new construction or renovation of old space and to provide additional program-specific caulking and sealing information.

NIH Design Policy and Guidelines

Animal Research Facilities

Office of Research Facilities

A. Overview

The *NIH Animal Research Facility Design Manual* describes in general and specific terms the minimum NIH requirements for planning and designing facilities that house animals and fulfill related functions. Considerable animal research is conducted to support the NIH's mission to improve the health of the American people through biomedical research. *Guide for the Care and Use of Laboratory Animals (Guid*e), published by National Academy Press, covers all aspects of the care and use of laboratory animals, including institutional policies for monitoring animals and providing care. The *Guide* should serve as an aid in developing policies governing the care and use of animals based on the institution's particular requirements and in compliance with applicable Federal, State, and local laws and regulations.

In the United States, research facilities requiring the use of animals must conform to the *Guide* to be accredited by the Association for Assessment and Accreditation of Laboratory Animal Care (AAALAC). Thus, the NIH's animal facilities should reflect state-of-the-art materials and design features and must meet AAALAC accreditation requirements. The environment within the facility must provide for the health, safety, comfort, and well-being of the animals and staff. Plans for constructing and renovating animal facilities must be reviewed and approved by the NIH Office of Animal Care and Use (OACU). Animals are not allowed to be housed in laboratories or spaces other than approved animal housing facilities for longer than 24 hours unless the area is established as a satellite animal housing facility. Establishing a satellite animal housing facility may require short-term design modifications that facilitate monitoring the local-environment OACU requirements.

A.1 Animal Research Facility Activities

The activities performed in an animal research facility include, but are not limited to, providing routine animal and environmental maintenance, performing animal research, and providing general administrative services. In addition, an animal research facility requires a significant amount of support space. Environmental maintenance includes bedding changes, food preparation, routine cagewashing, room cleaning, pest management, and waste disposal.

Routine animal maintenance includes daily animal examination, routine pathology to determine colony health status, and animal breeding for colony maintenance. Animal research includes genetic studies; animal testing that requires the administration of drugs, chemicals, or biological agents; pathology; diagnostics; surgical procedures; imaging; phenotyping; behavioral studies; and record-keeping of a highly detailed nature. Animal research facility administration areas should provide space for a central reception area, veterinarian offices, office support staff areas, and technical and laboratory supervisory staff offices. Animal research support activities include animal shipping and receiving, decontamination of materials entering the facility, storing and dispensing of animal feed and bedding, cagewashing, laundry services, cold storage of medical pathological waste (MPW), and animal caretaker support requirements such as lockers and a lunch room.

A.2 General Staffing Patterns of an NIH Animal Facility

The number of staff in an animal research facility will vary according to the size of the facility. The staff may include a chief veterinarian, subordinate veterinarians, administrative staff, research and technical support staff, supervisory- and staff-level animal caretakers, and support staff for feed and bedding preparation and cagewashing. In addition, research staff members regularly enter and leave the facility.

A.3 Animal Research Facility Trends

Biomedical research is heavily dependent on animal research to create animal models for the study of human disease processes. Because fluctuations in the animal species of choice may vary from time to time, the facilities must be capable of meeting ever-changing animal research requirements. The design of these facilities must be flexible and adaptable.

A great deal of animal research at the NIH involves genetic mutations and manipulation (transgenic technology) of specific animal traits and testing these traits by performing behavioral studies, imaging studies, and biochemical studies. Toxicology studies are performed to observe the effects of drugs on developmental and metabolic processes and on behavior patterns.

Long-term observation of animals may dictate design features for a specific species. Until recently, rodents and nonhuman primates have been the primary research

animals of choice. There has been a dramatic increase in the use of aquatic species (zebrafish, sea urchins, and other marine species), resulting in the adaptation and renovation of older facilities and the potential need to accommodate aquatic species in new facilities. Large animals (primarily sheep and pigs) are used for cardiothoracic surgery and require preoperative and postoperative holding space. Dogs, cats, and chickens are used for specific types of research but are used in small numbers.

There is a trend to provide better and species-specific “enrichment” for nonhuman primates and large animals. Enrichment requirements will impact on design of the facility if the program calls for playrooms, natural light, views of activity, group housing, animal runs, and storage of toys.

Other trends in animal research facilities include an increased use of robotic cagewash equipment to supplement staff shortages and reduce staff injuries; heightened security measures; more extensive and expensive environmental controls to protect unique animal colonies; and an increased need for support facilities within the animal research facility such as diagnostic labs, conference rooms, and special function and core suites. Each of these trends demands special design considerations that must be addressed in the planning process.

A.4 User Input

The ultimate users, especially the researchers and veterinarians, shall be consulted in addition to the OACU during the development of Programs of Requirements and the design phases to truly meet the needs of the NIH. Users’ input shall be incorporated wherever possible and applicable in the project.

B. Programmatic Goals and Objectives

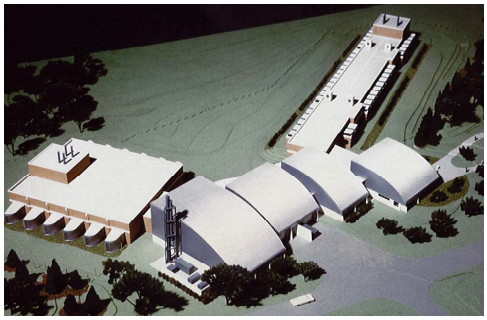

The NIH will provide state-of-the-art animal research facilities to enhance and maintain its position as the world leader in biomedical research. The NIH will accomplish this goal by constructing new animal research facilities and renovating older ones to meet ever-changing biomedical research requirements. These guidelines will be applied to new animal research facilities and, to the extent possible, to renovation projects. The following goals and objectives define the minimum recommended program requirements and recommendations for the design of animal research facilities. For specific requirements, refer to Animal Research Facilities, Section: Design Criteria.

B.1 Program Objectives

Program objectives must be determined as early as possible in the planning process. It is crucial to identify the variety of species that the facility should be expected to accommodate over time, the temperature and humidity range that each species can tolerate, and the degree of flexibility and adaptability required within the facility to accommodate different species. The designer should determine the cost impact of making some or all areas of the facility more flexible than others. In order to provide for an environment within the animal research facility that meets the program objectives, the designer will collect data on spatial allocations, functional adjacencies, user requirements, staffing projections, flexibility requirements, redundancy requirements, security requirements, architectural finishes, fixed equipment needs and circulation of personnel, material, animals, and waste.

Early in the planning process, the designer should work with the facility representatives to prepare a functional and adjacencies flow chart that will facilitate the design process. In addition to impacting the ease of doing animal-model-based science, the arrangement of critical adjacencies will greatly impact the quality of life of the animals, the caretakers, and the veterinarians. Appropriate adjacency planning will modify interference from noise and vibrations, economize circulation routes, and maintain the appropriate degree of cleanliness of the facility.

B.1.1 Planning Criteria: The animal research facility will be designed to house animals in an appropriate species-specific environment that meets or exceeds all applicable policies, guidelines, and regulations as outlined in the *Guide for the Care and Use of Laboratory Animals* (*Guide*), Public Health Service (PHS) policy, and animal welfare regulations. In addition, facilities must meet the minimum requirements to be accredited by the Association for Assessment and Accreditation of Laboratory Animal Care (AAALAC). The ideal facility will:

- Meet projected holding and programmatic requirements while providing for expansion and flexibility in space utilization
- Provide for efficiency of management through innovation and flexible design
- Be cost-effective in design, construction, operation, and maintenance
- Utilize innovative design and construction to minimize future energy, maintenance, labor, and expansion costs
- Provide an ergonomic and user-friendly work environment

B.2 Quality of Life and Environmental Considerations

It is important to recognize that the immediate environment directly and indirectly affects an animal's biological and behavioral responses. Not only does the environment in which they live (i.e., noise, light, vibration, sound, ventilation, etc.) affect the quality of life, but these factors also may adversely impact the research being conducted. At a minimum, animal holding and procedure areas must be designed to ensure animal well-being, meet research requirements, be able to be sanitized and easily maintained, and minimize experimental variables or maximize predictability.

B.2.1 Animal Well-Being: The facility should support a healthy social environment for the animals that mimics the animal's natural social environment. The characteristics of each species must be considered in deciding how to house a diverse animal species. There are few data comparing the relationship of quality or quantity of an animal's activity to its physical or psychological well-being. A cage does not necessarily limit the amount of animal activity, although it may alter the form of activity the animal can pursue. The need for exercise or induced activity is subject to the judgment of the animal science professional based on an understanding of the species or breed; its temperament, age, history, and physical condition; nature of the research; and expected duration of animal research facility residence. Examples of supplementary activity include running on a treadmill or

exercise wheel, walking on a leash, having access to a run, or moving an animal from its cage into an animal playroom/activity area. Provision shall be made for animals with specialized locomotion patterns to express these patterns, especially when animals are held for long periods. For example, ropes, bars, and perches are appropriate for brachiating nonhuman primates.

B.2.2 Employee Well-Being: The animal research facility is also a workplace for human employees. Therefore, the occupational health and safety of personnel must be considered. The environment shall be aesthetically pleasing to employees and consistent with the needs of investigators engaged in animal research. It shall be efficient, secure, and easy to maintain and perform animal caretaking services. Sufficient air supply, filtration, and exhaust shall be provided to minimize unpleasant animal odors and animal allergens. Provision of natural light (if structurally feasible), adequate work space, color, and ergonomic furniture systems are integral to a pleasing, functional, and effective work environment that will enhance productivity and aid in the recruitment and retention of quality personnel. In order to provide for an environment within the animal research facility that meets these goals, see Animal Research Facilities, Section: Space Descriptions, for information that impacts the quality of life of the animals and their caretakers.

B.2.2.1 Graphics/Signage: Without views to the outside or significant landmarks within the facility, orientation becomes a planning issue in an animal facility. It is recommended that a map of the corridor system be provided at strategic junctures in the hallways. Alternative wayfinding elements might be used such as directional markers on the walls or color-coded corridors or artistic symbols designating room or corridor use. Each room shall have a room number clearly displayed at its entry.

B.2.2.2 Other Amenities: Amenities such as lounges, break areas, training rooms, staff offices, and conference rooms shall be provided. Placement and size of these rooms shall be carefully thought out in order to maintain the integrity of the degree of facility contamination control that is defined in the program. Locker and shower facilities should be provided outside the animal barrier area for staff whose work does not involve animal contact.

B.2.3 Natural Light: Natural light is not recommended in areas that will house animals that require regulated lighting cycles. These include but are not limited to rodents, rabbits, and fish. Windows may be desired in areas that house large animals such as nonhuman primates, dogs, or farm animals. With the exception of

facilities housing larger farm species, most animal rooms should be equipped with artificial lighting systems that control the diurnal lighting cycle. Through the use of innovative design and construction, diurnal variation can be maintained. If windows are to be placed in animal rooms, veterinarians shall be consulted for placement of windows and window treatments.

The negative aspects of windows in animal facilities frequently dominate design, and opportunities can be missed to enhance the work environment with natural lighting. Where possible, windows should be provided in personnel and administrative areas.

B.2.4 Lighting: Fluorescent lighting is recommended in an animal facility. However, discussions shall be held with the veterinarian and researchers regarding the light spectrum and light covers of fluorescent lamps. Light covers should diffuse and soften the light so as to have a minimal effect on animals that may have higher than normal light sensitivity. Lighting should be waterproof, recessed, ceiling mounted, and sealed and caulked to prevent vermin infestation.

Lighting control is a major consideration, particularly in small-animal holding rooms. Lighting control may be required for large-animal holding or procedure rooms as well. Light intensity can have an impact on research results under certain circumstances and may differ by species. Whenever possible, lighting should be centrally controlled and monitored at the room level. Monitoring of the lighting control system should be independent from the method used to control the lights. Consideration should be given to direct measurement of room illumination or monitoring the electrical circuit feeding the room light. The ideal system would provide a local warning light alarm and, if required, remote audible alarms signaling lighting failures. Although it may be possible to group several rooms on a single timer, this should be discussed with the users. Animal protocols often call for diurnal lighting cycles (circadian rhythm) to be reversed or altered in duration for the researchers' needs or for the desired results of the experiment. These studies require lighting controls and automatic timers in all holding rooms and isolation cubicles. "Red light" or other lighting options within holding rooms, as determined by users, should be considered so researchers can enter a room during the dark cycle without affecting the animals.

Consideration should be given to providing a warning light outside the rooms that are on automatic timed lighting to indicate that the room is on the dark cycle.

B.2.5 Noise: Acoustical control is an important planning consideration and shall be evaluated during design. By examining adjacencies, the effects of noise can be addressed in the design layout. Most animals are stimulated and may be stressed by noise. Different species of animals will have different tolerances for high- or low-frequency noises. Certain frequencies can have an adverse affect on sensitive animals. These issues must be discussed with facility users.

Ventilated racks generate noise. The rack density in a room will affect the noise level. Mechanical equipment may generate noise frequencies that are not noticeable to humans but will potentially affect animals housed near the source of the noise. Equipment that generates noise should be remote or acoustically isolated from animal holding rooms wherever possible.

Large animals tend to be noisier than small animals, although avian species (birds) are noisier in relation to their size than rodents. Animal species that generate noise should be isolated from those that are noise sensitive by either distance or sufficient acoustical isolation. Noise conductivity through the duct system should be taken into consideration.

Although rodents can adjust to constant, low-level background noise, it should be minimized or removed through the use of innovative design.

In all situations, it is imperative to eliminate the effects of sudden and variable noise-producing elements, such as fire alarms, throughout the animal holding environments. Strobe lights must be used in mouse breeding facilities.

B.2.6 Vibration Stability: Vibration stability is important to maintaining a constant experimental environment for sensitive animals such as rodents. Therefore, rodent holding and test rooms should be located away from areas such as a cagewash, major circulation corridors where racks are frequently in transit, mechanical rooms, and elevator shafts. Vibration is not as much of an issue for large animals except in behavior testing rooms. Vibration studies should be performed to determine how best to achieve the maximum allowable vibration levels as determined by instruments and animals to be used in the area.

Vibration stability should be considered in an animal facility where specialized equipment will be used such as animal imaging equipment, electron microscopy, and electrophysiology procedures, including intracellular data collection equipment.

Vibration stability will be of greater concern if the animal facility is located on the upper levels of a building rather than at ground level because of structural considerations. Sensitive pieces of equipment may require an isolation slab. Some equipment can be stabilized using a dampening device.

B.3 Animal Research Facility Space

B.3.1 Ratio of Holding Rooms to Procedure Rooms: During the programming stage, the users should be consulted on whether animal holding rooms will house multiple species and whether animal holding rooms and procedure rooms should be designed to be interchangeable with minimal structural modification. Flexibility in design of these critical areas provides for rapid accommodation of future programmatic changes and efficient space utilization.

As a general rule of thumb, one procedure room for every three to four small-animal holding rooms should be considered. Clusters of isolation cubicles should have at least one procedure room per cluster. Suites should have a minimum of one procedure room within the suite. The ratio of procedure rooms to holding rooms for large animals shall be determined by scientific requirements and the specific program requirements of the facility. Most large-animal holding facilities will require an extensive surgical suite with its accompanying specialty procedure and prep rooms. Terminal procedures and autopsies on large animals are ideally conducted in separate locations from the surgical suite but can be performed in a necropsy/perfusion room or a specially designated procedure room.

B.3.2 Animal Research Facility Support Space: The ratio of animal facility support space to holding and procedure space is generally 2:1 or higher. Support space includes bedding and feed storage, decontamination areas for incoming animals and materials, a laundry, feed preparation areas, administrative areas, break areas, meeting/training rooms, lockers for animal caretakers, gowning areas, cagewash, autoclaves, marshalling areas, diagnostic laboratories, pharmacy, storage areas, and housekeeping closets. Storage areas should include space for cage and rack equipment, general support supply storage, and locked cabinets where researchers can store small research-specific items.

Shared-use spaces may include surgical suites, imaging suites, behavioral suites, transgenic suites, radiology rooms, and irradiator(s), in addition to the operational support spaces. Shared-use, central, or core facilities may be considered as part of

support space or as part of procedure/holding space depending on how the program chooses to define the space. The definition of this space should be established early in the programming process to facilitate net-to-gross calculations.

B.3.3 Office and Administrative Space: Animal facility administrative areas should be designed using standard administrative space parameters. There may be a programmatic need for separate offices for Government and contract supervisory staff. Administration offices should be located near the main animal facility entrance. This locates the management personnel in a position to observe the movement of personnel and equipment into or out of the facility. Guests, vendors, and service people should have access to the animal facility administrative areas without entering the animal housing and support areas. Ideally, each veterinarian, manager, and, if required, Contract Project Officer should have a private office. Space should be allowed for office equipment such as copying machines and fax machines. A separate area for housing centralized computers and monitoring equipment should be considered. The administrative area shall include conference rooms, a break room, and access to toilet facilities that are separate from those used by the animal caretakers.

B.3.4 Area Allowances: The following calculations are for the purposes of design and construction and not to determine real estate space allocations for purposes of charging rent. See Volume: Appendices for information on the methodology used to calculate gross and net area.

B.3.4.1 Grossing Factor: For budget purposes, the gross building area generally includes the total area of all spaces, including basements, mezzanines, penthouses, mechanical, electrical, and communications spaces, and enclosed loading docks. The gross building area will exceed the net area by a grossing factor. A range is given for these factors, depending on design choices for internal circulation patterns, interior partitions, utility distribution, and mechanical equipment configurations. For animal research facilities, a grossing factor of at least 2.00+ is typical. A higher grossing factor could be possible depending on the choice of caging systems and circulation configurations.

B.4 Flexibility and Adaptability

Animal research facilities should be designed to maximize the animal holding capacity and related utility services. The animal facility should be flexible and

adaptable to accommodate changes in function and protocols without having to make major changes to the facility. Spaces shall be designed to hold multiple species over time as protocols change. Individually planned or customized spaces are to be avoided.

B.4.1 Services and Systems: Utility systems within the animal research facility must be capable of providing all the services necessary for scientists to conduct their research and for the animal husbandry staff to properly care for the animals. It is equally important that provisions be made for utility services to accommodate unanticipated demands brought about by new technologies or changes in research protocols. A percentage of reserve capacity shall be designed into the primary building systems to accommodate increased animal densities. All components of the utility systems shall be planned and designed to allow all required access, maintenance, and repairs without entering the animal holding or procedure rooms. Maintenance spaces should be configured so they can be expanded without displacing animal research functions whenever possible. See Animal Research Facilities, Section: Design Criteria, Mechanical, for details on design of animal facility heating, ventilation, and air conditioning (HVAC) systems.

B.4.2 Expansion/Renovation Considerations: Vertical and horizontal expansion of an animal research facility shall be considered during the planning phase. It must be possible to construct any expansion with minimal interference to the operation of the facility and the least disturbance to the animal population. It is important for planning for expansion to be compatible with existing utility systems.

B.4.3 Connection of Utilities to Animal Facility Space: Utility services must be distributed to each individual space. The connection point of each service should be in a uniform position relative to the space and detailed to provide simple extension into the space without disruption of adjacent modules. These services may run in interstitial space, allowing animal holding or procedure space to change without increasing or upgrading the capacity or location of central infrastructure systems. Changes would be primarily to terminal systems (i.e., piping and power connections to apparatus and equipment within the space).

B.4.4 Services and Systems Distribution Concepts: HVAC units serving animal facilities shall be designed with parallel HVAC system arrangements and or with standby equipment with capability to ensure continuous operation during equipment failure and scheduled maintenance outages. It is acceptable to have a common air

intake system for both animal holding and other parts of the building. The animal area exhaust system must be independent of the non-animal parts of the building.

Utilities and services, including communication and information systems, shall be organized into specific zones, both horizontally and vertically, to provide distribution of systems and services that can be extended to each animal holding and procedure module. The choice of design and location of the utility distribution system(s) is a product of utility function, cost-effectiveness, and ease of access for maintenance, future services, and remodeling during the life of the animal research facility. At a minimum, a percentage of the holding and procedure rooms shall be designed for interchangeability of use. The percentage and locations of rooms with drains should be determined during programming.

B.4.4.1 Special Considerations for the Connection of Utilities to Animal Facility Space: The architect/engineer (A/E) shall make the consultants aware of the following special considerations for the connection of utilities to animal facility modules or space.

- Small-animal holding rooms other than isolation cubicles should each have a sink or the capability of easy installation of a sink if a need should present itself. Isolation cubicles are not required to have a sink, but a sink should be located in an adjacent procedure location/room. In all situations hand-washing sinks should be convenient to all holding locations. Large-animal holding rooms should have a sink outside the holding room area or suite.
- Farm animal holding rooms and aquatic tank rooms require floor drains. Most animal rooms for other species at the NIH are not hosed down, so drains should be avoided except in areas that may be converted in the future to hold aquatic or large-animal species. When floor drains are present, consideration should be given to the appropriate size of the drain lines, maintenance of the drain traps, drain caps and flush systems, and floor slopes to drains.
- The type of animal watering system should be determined (automatic or bottled) during programming. If automatic watering is not desired at the onset, consideration should be given to designing a system that can accommodate a percentage of automatic watering for possible future needs. Consideration should be given to the quality of water required. In some situations, highly purified water such as reverse osmosis (RO) may be required. In many cases there is an additional requirement for the treatment of the water prior to distribution (i.e., chlorination, acidification, or neutralization). Remote monitoring of the water

treatment process is required. In order to accommodate water treatment concerns, appropriate equipment, piping, and plumbing systems must be considered.

- Consideration must be given to steam connections, clean steam, and RO water with additional polishing systems in the cagewash and bottle-filling area of the facility. Clean steam connections will be required wherever there is an autoclave. The users should also be consulted as to the need for RO water in dishwashers, if required, and frequency of RO drops in procedure rooms.
- The racking/caging system for small animals should be determined as early as possible in the planning process in order to determine the type and number of duct connections. Each racking system may have a different type of connection that will affect the placement of the exhaust duct. Consideration must be given to ducts above the plenum and the location and length of the exhaust taps. In addition, some racking systems are now designed with dynamic local area network (LAN) line connections.
- Placement of electrical outlets and waterproof protective covering for the outlets should be carefully considered for all animal holding rooms. Electrical loads must be sufficient to accommodate all the needs of animal holding and procedure rooms. Ideally, electrical outlets servicing ventilated rack turbo units and other equipment should be located high enough to prevent draping electrical cords, which are a safety hazard.
- LAN line connections. Consideration must be given to the requirement of LAN connections within the animal holding room.

B.5 Planning Module

Modular planning techniques have traditionally been employed to provide for an adaptable facility. Modular planning schemes shall be used, to the maximum extent possible, for animal housing and procedure space. Modular planning is based on the concept of three-dimensional units of space and services, which are used in a repetitive fashion for each type of function within the animal facility. The dimensions of the structural bay, both vertically and horizontally, must be carefully evaluated with respect to the laboratory planning module, mechanical distribution, and future expansion plans. The planning module must be developed on the basis of an evaluation of operations and protocols and the anticipated numbers and species of animals.

In animal facilities, the most common unit of space is the animal housing/holding room. Ideally, when planning a multifunction animal research building, the animal holding room modular size should be determined on the basis of cage or rack system size. This scheme may or may not be similar in size and configuration to the standard laboratory module. The width of the animal room is determined by the number and types of animals, the way in which they are housed, whether by cage or rack, and the cleaning methodology that will be employed. Room length is determined on the basis of housing/caging options and minimum aisle width between racks but also must accommodate service space for sinks, cleaning equipment, change stations, and so on. The height of the animal room is primarily a function of the maximum rack height anticipated, including rack fans. There must also be enough space above the rack to provide uniform airflow distribution in the room.

Wherever possible, rooms shall be clustered to provide separate zones for small and large animals, taking into consideration the differences in rack dimensions, waste disposal requirements, acoustical and vibration requirements, caretaking requirements, investigators, protocols, disease status, and airflow requirements.

B.5.1 Animal Facility Holding, Procedure, and Support Module Variations: The length, width, and height of the animal facility modules are dependent on the intended use of the space. There may be a need to a have a variety of sizes of small-animal holding rooms with or without individual or shared anterooms. Animal holding and procedure suites are a combination of modules used for a specific research purpose. Within a suite, the rooms may be subdivided or positioned differently from the general layout of the animal facility. Other support spaces such as the cagewash or administrative areas are composed of multiple modules without wall divisions to accommodate large pieces of equipment or open office space.

B.5.2 Structural Bay Spacing: The structural loads of an animal facility are quite substantial because of the potential use of concrete masonry partitions and heavy equipment that is needed for the day-to-day operation of the facility. The most basic requirement of the structural system is that it not interfere with other systems or preclude future changes. Therefore, the spacing of both the vertical and horizontal components of the structural system must be coordinated with the room and corridor configuration and utility systems distribution.

B.6 Functional Relationships and Zoning of the Animal Research Facility

The zones in an animal research facility can be grouped into four categories that are further characterized as “clean” or “dirty.” Clean or dirty refers to the potential for the animal or material to transmit diseases to other animals from outside sources. For example, animals from an unapproved source are considered “dirty” until they have been evaluated for health status during a quarantine period. Barriers within the facility are “clean” and should receive only “clean” approved animals and materials; used cages are “dirty” and should not move into designated “clean” areas because they may be a source of contamination.

B.6.1 Public Zones: Public zones include public corridors and elevators, multi-use loading docks, supply rooms, laboratories outside barrier areas, and areas where staff wear street clothes. Public zones are categorized as “dirty” because there is no control of potential animal contaminants in these areas.

B.6.2 Transitional Zones: Transitional zones are defined as areas of movement between public areas and animal holding and procedure areas or between zones housing different animal species that could potentially transmit diseases between each other if they were in close contact. Transitional zones may include airlocks, gowning areas, locker rooms, feed and storage areas, and dedicated “clean” and “dirty” animal elevators.

B.6.3 Specific-Pathogen Free (SPF) Zones: SPF zones are areas where animals are free of **defined** diseases. The degree of SPF may vary in different parts of the facility just as the degree of “clean” and “dirty” may vary. The level of SPF and “clean”/“dirty” will be defined by the veterinarians and the users of the facility. Most housing/holding areas are located in the SPF zone. An exception to this occurs when “dirty” animals (nondefined disease status) are needed for the research. A separate housing area that contains isolation housing and/or has an airlock shall be provided for this purpose.

B.6.4 Contaminated Zones: Contaminated zones are areas where dead or infected/diseased animals are located or where “dirty” equipment is transported or stored. There are instances where conventional housing is required for “dirty” animals such as a quarantine room or an area of the facility specifically for research using “dirty” (non-SPF) animals. Circulation routes must be closely examined in these situations so as to minimize cross-contamination of SPF animals.

"Dirty" corridors are those used for moving soiled cages and materials to the "dirty" side of the cagewash facility. Rooms where necropsies or perfusions (terminal procedures) are performed are defined as "dirty." A single corridor system can be managed so as to provide the desired degree of cleanliness and species separation defined by the facility program.

B.6.5 Zone Relationships: Within the animal research facility, the flow of materials, cages, animals, and personnel must be accommodated in an efficient and economical manner. Adjacencies shall be planned to maximize operational affinities and minimize travel distances. Relationships among deliveries, animal receiving, food and bedding, quarantine, housing, procedure rooms, storage, cagewash, staff locker rooms, and administration spaces must be effectively planned. It is also essential that designs consider adjacencies based on the variety of species that are anticipated for the animal research facility.

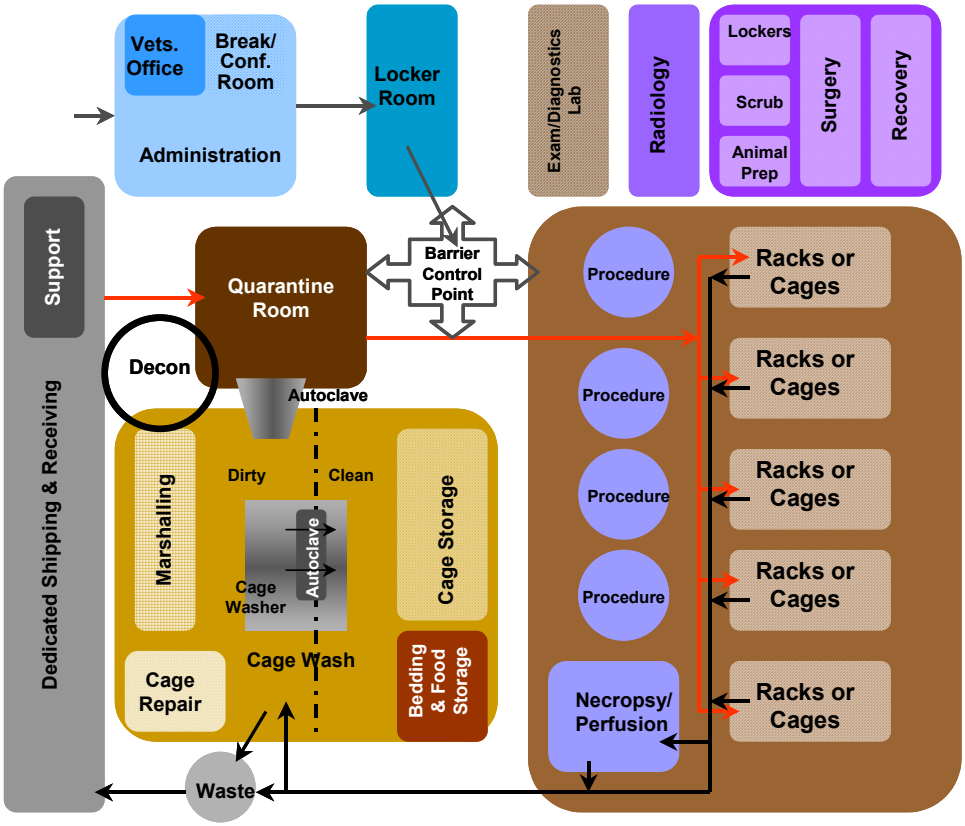

Figure B.6.5 Functional Relationship Diagram for an Animal Research Facility

B.7 Circulation of People, Animals, and Materials

Circulation space is a critical factor in controlling contaminants and enhancing operations and procedures within the animal research facility. Planning of circulation focuses on the movement of cages and racks in the facility, since this is the most intensive use of this space. Most importantly, during the planning phase, the design team decides to what extent the corridor system helps manage the potential for contamination and to what extent management dictates certain protocols of time and direction of movement. Personnel, equipment, and supplies should move from areas of least contamination to areas of greater contamination. Movement of personnel, equipment, and supplies should be planned to minimize the potential for contamination of cleaner areas. Consideration should be given to the equipment and areas required to permit recirculation of supplies, personnel, and equipment. For example, autoclaves located near the "dirty" cagewash permits the recirculation of contaminated caging back into the cagewash area, and convenient location of locker rooms and shower facilities in many cases permits personnel to move from "dirtier" areas back into cleaner situations.

B.7.1 Horizontal Circulation Corridors: Commonly accepted circulation systems include a single corridor, a dual "clean" and "dirty" corridor, or a single corridor with unidirectional flow. The NIH does not use the dual-corridor system when planning new facilities.

B.7.1.1 Single-Corridor System: In a single-corridor scheme, traffic flow is in both directions between the animal holding room and the cagewash area. The most significant advantage of a single-corridor system is its efficiency of space utilization. The disadvantage is the potential for cross-contamination in the corridor when "clean" and "dirty" cages share space. Congestion caused by moving animals, cages, and supplies through a single corridor is also problematic. However, contact between "clean" and "dirty" materials can be minimized by carefully scheduling pickups and deliveries, covering cages when moving them, and using a unidirectional circulation system. With this management technique, congestion and contamination can be minimized. Single-corridor systems shall be equipped with appropriately placed air locks and doors to maintain the desired level of facility sanitation and security. Placement of air locks must be discussed with users. Doors should have controlled access where necessary.

B.7.1.2 Dual-Corridor System: Contamination control is the primary rationale for choosing a dual-corridor system. The dual corridor system has animal holding rooms leading to two separate corridors that are dedicated "clean" and "dirty" corridors for the movement of cages. The flow of cages is unidirectional and may involve two single-loaded corridors in a small facility or one double-loaded and two single-loaded corridors in a larger facility. Dual corridors are not an efficient use of space and will increase the gross-to-net ratio.

B.7.1.3 Corridor Width: Corridor width should be dependent on the flow of traffic within the animal facility and the amount of storage that will be available in or near the facility. The *Guide* recommends a corridor width of 1 825-2 450 mm, but 3 050-3 650 mm-wide corridors allow for more flexibility in circulation in larger facilities. Two animal cage racks must be able to pass each other comfortably in the corridor. Sufficient storage must be designed in or near the facility so that equipment does not have to be stored in the corridors. Marshalling alcoves for racks and carts should be provided so that corridors are kept free of this equipment.

B.7.2 Vertical Circulation Elevators: In multilevel facilities, dedicated "clean" and "dirty" animal elevators are required. The elevator for transporting "clean" material should be located near the "clean" side of the cagewash area, while the elevator used for "dirty" material should be in close proximity to the "dirty" side of the cagewash area. The elevator size and location must accommodate the volume of materials to be handled in the cagewash, animal and material receiving, and waste removal areas. Elevators that will be used for transport of animals and animal facility equipment must be constructed of highly durable and cleanable materials. The elevator cab floor material must be of the same material as the floor in the animal facility. The elevator car interior should have guardrails at appropriate heights for the typical racks and carts that will be used in the facility. Elevator doors must be of sufficient height to accommodate the tallest racks that will be used in the facility. Consideration should be given to an elevator door width that can accommodate at least two racks side by side.

At least one elevator should have the capacity to handle extremely heavy loads if, for instance, an irradiator is planned in the facility on a level below the loading dock level of the building. There should be adequate redundancy in the number of elevators to handle freight, staff, and animals in the case of an equipment breakdown. This can be accomplished by locating the "clean" and "dirty" elevators near each other so that they can serve as backups to each other.

B.8 Security

See General Design Guidelines, Section: Security, for general design guidance. The objective of security in an animal research facility is to ensure the safety of the animals, staff, equipment, and data. Animal research facility users must be aware of the levels of security at the site, building, animal research facility, and room levels. At NIH-owned or -leased facilities, the site is the first level of security. The site may be open to the public, or it may have controlled access depending on the location. The second level of security is the building. Access to the building must be managed. Air intakes and any central utilities must be safeguarded from intruders. The third level of security is the access to the animal research facility. Administrative staff, research and veterinary staff, maintenance staff, and vendors will require access to the animal research facility. A central reception area is recommended as a gatekeeper entrance area to the animal research facility. Security features must also be provided for the loading docks and service entries for the animal facility. Finally, the fourth level of security is the specific animal rooms, containment suites, surgical suites, pharmacy, or other areas within the animal facility with a higher level of controlled access and surveillance. An internal facility system designed to limit/control access to animal holding rooms and other areas has proven to be a useful facility management tool.

B.9 Loading Docks

See General Design Guidelines, Section: Site/Civil, for general loading dock design guidelines. The loading dock that services a building with an animal facility should include a dedicated bay for animal and material receiving and waste removal. The animal care loading dock must be viewed as an extension of the animal care facility. Excluding pests and creating conditions that promote proper sanitation, at this location, are imperative to maintaining a pest-free facility that meets or exceeds AAALAC guidelines. To achieve these desired goals of pest exclusion and good sanitation, the dock facility must be properly sited, constructed of durable, cleanable materials, sized to meet current and future program needs, flexible in use, and effective as a barrier between the outside and the “clean” environment of the animal care facility. The animal-receiving loading dock should include:

- A dedicated animal facility bay that is visually protected for security. The dock must be physically segregated form other dock space and dock functions. This includes vehicle docking and material/supplies staging space.

- A receiving vestibule that is temperature and humidity controlled to protect valuable research animals. Overhead doors should be fitted with proper sweeps, gaskets, and brushes to exclude insects and rodent pests around the perimeter of the entire door. These doors and doorframes must provide an effective seal, when closed, to exclude insect and rodent pests. The loading dock doors should be equipped with air curtains or other similar devices to exclude flying insects and to create a dust and dirt barrier when the receiving or personnel doors are opened.
- A dedicated route of transportation into the animal facility if possible.
- A large pass-through autoclave if bedding is to be sterilized at the loading dock.
- An area to decontaminate the animal containers before they enter the animal facility. The decontamination area can be at the loading dock or at the point of entry to the animal facility. The interior surfaces should be covered with materials that facilitate proper sanitation and ease of cleaning. These materials must be durable enough to withstand regular cleaning and disinfection. Facilities must be available for loading dock washdown and cleanup. Floor drains should not be designed into the receiving area of the loading dock.
- A cold storage room for animal carcasses.
- The dock entry points (e.g., materials receiving or personnel) must be isolated from solid waste compacting, handling, and storage operations. Solid waste operation can be attractive to pest species that are invasive to the facility.
- Recycling containers should not be sited on or near an animal facility loading dock. Waste should not be staged for removal inside the receiving area of the loading dock.
- For guidance on disposal of radioactive medical pathological waste from an animal facility, see Animal Research Facilities, Section: Space Descriptions, Animal Research Facility Support.
- There should be no exposed conduit, piping, ledges, wall-mounted lights, and so on. These provide loafing and nesting sites for nuisance birds and are difficult to clean.
- Wall, corner, and door guards should be of a type used inside the animal care facility (i.e., stainless steel, caulked and sealed at installation).
- Caulking and sealing of all floor, wall, and ceiling penetrations; wall placards; switch plates; outlet covers; and so on are required. Caulking and sealing should entail the use of the same products and procedures as those used inside the animal care facility.
- Electrical service should be provided on all walls of the receiving area and the elevator lobby to power electric light traps for pest exclusion.

- Lighting should be indirect to the loading dock to reduce attraction of flying insects. Do not use wall-mounted lighting. Do not install lights directly above receiving or personnel doors.
- Provide a dedicated animal loading dock manager's office.
- Provide chemical storage.
- Provide gas cylinder storage.

C. Space Descriptions

Animal research facilities present a wide assortment of planning challenges. The challenges range from differences in environmental requirements by species and building zones to the durability and water resistance of the architectural finishes to room flexibility that can accommodate a variety of species over time. This section of the Guidelines presents information for the designer to use in planning the animal facility space requirements in relation to the species needs and caging systems and the zone the space occupies.

C.1 Animal Housing and Holding Areas

Generally, any area where animals are held for more than 24 hours is treated as a holding area. Housing/holding areas are usually located in a defined specific-pathogen free (SPF) zone of the animal facility. See Animal Research Facilities, Section: Programmatic Goals and Objectives, for definitions. However, there are instances where conventional housing is required for “dirty” animals such as a quarantine room or an area of the facility designated for research using non-SPF or “dirty” animals.

In an effort to increase a facility’s flexibility, it is essential to plan for both anticipated and potential species usage and rack and caging type. The animal housing or caging system chosen is one of the most important elements to consider in the planning process. Animal housing and most procedure space should be carefully designed to facilitate animal well-being; meet research requirements; minimize experimental variables; and provide isolation from wide temperature and humidity variations, vibration, and noise sources. The caging system should provide adequate space to permit freedom of movement and normal postural adjustments; a comfortable environment; and an escape-proof enclosure that confines animals safely with easy access to food, water, and ventilation. The caging system must also meet the biological needs of animals (e.g., maintenance of body temperature, waste elimination, and reproduction). Ideally, the chosen caging system should (a) be ergonomically friendly, (b) be of proven design and functionality, (c) be durable, (d) maximize available holding space, and (e) be a standard shelf item with readily available replacement parts. All holding rooms must be designed to be easily

cleanable and minimize pest harborage. See General Design Guidelines, Section: Pest Management, for additional information. Consideration should be given to providing space to record data and store records and supplies. All caging systems and animal holding rooms must meet or exceed all requirements outlined in the *Guide for the Care and Use of Laboratory Animals*, PHS policy, and animal welfare regulations.

C.1.1 Small-Animal Requirements: Small animals include mice, rats, hamsters, guinea pigs, reptiles, fish, and birds. Each species will have different caging and environment requirements. Each species must be held in separate rooms or cubicles unless, in the case of rodents, ventilated racks are used to house them in order to provide separation of animals at the rack or cage level. Each rodent rack should provide for either bottle or automatic watering systems. Where isolation or quarantine space is required, space should be considered for a separate anteroom or procedure rooms.

A small-animal holding room should be capable of housing different species at different times and in different caging systems. In most situations, holding rooms should not have windows, although the doors may have an observation window or viewport that can be light-tight. If windows are present within an animal holding room, systems must be in place to guarantee that the room's normal diurnal variation can be maintained. In addition, windows must be designed to preclude the ability to see the animals from outside the building and also to address security issues. Anterooms are optional for all animal holding rooms but should be considered on an as-needed basis for the facility.

Small-animal holding rooms should be located convenient to a central cagewash, but at a minimum they should be separated from the cagewash by a corridor. Likewise, to minimize the impact of noise and vibration, the holding rooms should be separated from mechanical rooms or other noise-generating areas in the facility. This is particularly necessary for barrier areas where genetically sensitive animals are held.

Design features and finishes should be durable and encourage effective sanitation while at the same time be safe for personnel. All surfaces should be water resistant, impact resistant, and skid resistant. Electrical outlets should prevent shock hazards and have moisture-proof covers in areas where moisture is a problem.

Each small-animal holding room shall have a sink with hot and cold water. There should be a place to hang a mop, ideally near the sink in each room. Consideration must be given to the various management styles that may be utilized within each animal holding room. Some husbandry situations may require the use of biological safety cabinets (BSCs) or a laminar flow change hood. The impact of these systems and, in the case of ventilated racking systems, turbomotors must be considered in determining the room's heat load and air circulation patterns.

C.1.1.1 Rodents: Rodents include mice and rats. Mouse cages may hold up to five mice per cage. Rat cages are larger than mouse cages and can accommodate up to four animals depending on size. Sometimes rats and mice are housed in the same room. Mixing species in a room should be avoided if at all possible. However, if this becomes necessary, ducted ventilated racks or other environment isolation equipment should be used.

Mice and rats are housed in "shoebox" cages that are stacked in racks specifically designed for this purpose. There are numerous caging and racking systems on the market. Racks may be single sided and placed parallel to the room walls or double sided and placed perpendicular to the wall. Room configurations utilizing a combination of the two systems have also been used with success. There are also systems that can be arranged in a "T" formation. The proposed rack layout will determine the projected facility holding capacity. Ideally, the rack arrangement should allow adequate space for a caretaker to roll a cart up to or between the racks for animal transfers and bedding changes and for storing maintenance items that may include feed barrels, mop racks, and trash cans. Consideration should also be given to providing a flexible layout that can accommodate someone with a disability to maneuver between the racks if required. The minimum recommended space between racks is 915 mm. Some animal facility programs may require a BSC or a change station in each holding room to make cage and bedding changes or rodent transfers or to perform minor procedures. The designer should allow room for a changing station in addition to the holding racks when this need is identified in the program. Consideration should be given to the additional heat load provided by change cabinets or ventilated racking systems.

C.1.1.2 Reptiles: Reptiles can be held in modular flexible species holding rooms. Temperature and humidity control are the only special requirements for reptiles. The temperature should range between 20 and 29.5 °C, and the relative humidity should range between 33 and 60 percent. The users should determine whether they want UV light in the room. UV light provides vitamin D to the reptiles.

C.1.1.3 Birds: Birds can be held in modular flexible species holding rooms. The type of bird containment will depend on the species, the study, and the investigator's requirements. Some birds might be held in cages while other species might require an aviary that mimics their natural environment. Although a drain is not required in a bird holding room, the room cleaning method must be closely reviewed. If the room will be hosed, then the room shall have a drain.

C.1.1.4 Aquatics: Aquatics include fish, sea urchins, and amphibians. The trend in aquatic tank holding rooms for fish is to have a single large room that can hold many tank racks. However, there may be different requirements for other aquatic species. Lighting shall be timer controlled for circadian rhythm studies. Amphibians are sensitive to temperature differences and may require "sunning" areas. Noise and vibration can adversely affect aquatic species and should be controlled or buffered as much as possible.

Water is the life support medium for aquatic species. The water system supporting the various components of the system must be sized properly. A major concern for the designer of an aquatic facility is the water weight. Aquatic holding rooms must be designed to structurally support the load.

Water temperature, quality, pH, degree of hardness, and salinity must be tailored to the specific aquatic species and must be closely monitored to avoid disastrous effects on the population. The levels of ammonia, nitrates, chlorine, dissolved oxygen, and carbon dioxide in the water must also be monitored.

In some cases, a percentage of supply water can recirculate. Recirculation parameters shall be discussed with the user representatives designing the building. The location of pumps and other mechanical equipment associated with the aquatic facility is a critical design feature and should be discussed with experts in the field.

Appropriate filtration should be considered for the removal of particulates and nitrogenous wastes. A flow monitoring system should be incorporated in the system to detect a loss in pressure or decline in water levels. Emergency power should be considered for the pumps and lights in the aquatic facility. Floor drains should be installed in all tank and procedure rooms where aquatic species will be housed. Floor drains are essential, and flood proofing is an important feature to consider in design, especially if the holding tanks are on an upper floor. Floors should be sloped 3 to 10 mm to the drain. Drains should be rustproof and flush with the floor. Consideration should be given to providing some way of trapping and removing debris from the drain opening (i.e., removable basket). Other flood-proofing considerations include putting a small lip and a tight seal sweep at the door base. All ceilings, walls, sills, and floors should be water resistant. All lighting fixtures should be splash resistant. All electrical boxes and conduits should be corrosion resistant and splash resistant. The HVAC system should work in tandem with the water supply system in controlling the room and water temperature. It is important to remember that in order to maintain the desired water temperature, the room temperature may not be ideal for those who must work in the room.

In order to define space usage in an aquatics facility, the following rules of thumb should be considered. Of the total space allocated for the aquatics area, 10 percent should be the nursery, 15 percent should be procedure space in small rooms off the tank areas, and 5 percent should be for raising aquatic food (i.e., shrimp). Space is also needed for preparation of dry food. Space should be allocated adjacent to the water tank holding rooms for mechanical system components, live food production, supplies, and additional procedure areas. The location of pump rooms should be given special consideration. A shop with storage capacity should be provided for working on equipment. A quarantine area may be required for incoming animals even in a facility that breeds its own study population of animals. The location of the water pumps and recirculation piping will have a major effect on the design of this area. Each aquatic module should include a sink and adequate bench space for procedures and caretaker activities.

An aquatics facility may require easy access to a fume hood because highly carcinogenic and teratogenic chemicals are used to create mutations in fish. A holding area may be required close to the fume hood for short-term holding of fish that have been treated with mutagens. These needs should be discussed with the potential users.

C.1.1.5 Insectary: At the NIH, insects are studied as the carriers (vectors) of transmissible human diseases or for genetic research related to human disease. Examples of insects used at the NIH are mosquitoes, sand flies, and fruit flies. Design requirements may vary for different insect species, but the general concepts for an insect breeding and research lab are the same for all species. The following general design criteria should be addressed when planning any insectary:

- Temperature and humidity control
- Light control
- Pest management methods
- Use of nonporous materials in construction
- Methods of insect containment
- Species-specific breeding requirements
- Cold storage
- Research/lab supply storage
- Food preparation requirements
- Adjacent research procedure space requirements

A major health and safety concern in an insectary is the inadvertent release of infected or genetically manipulated insects into the environment. Insect containment can be managed by using carefully controlled procedures in a facility that is designed well. Access to the insect barrier shall include a series of sealed, controlled access doors separated by small vestibules containing devices appropriate to trap the species used in the facility. These may include wall-mounted light traps or temperature control devices to produce an environment such that an insect could not survive passage through the space. Mosquitoes are slowed at temperatures between 2 and 10 °C. If a mosquito were to escape the barrier into a cold vestibule, it would drop to the floor and eventually die.

Insect breeding rooms may have a temperature range of between 10 and 28 °C and a relative humidity of 75 percent. Surfaces within breeding rooms should be smooth, nonporous white materials. Ceilings should be low (2.3 m) to allow recapture of escaped insects and ease of cleaning.

Insecticides cannot be used in an insectary to control pests such as cockroaches or ants. Environmental rooms must be designed with tightly sealed, water-tight electrical outlets and fixtures. Drains are not recommended as they can harbor unwanted pests or serve as uncontrolled breeding areas. Doors to the facility should be of solid core construction. Shelving in breeding rooms or insect procedure rooms

shall be stainless steel wire open construction to eliminate any hiding places for contaminating insects or other pests.

Lights in breeding rooms must be provided with timer controls to recreate natural environment conditions that are essential for breeding.

Screened doors shall be used as necessary within insect barrier areas. The screen material and mesh size are important factors to consider. The mesh size will be dependent on the insect species housed in the area. The screen material must be rust resistant and durable.

C.1.2 Rabbits: Rabbits fall in a category between small and large animals. They are considered large animals because their requirements for surgery follow large-animal guidelines. However, rabbits are typically housed in the rodent space of an animal facility. Rabbits are typically housed one per cage. Rabbit racks are designed specifically to hold rabbit cages. A typical rack will hold six to eight rabbit cages. Larger cages are used for breeding. For rabbits weighing up to 4 kg, each rabbit requires 0.28 m^2 of floor space. For rabbits weighing over 4 kg, each rabbit requires 0.37 m^2 of floor space. Rabbit cages contain waste pans that must be changed frequently (perhaps three times per week). Rabbits may spray corrosive urine outside their cages. Cleaning requirements for the room and descaling the racks become issues where rabbits are held. Wall and floor surfaces must be very durable and cleanable in rabbit rooms because frequent scrubbing is necessary to remove urine. Consideration should be given to a pre-filter/grid system at the exhaust because frequent filter changes will be required because of a large amount of fur shed. Adequate aisle space has to be allowed for ease in changing out the pans and working with larger breeding cages.

C.1.3 Large Animals: Large animals include nonhuman primates (NHPs), cats, dogs, and farm animals. In the case of some large animals, especially nonhuman primates, consideration should be given to providing natural light, adequate exercise areas, group housing, means for animal communication, and well-equipped play areas with toys, games, and televisions. This must be undertaken without sacrificing safety and may depend upon the nature of the research. Ideally, large-animal holding rooms and activity areas should be designed to provide an enriched, visually complex environment for NHPs and other species where data are available to suggest a benefit.

Since large animals may be noisy, they should be housed away from quieter areas of small-animal rooms, administration spaces, and research laboratories. In some situations, anterooms are also recommended to minimize the potential of releasing escaped animals into the rest of the colony. Each cage should provide for either bottle or automatic watering systems. Consideration should be given to self-cleaning drains for some species holding rooms. Ideally, dogs, sheep, and pigs should be provided with runs if they are to be held for a long period of time. The size of the run utilized should at a minimum meet the requirements for daily exercise of the animals.

C.1.3.1 Nonhuman Primates: NHPs are categorized as Old World (i.e., macaques, cynomolgus, and baboons) or New World (i.e., marmosets and owl monkeys). There can be great variation in the size of NHPs even within the same species. NHPs may be housed in individual cages, but they also may be paired or group caged. Group housing may be used in some instances for infants or juveniles.

The size of an NHP room must accommodate working safety considerations. Animal caretakers must be able to work within the holding room but be out of reach of the NHPs. Aisle space between the cages will be determined by the species and caging and racking systems. This dimension will exceed 915 mm to prevent the NHPs from reaching a worker who is standing in the middle of the room. Space should be allowed between housing racks and cages to permit maneuverability. This space has an impact on the overall room dimension.

Space in group cages should be enriched with structures such as resting perches, visual barriers, and, when housing some species, shelters. Some species should be provided items for swinging or climbing. NHPs are very social animals. The current philosophy is to provide enrichment areas for them to play and communicate. Enrichment can include providing them with the ability to view movement through windows into the general corridors so that they can see the caretakers or to the exterior of the building. In some circumstances, thick Lexan panels in lieu of traditional caging may be considered in some NHP facilities for enrichment and socialization.

NHPs are noisy, messy, and destructive animals. Therefore, sound attenuation and durable finishes are important considerations in the design process. Exterior windows and holding room door lites must have adjustable shutters or blinds to allow

the animal rooms to be light tight if necessary and to aid in the maintenance of normal diurnal variation.

C.1.3.2 Dogs: Dog species used for biomedical research are commonly medium-size breeds such as the beagle, but larger species (e.g., foxhounds) are not uncommon. Dogs are noisy and messy, so sound attenuation and durable finishes are important considerations in the design process. Flush drains are required. Facilities that house dogs may have outdoor runs for enrichment of the animals. Dogs should be able to see other dogs and other movement, so partitions can be of the chain-link variety. Consideration should be given to providing design elements that facilitate socialization of the animals.

C.1.3.3 Farm Animals: Farm animals used for research at NIH include sheep, pigs, goats, and occasionally cattle and horses. Research farm animals may be housed indoors or outdoors. Farm animals are often used to test surgical procedures that require long-term observation of the animals. Preoperative and postoperative holding areas may be required. Indoor facilities must have walls that can withstand the forces these animals can exert on them. Farm animals are noisy and messy, so sound attenuation and finishes are important considerations in the design process. Flush drains or trench drains will be required.

C.1.4 Cubical Housing: Cubicles are small rooms or containment compartments within a larger room or suite of rooms. Cubicle housing may be used for isolating animals of different health statuses, conducting timed day/night studies, separating different species, or providing specialized barrier areas. Cubicles offer the advantage of isolating a small segment of the animal population and permit housing of multiple species in a single room. Cubicles are particularly useful for quarantining incoming animals and may preclude the need for a separate quarantine room. Cubicles are also useful in the containment of hazardous substances used in animal studies, provide an added degree of security, and reduce odors and allergens. Cubicle housing areas should be designed to have either positive or negative air pressure in relation to adjacent spaces based on intended use of the cubicle. If the cubicles are prefabricated units, they can be readily disassembled to convert the room to other uses. Ideally, cubicles should be designed to accept two single-sided rodent racks or one double-sided unit or one NHP racking unit. Although management may decide to utilize static non-ventilated cages within the cubicle, cubicles should be equipped

with two exhaust drops to be used if ventilated caging is used in the area. If over-head doors are used on this type of space, consider providing automatic door operators.

A higher level of protection can be attained through the provision of individual air supply and exhaust in each cubicle. Air may pass through a high-efficiency particulate air (HEPA) filter at the supply, exhaust, or both. Each cubicle may also have its own lighting and watering systems. Access to a manual override must be restricted through the use of a key or card key system. Uniform lighting is ideal throughout the cubicle, but, because cubicles are small, light may not reach the back of the holding rack. Therefore, considerations should be given to specifying vertical fluorescent lighting to be installed in the corners of the cubicle in addition to ceiling lights. If vertical lighting is utilized, the bottom of the tube should be specified to be 457.2 mm from the floor. The fixtures must be caulked, sealed, and moisture proofed.

C.1.5 Containment Suites: At a minimum, all animal facilities at the NIH shall be designed as animal biosafety level (ABSL-2) facilities. Containment suites should have negative air pressure relative to adjoining areas. For specific requirements, refer to the Centers for Disease Control and Prevention (CDC) NIH publication *Biosafety in Microbiological Laboratories* for ABSL planning and design.

C.1.6 Isolation Areas: Isolation cubicles should be provided to house animals that may have an infectious disease or animals that may be more susceptible to disease (i.e., immunocompromised, etc.). Ideally, cubicles should be designed to accept two single-sided rodent racks or one double-sided unit or one NHP racking unit. Although management may decide to utilize static non-ventilated cages within the cubicle, cubicles should be equipped with two exhaust drops to be used if ventilated caging is used in the area. Isolation rooms should be on the “dirty” side of the animal facility, perhaps near the necropsy/perfusion room.

C.1.7 Procedure Rooms: Animal procedure rooms may be either shared or dedicated. A shared procedure room provides space for working with animals from multiple animal rooms and frequently involves multiple investigators and possibly more than one species. Dedicated animal procedure rooms provide space for working with animals maintained in a single room or a small cluster of animal rooms that may have direct

access to the procedure laboratory. Procedure rooms should be equipped with a fume hood and/or BSC, stainless steel counters with downdraft sinks/tables for rodent surgery, exam lights, refrigerator, and wall-mounted or mobile cabinets. Alternatively, ducted BSCs can be considered for areas that may require a BSC with some exterior venting capability. There should be a sufficient number of electrical outlets to support all anticipated equipment. Central gas (oxygen, carbon dioxide, etc.), a passive gas scavenger line, vacuum, and high-pressure air may be needed in some or all procedure rooms. A low benchtop may be needed for either a desk surface or a microscope. Procedure rooms should be designed so that they can be converted to animal holding rooms.

C.1.8 Behavioral Testing Rooms: The requirements for behavioral testing rooms will be driven by the species to be tested. All behavioral testing rooms should have the same HVAC as other animal holding/procedure areas. All behavioral testing rooms should be light-tight and acoustically protected and have information technology connections to data collection areas outside the testing room. All testing room requirements shall be reviewed with the users.

Rodent testing rooms may require deep countertops at desk/table height to hold special equipment. The rooms should have shelving for storing testing equipment. Floor material in rodent testing rooms can be either sheet vinyl or epoxy. However, consideration should be given to the cost of installing epoxy flooring at a later time if the area might be converted to holding rooms. Rodent testing rooms shall have light cycle controls. At least one rodent testing room should be capable of holding a water tank. This room should have a sink and a drain. The floor in the water tank room should be of a waterproof material. The water tank rooms will require a video camera mounted above the tank with connections to a data collection system. If the data collection system is to be within the tank room, a visual barrier must protect it so that light or movement from video screens or personnel does not distract animals. Each wall of the room should have either a light box or a tack board to mount cue cards. NHP testing rooms often require very sophisticated electrical connections. Extra power lines and clean data and LAN lines are needed for computers. Several computer network connections may be required. Cable trays if required should be mounted around the perimeter of the room at ceiling level. NHP testing equipment may be robotic and may require structural considerations. Lighting needs may vary according to the type of testing to be done in the rooms. Light cycle controls may be needed. Cameras and projection equipment will be used in some of the rooms. NHP testing rooms may be individual rooms specifically designed for behavior testing or

they may be pre-fab testing chambers that are assembled on site. Some testing chambers may require individual exhaust drops, whereas other test boxes contain fans and do not require additional ventilation considerations. This need should be discussed with the user.

C.1.9 Summary Space Schedule for Animal Housing:

The designer should develop an overall planning module for animal holding rooms based on the proposed racking and caging systems.

Table C.1.9 Summary Space Schedule for Animal Housing and Holding Areas

Space Name	Area (m^2)	Equipment/Furniture and Requirements	Ceiling Height (mm)
Animal room (small-animal housing), mice, rats, hamsters, guinea pigs, and rabbits	Number and species of animals and racking systems determine the size of the space.	Cages or racks, change station or BSC, sink mop racks, feed barrel, bedding barrel, space for cart, and counter space.	3 000
Insectary	Species dependent.	Possible environment control room. Stainless steel wire shelving, smooth nonporous white surfaces. All openings must be watertight. No drains. May need screens, partitions, and light timing control.	2 300
Animal room (large-animal conventional housing), cats, NHPs, and dogs	Number and species of animals determine the size of the space.	Cages, runs, and socialization areas. Sinks and work areas must be outside the holding room.	3 000
Farm animals	Number and species of animals determine the size of the space.	Pens. Indoor holding area must have trench or flush drains.	3 000
Animal room (cubicle housing)	Number and size of the housing unit or degree of isolation required determine the size of the space.	Cubicles or flexible film isolators.	3 000

Space Name	Area (m^2)	Equipment/Furniture and Requirements	Ceiling Height (mm)
Procedure room	22.68	Fume hood, BSC, counters, sink, exam table, refrigerator, wall cabinet, and undercounter cabinets.	3 000
Rodent behavior testing room	22.68	Deep countertops at desk/table height to hold special equipment, shelving for storage of testing equipment, sink, and a drain when a water tank is specified.	3 000
NHP testing rooms	Equipment and testing protocol determine the size of the space.	NHP electronic testing equipment and cable trays.	3 000

C.2 Diagnostic/Pathology Laboratory

C.2.1 Diagnostic/Pathology Laboratory: Diagnostic laboratory services are ancillary to the treatment area and facilitate diagnosis of animal health status. The services may include gross and microscopic pathology, clinical pathology, hematology, microbiology, clinical chemistry, and other appropriate laboratory procedures. The space will be equipped with corrosion-resistant countertops with an integral sink, a refrigerator, downdraft tables, and casework. CO_2 is the only central gas that may be required; the need for compressed-air, medical-grade oxygen, or vacuum should be discussed with the user. Specialized fume hoods may be required as determined by the users. A ventilated BSC (Class II, type B1) may be required for examination of infectious specimens. Low benchtops may be required for microscopes. The diagnostic laboratory will be equipment intensive. There should be adequate electrical outlets to handle many small tabletop pieces as well as larger pieces such as incubators, centrifuges, or scintillation counters.

C.2.2 Necropsy/Perfusion: This area provides space for examining deceased animals or performing terminal procedures. It is ideally located either near the diagnostic pathology lab or on the circulation route that is used for waste exiting the facility. It must be equipped with a downdraft table (sized for the species held in the facility) that is equipped to collect hazardous chemical waste, a stainless steel counter, and a sink with wall cabinets. A fume hood or BSC may be needed. CO_2,

gas, vacuum, and a gas scavenger line shall be provided. Provisions should be made for carcass storage. Either a refrigerator/freezer in the room or, for large animals, an adjacent walk-in refrigerator is recommended. Photographic equipment may be used in the room. A light box may be required. The room pressure should be negative in relation to adjoining areas.

C.2.3 Summary Space Schedule for Diagnostic/Pathology Laboratory:

Table C.2.3 Summary Space Schedule for Diagnostic/Pathology Laboratory

Space Name	Area (m^2)	Equipment/Furniture and Requirements	Ceiling Height (mm)
Diagnostic laboratory	12.96	Countertop (stainless steel, raised rim, with integral sink and splash backs), casework, refrigerator or cold room, freezer, storage gas cylinders, downdraft table, fume hood, and BSC.	3 000
Necropsy	11.88	Downdraft necropsy table, counter, sink, base, trimming table and wall cabinets, refrigerator, freezer, light box, and gas scavenger.	3 000

C.3 Animal Surgery

Functional areas for surgery should include a surgical support area (i.e., storage, instrument prep), lockers, and janitorial rooms; an animal prep area; a surgeon prep area (i.e., scrub area, lockers/change room, rest room); operating room(s), and a postsurgical recovery/intensive care area. Intensive care/ recovery rooms should be located near the surgical suite. The surgical suite should be located away from high-traffic corridors and potential sources of contamination such as cagewash, necropsy, and waste storage. Ideally, separate locker, housekeeping, and toilet facilities should be provided as an integral part of the surgical suite. The surgical suite should have an intercom system connected to all rooms of the suite. Ideally, the suite should be an isolated unit with controlled/restricted assess. Survival surgery for small animals may be conducted in procedure rooms or in operating rooms.

C.3.1 Locker Room: This area provides space for surgical personnel to change before and after surgery. Lockers should be provided for short-term storage of personal items. Consideration should be given to planning a janitor's closet (with a floor-mounted mop sink) and a toilet room in this area.

C.3.2 Surgeon Scrub Room: This room provides space for surgical personnel to clean up before and after surgery and should have direct access to the surgical suite/operating rooms. It will be equipped with a scrub sink and disposable scrub brush dispenser. Ideally, the scrub area should be an isolated area, not utilized as a thoroughfare for animals or supplies.

C.3.3 Animal Surgical Prep Room: This area provides space for holding and preparing an animal subject for surgery. The room should have two doors to provide one-way traffic into the surgical area from the general circulation/housing area into the surgical area. It should have direct access to the operating suite/room. The prep room will be equipped with a procedure table, storage cabinet, stainless steel counter, and sink with wall cabinets. A downdraft table and a wet prep table may be required. At each procedure table/location in a prep room, there should be vacuum, a waste anesthesia gas scavenger line, and compressed medical gas lines (i.e., oxygen, medical-grade air, nitrogen, etc.). A controlled-access drug box should be considered in the prep room. There should be space for a refrigerator and a portable anesthesia unit.

C.3.4 Operating Room: This area provides space for surgical procedures on animals. In order to maintain a sterile environment, consideration should be given to a door lock system that will lock the operating room door from the outside if the door to the adjacent room is open. Compressed medical gases (i.e., oxygen, medical-grade air, nitrogen, etc.), waste anesthesia gas scavenger units, and vacuum lines shall be provided. Overhead surgical lights and a double light box to view x-rays are suggested. Operating rooms are equipment intensive and require additional electrical outlets to support fixed and mobile equipment needs. All of the operating rooms should have easy access to a central fluid-warming cabinet and contain a viewing window to the exterior surgical suite corridor.

C.3.5 Recovery Room: This area provides space for animals recovering from surgery and the effects of anesthesia. The recovery room/cubicle shall be designed to meet the requirements of NHP or other large-animal intensive or postoperative recovery care. Each room or cubicle should be able to house one or more

specialized environmental support units designed to provide a controlled environment (i.e., oxygen tension, humidity, temperature, etc.) or single cages or holding racks, depending on the species to be accommodated. Ideally, the room should have two doors to provide one-way movement from the surgical suite and out to the general circulation to return the animal to its housing unit. The room or cubicle should be equipped with a benchtop, a sink, and an oxygen line. Compressed medical gas, vacuum, and a waste anesthesia gas scavenger line may be required, as well as a refrigerator and drug storage areas. A controlled access drug box should be provided. Desk space should be provided for computer monitoring equipment and charting area.

C.3.6 Surgical Supply and Surgical Work Room: This room will provide space for surgical supplies and work space. It should have direct access to the operating room and the general circulation corridor. It will be equipped with lockable casework, sink cabinets, and sterilizers. The room is organized with one-way flow from "dirty" to "clean." Cleaning equipment such as sinks, washers, ultrasonic cleaners, and autoclaves are accessed from the "dirty" side, with instrument pack, prep, and storage on the "clean" side toward the operating room. Reverse-osmosis or deionized water may be needed for instrument wash equipment. Clean steam is required for the sterilizers. The designer should evaluate the need for gas, heat, and steam sterilizers within the facility.

C.3.7 Summary Space Schedule for Animal Surgery Areas:

Table C.3.7 Summary Space Schedule for Animal Surgery Areas

Space Name	Area (m^2)	Equipment/Furniture and Requirements	Ceiling Height (mm)
Animal surgical preparation room	11.20	Procedure table, storage cabinet, counter, sink w/wall cabinets, fluid-warming cabinet, central gases, controlled-substance safe, and refrigerator.	3 000
Operating room	18.80	Operating table, portable anesthesia machine, instrument table, suction cart, isolated power unit, major surgical light, medical gas dispenser, gas scavenging device, x-ray illuminator, special monitoring equipment, and white board.	3 000

Space Name	Area (m^2)	Equipment/Furniture and Requirements	Ceiling Height (mm)
Scrub and gown room	8.75	Surgeon's scrub sink, casework, and storage cabinets.	2 400
Locker room	0.56	Full-length lockers and benches.	2 400
Toilet room	Size per plumbing code	Water closet, lavatory with mirror, and appropriate toilet accessories.	2 400
Surgical work and supply room	13.50	Casework, sink, instrument washer, sterilizer, and tables.	2 400
Postoperative intensive care (recovery) room	11.20	Cage or rack, counter with sink, medical-grade oxygen source, wall cabinet, refrigerator, and gas tank storage.	2 400

C.4 Pharmacy

A pharmacy area shall be provided in the vicinity of the procedure room and surgery suite, but it does not have to be within the surgical suite. It should contain an appropriate level of security in addition to a drug vault and a controlled access drug box. It should have some bench space, a desk area, a sink, and a refrigerator. Lockable cabinets should be provided for drug and supply storage. Data lines should be provided in the area for inventory control. High-density movable storage systems should be considered for pharmacy storage.

Table C.4 Summary Space Schedule for Pharmacy

Space Name	Area (m^2)	Equipment/Furniture and Requirements	Ceiling Height (mm)
Pharmacy	11.20	Drug vault, controlled access drug box, work surfaces w/binder bins and lateral files, sink, and refrigerator.	2 400
Pharmacy storage	14.00	Lockable cabinets, high-density movable storage system.	2 400

C.5 Radiographic Suite and Irradiator Room

The radiographic suite consists of a darkroom, control booth, and radiographic room. It should be convenient to the surgical suites and accessible to other parts of the animal facility. It is common for facilities to require more than one style or size of x-ray unit depending on the research needs (examples of different types of x-ray units include fixed table-mounted unit, dental, rodent, etc.). The designer must establish the requirements of the facility and design the suite accordingly. The x-ray equipment, animal subject, and entry should be visible from the control booth. Radiation safety should be consulted for any special shielding requirements.

C.5.1 Darkroom: The darkroom provides space for developing x-ray film and may house an automatic film processor or developing tanks, sink, film bin and light-tight loading bench, countertop, red light, and wall-mounted film illuminators. A silver recovery system must be provided if required by the processing equipment. The room must be equipped with a lightproof door and a warning sign. An electronic interlock should be provided that prevents the red light from lighting and entry door from opening while the film bin is open.

Entrances to the darkroom and the internal layout of the darkroom must provide access to individuals with disabilities. Based on some facility layouts, multiple darkrooms may be provided within animal facility support spaces. In this case, at least one accessible darkroom must be provided. Where only one darkroom is planned, it shall be accessible to individuals with disabilities.

C.5.2 Radiographic Room: This room provides space to perform x-ray procedures on animal subjects. It will house radiographic and fluoroscopic x-ray unit(s) with a table- and wall-mounted film illuminators, spot illuminators, and wall-mounted storage cabinets. Storage may be required for film archives and portable imaging equipment such as ultrasound machines. Provide a pass-through interlocking box for film transfer between the radiographic room and darkroom. Specialized power requirements for each machine must be taken into account in the design of power distribution. Some counter space shall be provided. The specific requirements of the units to be installed in the area must be determined by the designer. Shielding of all walls and doors must be provided in accordance with the NIH Division of Safety. An electronic interlock system between the x-ray equipment and entry door lock will be as follows:

- The electric lock is activated by x-ray equipment.
- X-ray equipment shall not operate unless the entry door is closed and locked.

C.5.2.1 Control Booth: This booth provides protective space for personnel to control the x-ray unit and is located in the radiographic room.

The NIH Radiation Safety Branch should review and approve all design documents and inspect all construction relative to the radiographic equipment.

C.5.3 Irradiator Room: A cesium irradiator is used primarily to irradiate rodents or sterilize tissue culture specimens in order to conduct further research. An irradiator is a large piece of equipment with a radioactive cesium source housed within the unit. The unit can weigh up to 3 628.8 kg. If the irradiator will be transported to its permanent location via an elevator, the elevator must have the capacity to accommodate the irradiator's weight. In addition, the approach to the room must be direct and free of obstacles that may prevent installation of the equipment. Appropriate electrical connections are required and should be on a backup generator. The room housing an irradiator must have a controlled-access door that is locked at all times.

The irradiator room does not require special shielding because the shielding is built into the instrument. The room should have some shelving and a benchtop work area. IT connections are required for a local computer to collect data while the unit is running. **The NIH Radiation Safety Branch must be consulted and must approve the design of the room and the access route for the irradiator**.

C.5.4 Summary Space Schedule for Radiographic Suites and Irradiator Room:

Table C.5.4 Summary Space Schedule for Radiographic Suites and Irradiator Room

Space Name	Area (m^2)	Equipment/Furniture and Requirements	Ceiling Height (mm)
Darkroom	5.76	Automatic film processor, sink, film bench and loading bins, countertop, and wall-mounted film illuminators. Must be accessible to persons with disabilities.	3 000

Space Name	Area (m^2)	Equipment/Furniture and Requirements	Ceiling Height (mm)
Radiographic room	22.95	Radiographic and fluoroscopic x-ray unit with table, wall-mounted film illuminators, and wall-mounted storage cabinet.	3 000
Irradiator room	11.00	Cesium irradiator, lab benches, data ports or LAN connections, and desk space.	3 000

C.6 Decontamination and Receiving

This space is used to decontaminate the containers in which newly received animals and materials arrive so as to reduce the transfer of vermin or contamination from outside the facility. Animals may be transferred from their delivery containment unit into clean holding units at this location, or they may be moved to the holding room to be transferred locally. If equipment or other materials will be chemically decontaminated in this area, consideration should be given to providing a grid floor with a chemical collection unit under the grid that can automatically neutralize the chemicals before they enter the sewage system. A large drain and hose bib will be required for this space if materials will be chemically decontaminated. The space should be located between the animal loading dock and quarantine. It shall be equipped with a sink, drain, hose bib, desk, and benchtop. Adequate storage should be provided for both waste and clean equipment. Caretakers in rodent receiving areas may use temporary isolation cabinets to separate animals from different sources.

C.6.1 Quarantine Area: Incoming animals may be quarantined prior to entering the animal holding area. Self-contained cubicles may be used for small animals held in the facility. Each cubicle may have its own exhaust and watering systems. A pass-through autoclave shall be considered for a larger quarantine room. The quarantine room shall be located close to receiving and the cagewash. It should have a sink, bench work area and shelving, and exam lights. A small diagnostic lab with benchtop centrifuges and other lab equipment may be required in close proximity to the quarantine room.

C.6.2 Vestibules: Vestibules should be located as required to prevent contamination of animal holding areas and “clean” areas of the animal facility, for sound isolation and security. Vestibules may be appropriate at the point of entry into the facility, into

a suite of isolation rooms, between areas that hold different species, or between animal and administrative areas. Doors are to be equipped with bristle-type door sweeps. Consideration should be given to provisions for staff to gown/degown at entry vestibules. A crossover bench or pulldown seat should be considered in gowning areas as well as space to store "clean" gowning paraphernalia and discard bins.

C.6.3 Summary Space Schedule for Decontamination and Receiving:

Table C.6.3 Summary Space Schedule for Decontamination and Receiving

Space Name	Area (m^2)	Equipment/Furniture and Requirements	Ceiling Height (mm)
Animal receiving room	11.20	Countertop, stainless steel, raised rim, w/integral sink and splashbacks, casework, stainless steel exam table, refrigerator (domestic type), electronic animal weighing scale, and exam light. The following equipment is applicable only when more than the minimum net area (11 m^2) is provided: bathtub and floor-mounted electronic animal scale.	3 000
Quarantine room	11.40	Self-contained cubicles or flexible film isolators, exam area, and sink.	3 000
Vestibules		Shelve storage for gowning, separate waste bins.	3 000

C. 7 Cagewash

C.7.1 Cagewash: The cagewash houses equipment for cleaning and sanitizing animal cages, trays, lids, and water bottles. In addition, the cagewash area may house bedding disposal and bedding filling equipment and storage for "clean" bedding. During the planning phase, the method and route for bedding delivery and bedding disposal between the loading dock and the cagewash must be defined. Automated delivery and discard systems for bedding, food, and waste are available and should be considered for large facilities. These

systems may have special space requirements at the loading dock and in the cagewash area. The cagewash should be convenient to animal holding but distant from administration offices and personnel areas.

The cagewash equipment may include a bottle washer, a cage and rack washer, tunnel-type washers, acid neutralization tanks, robots, and an autoclave. The autoclave should be of sufficient size to contain full-size or multiple cage racks. In some applications, a large, pass-through autoclave with controls on both sides may be adequate to serve the needs of both the “clean” and “dirty” sides. This may eliminate the need for duplication of expensive capital equipment. The autoclave should be provided with “clean” steam to extend the usable life of the equipment. The species housed in the facility, the capacity of the facility, the number of wash cycles per week, the number and duration of staff shifts, and the redundancy and capacity of other washers determine the equipment type, size, and complexity.

The cagewash area should be divided into a “dirty” side and a “clean” side. A third area containing the wash equipment should be considered in large cagewash operations between the “clean” and “dirty” sides. There should be no personnel access between the two sides. The sides may be divided by a glass partition with a telephone or paging system for communication.

Access to the “dirty” side should be through double doors opening in the direction of traffic. Automatic openers should be installed to control the doors. The doors should be impact resistant and have door sweeps. The “dirty” area must be designed for washdown activities. Linear space is needed for marshalling incoming cages and racks, dumping bedding, breaking down cages, emptying bottles, and loading washers. The “dirty” area should be equipped with a scullery sink, bedding dump station, waste disposal equipment, automatic water manifold flush station, chemical neutralization, prewash stall with a grid floor, a water fountain, and emergency eyewash and shower. A pit may be required to prep or descale the racks and cages.

The “clean” area is equipped with a large autoclave, bedding dispenser, animal drinking water, flush station, and water bottle filler. Linear space for marshalling is also required on the “clean” side. A unisex toilet room and water fountain should be provided in both “dirty” and “clean” areas. Both sides should be designed to promote proper cleaning and minimize pest harborage.

Cage and rack washers feature a chamber of sufficient size to accommodate two or more cage racks or large cages. The rack washer should be placed in a pit to eliminate the need for ramps. Pits must be surfaced with rustproof grating materials and must be easily accessible and cleanable. Separate pits shall be designed for equipment pit(s) and drip pit(s). Grating-covered drip pits must extend into the clean area to allow the clean rack to drip dry (provide separation between the “dirty” and “clean” pits). The equipment pit should be sealed, and the space around the washing equipment should be sealed to form a complete barrier between the “clean” and “dirty” sides of the cagewash area. The tunnel washer transports cages on a continuously moving conveyor through a prerinse, detergent wash, rinse, final freshwater rinse, and drying sequence. These units are also suited for water bottles, small cages, and other small equipment. There should be a minimum of 4 feet of clearance around the tunnel washer for maintenance. A common enclosed equipment service space must be provided between the “clean” and “dirty” sides to provide for cagewash equipment maintenance.

Efficiency of water usage must be considered in planning, as this will impact the type of equipment purchased. Some water used in the rinse process may be recycled. Water may have to be treated to eliminate chemical and mineral deposits. Acid neutralization, depending on the size of the facility, may be required and should be considered during the planning phase.

There is a trend toward robotizing some or all of the cagewash functions in larger facilities. The facility must have sufficient throughput to warrant the cost of robotic equipment. Safety walls must separate the areas where people enter the robotic area from the actual equipment. Redundancy should be considered when designing a robotic cagewash facility. Consideration should be given to having one robotic cagewash line and one conventional cagewash line. A robotic cagewash requires a marshalling area, conveyor belts, a bedding dump station, an automated cage handler, an index tunnel washer, a cage and rack washer for larger or nonstandard size cages, a steam sterilizer, a bedding dispenser, a bottle-filling station, and other equipment associated with the robotic system. Additional robotic system options such as dust control equipment may be considered.

All materials and finishes should be moisture resistant, sealed, and caulked. Finishes in the cagewash area should stand up to frequent high-pressure water cleaning. The type of equipment used in a cagewash will require high-voltage, multiphase electrical sources, high temperature, high-volume water, and large quantities of clean steam.

The HVAC requirements of the cagewash area must be carefully evaluated to ensure the safety and comfort of the personnel working in this environment.

C.7.2 Storage: Adequate storage space must be planned for clean cage racks, bedding and feed, any special clothing and supplies, cleaning chemicals, husbandry supplies, and procedure room supplies. Storage for chemicals and detergent drums shall be located away from heavy traffic zones. Wire-bar shelving is recommended.

C.7.3 Cage Repair Room/Shop: A cage repair room is used primarily for large animal equipment and should be located near the large-animal holding area and near the large-animal cagewash entry. Equipment will be repaired and will then need to be washed. The repair shop does not have to be within the confines of the animal holding area, although it is desirable to have it within the facility. Adequate electrical outlets shall be provided for shop equipment. Task lighting may be required. Benchtop space is required.

C.7.4 Feed and Bedding Storage: This area will provide space for bulk storage of feed and bedding. Calculate feed and bedding storage for the "worst-case scenario" of the species that the facility may have to accommodate and protect storage space from being "squeezed out" of the facility. Storage of feed and bedding should be calculated on the basis of a predetermined reserve supply capacity, anticipated maximum consumption per time period, and maximum holding capacity of the facility.

C.7.5 Summary Space Schedule for Cagewash Area:

Table C.7.5 Summary Space Schedule for Cagewash Area

Space Name	Area (m^2)	Equipment/Furniture and Requirements	Ceiling Height (mm)
Cagewash room	Equipment determines the size.	Cage rack washer, autoclave, bedding dispenser, acid neutralizing equipment, feeder bottle filler, scullery sink, bottle washer, and dump station. Provide a prewash stall. Tunnel washer may be provided in a higher capacity research facility.	3 000
Clean cage storage room	37.72	Stainless steel shelving; clear floor space.	3 000
Cage repair shop	21.00	Work benches, sink, welding booth with fume hood, and gas cylinders.	3 000

Space Name	Area (m^2)	Equipment/Furniture and Requirements	Ceiling Height (mm)
Feed and bedding storage	Animal species and census determine the size.	Pallets and deli refrigerator.	3 000

C.8 Animal Research Facility Support

Animal research facility support includes a laundry room, feed diet preparation room, and cold storage for animal carcasses.

C.8.1 Laundry Room: Clean linen, from either within the facility or a commercial laundry, is distributed though the receiving office to locker rooms and gowning rooms. Based on program requirements, a laundry area may need to be provided within the animal facility. Space must also be provided to accommodate receiving clean linens if laundry is accomplished outside the animal facility.

C.8.2 Feed/Diet Preparation Room: Many animals require special diets. The feed preparation room shall have deep bowl sinks to wash and sanitize fresh produce, shelving, and storage cabinets. One or more commercial-size refrigerators will be required for food storage. Countertops with adequate electrical outlets shall be provided for "kitchen" equipment such as blenders and hotplates to prepare the food.

C.8.3 Cold Storage for Animal Carcasses: Both the necropsy room and the loading dock require some form of cold storage to hold animal carcasses for examination and for discard. A refrigerator is adequate for storage of small animals, but a walk-in, cold-storage room will be required for larger animals and at the loading dock. The room should have open mesh or slat stainless steel shelves. The floor should have a drain and a lip at the door to contain any fluid spills. Separate storage facilities must be provided to house animal carcasses that contain radioactivity. These storage facilities must not have floor drains. If animal carcasses or remains contain radionuclides, they are handled like other radioactive materials.

C.8.4 Equipment Storage: This area will provide space for shelves to store equipment.

C.8.5 Summary Space Schedule for Animal Research Facility Support Areas:

Table C.8.5 Summary Space Schedule for Animal Research Facility Support Areas

Space Name	Area (m^2)	Equipment/Furniture and Requirements	Ceiling Height (mm)
Laundry room	14.00	Commercial washer and dryer, shelves, layout table, dirty linen hamper, and shelves.	3 000
Feed/diet preparation room	7.50	Kitchen wall and base cabinets, sink, range, and refrigerator.	3 000
Cold storage for animal carcasses	Unit determines size.	Walk-in prefabricated cold room unit with stainless steel shelves.	Unit determines height.
Equipment storage	9.28	Shelving.	3 000

C.9 Animal Caretaker

Rooms for animal caretakers shall be provided in a transitional zone between the animal zone and the administrative areas so caretakers do not need to degown for convenience functions. Transitional areas include break rooms and gowning areas.

C.9.1 Break Rooms: Break rooms serve as interaction space for the animal facility staff. They shall be located in the vicinity of the administration and changing areas, have a comfortable atmosphere, and be equipped with chairs, tables, bookcases, counter, sink, microwave oven, refrigerator, vending machines, white board, tack board, lounge furniture, and space for time cards if required. Trash and recycling receptacles shall also be provided.

C.9.2 Gowning Areas: Locker, toilet, sinks, and showers shall be provided for gowning prior to entering animal holding areas and for degowning after leaving the animal holding areas. These rooms shall be equipped with individual, full-size lockers for staff. The locker must provide for the storage of clean facility scrubs and

facility-specific shoe storage. There should be a place to collect dirty laundry, plug in hair dryers, and hang clothing and items on shelving. Provide a mirror and excellent lighting. These spaces must be designed and constructed using moisture-resistant materials and wall-hung fixtures to allow for ease of cleaning.

C.9.3 Summary Space Schedule for Animal Caretaker Areas:

Table C.9.3 Summary Space Schedule for Animal Caretaker Areas

Space Name	Area (m^2)	Equipment/Furniture and Requirements	Ceiling Height (mm)
Break rooms	Building population, fixtures, and equipment determine size.	Vending machines, counters, tables with chairs, refrigerator, microwave oven, sink, white board, and lounge furniture.	2 400
Gowning areas with locker, toilet, and shower room	Fixtures and equipment determine size.	Water closet, urinal, shower, lavatories with mirrors, lockers, benches, and appropriate toilet accessories.	2 400

C.10 Offices and Miscellaneous Areas

C.10.1 Offices/File Rooms: Animal care is typically contracted out at the NIH. The contract supervisor must have at least one office within the animal housing zone or the public zone. In addition, offices are required for floor/team leaders, area supervisors, and trainers. Private offices shall be provided for the Government management staff and veterinarians. Open office space is provided for clerical and other administrative personnel. Appropriate provision shall be made for privacy. Ergonomic systems furniture shall be used in all administration spaces.

Space shall be provided for copying machines, fax machines, files, shelves, and other routine office equipment. In addition, space is required for central computer systems. This area does not have the stringent air change requirements that the animal holding areas have. File rooms should be located in the Animal Facility Office area. File rooms should be lockable.

C.10.2 Conference Rooms/Training Rooms: Conference rooms/training rooms shall be provided for formal and informal meetings of staff and for periodic training. Conference areas shall be utilized on a shared basis and be designed in accordance with National Fire Protection Association (NFPA) occupant loads. Conference rooms should be equipped to accommodate flexible seating arrangements. There should be

white boards, electrical connections for audiovisual equipment, a screen, and adjustable overhead lighting; data and telephone lines shall be provided.

C.10.3 Reception Area: In light of heightened security, the animal facility should have a central reception area where guests and vendors can be met and directed appropriately. The reception area should be located as close to the main entrance to the facility as possible. It should have a reception desk, chairs, and low tables.

C.10.4 Housekeeping Closets: The animal facility must be equipped with appropriately sized housekeeping closets located throughout the facility to adequately serve its needs. A housekeeping closet must be provided with both supply air and exhaust to reduce humidity and control odors. Closets should be fitted with wire bar shelving, mop and broom hangers, a mop sink, and adequate lighting. Closets should be sized to hold cleaning supplies and equipment only. The interior of the closet must be finished with materials and surfaces that are cleanable, moisture resistant, and durable.

C.10.5 Summary Space Schedule for Offices and Miscellaneous Areas:

Table C.10.5 Summary Space Schedule for Offices and Miscellaneous Areas

Space Name	Area per Person (m^2)	Equipment/Furniture and Requirements	Ceiling Height (mm)
Branch Chief	15.00	Work surfaces with binder bins, convergent work surfaces, lateral files, tack boards, and white boards.	2 400
Veterinarian	12.00	Work surfaces with binder bins, convergent work surfaces, lateral files, tack boards, and white boards.	2 400
Secretary	8.00	Counter/work surfaces with binder bins and lateral files.	2 400
Clerical	8.00	Work surfaces with binder bins and lateral files.	2 400
Conference	0.20	Conference table and chairs, A/V equipment, white boards, etc.	2 400
Building Engineer	10.00	Work surfaces with binder bins and lateral files.	2 400

Space Name	Area per Person (m^2)	Equipment/Furniture and Requirements	Ceiling Height (mm)
Shipping and Receiving	12.00	Work surfaces with binder bins and lateral files, shelves for clean linen.	2 400
Housekeeping Closets	Size closets on the basis of building program, configuration, and layout.	Mop sink and mop rack.	2 400

D. Design Criteria

All NIH animal facilities at a minimum shall be designed to meet the requirements of animal biosafety level (ABSL-2) containment requirements, unless noted otherwise. The following paragraphs describe the architectural and engineering design guidelines that are important in planning and designing an animal facility.

D.1 Space Requirements

The space requirements for animal facilities vary greatly. Requirements are dependent on the specific use of the facility, type and density of animals housed, type of caging and racking systems, number of investigators utilizing the facility, and operational methodologies of the facility. Each proposed facility will require careful analysis by the design team and consultation with users to determine adequate space requirements.

D.1.1 Space Planning Criteria: Criteria for animal housing space are set forth in *The Guide*. The space requirements for a facility should consider the total animal population, number of species, isolation requirements, number of animals per room, and number of investigators and research projects anticipated. The assignment of support space is based on protocol, equipment, and process and can be determined only on the basis of an evaluation of the specific project program of the facility users. Application of these space criteria requires the design team to analyze functional requirements in light of specific project needs.

D.2 Furniture and Equipment

D.2.1 Casework and Countertops: Cantilevered benchtops with rolling metal cabinets are preferred because they allow for ease of cleaning. Fixed casework and countertops shall be sealed to walls and floors during installation to minimize harborage of pests and provide a cleanable joint. Countertop materials will vary depending on usage. Traditional materials such as chemical-resistant plastic laminates may be appropriate for some applications. Epoxy resin will apply for most applications where corrosive chemicals are used or sinks or heavy water usage occurs. Other new materials should be investigated for cost-effectiveness and

durability. Stainless steel shall be used for glass-washing areas and other areas, depending on program requirements.

D.2.2 Chemical Fume Hoods and Biological Safety Cabinets: Chemical fume hoods are generally not required in an animal facility. However, there are certain types of animal research that may require the use of a fume hood. An example of this is the use of highly mutagenic chemicals to induce mutations in zebrafish. The determination to include a fume hood within the boundary of the animal facility should be made with the representative users of the facility. Consideration should be given to providing fume hoods in a small percentage of the procedure rooms. For detailed information on fume hoods, see General Design Guidelines, Mechanical.

Biosafety cabinets (BSCs) may be used in some animal holding rooms in lieu of a laminar flow changing station. BSCs may also be used in procedure/treatment rooms. The determination to include a BSC in either location should be made with the representative users of the facility. National Sanitation Foundation Standard 49 and NIH Division of Safety criteria and standard details regarding BSC design shall be used.

D.2.3 Equipment: The planning and design for equipment is a multidisciplinary task that should begin during the planning phases and be coordinated throughout design. The A/E shall plan the facility to accommodate current and anticipated equipment requirements. A wide variety of equipment is utilized throughout NIH animal facilities. For additional requirements for specific room functions, see Animal Research Facilities, Section: Space Descriptions. Washing and sterilizing equipment in animal facilities shall be steam powered. **Requirements will be program driven and verified with the users.**

D.2.4 Autoclaves: Space for autoclave capacity should be provided on the “dirty” side of the facility for decontamination of cages, waste materials, and other contaminated equipment. The autoclave provided may be double-door/pass-through. The doors should be interlocked to prevent the possibility of contamination of the “clean” side. Space should be provided for autoclave maintenance. Space should also be considered for “clean” autoclaves (for sterilization of microbiological media and clean instruments, etc.) when required by animal facility personnel.

D.3 Architectural Finishes and Materials

The animal facility shall be constructed of materials and finishes that are impervious and monolithic and resistant to cracking and damage to meet the demands of heavy cart traffic, frequent cleaning with the use of high-pressure, high-temperature water, abrasives, and caustic cleaners, including chlorine compounds. Finishes shall also be selected to contribute to the creation of a comfortable, productive, and safe work environment.

Finishes and construction details shall be well developed to provide a positive barrier against the harborage of pests and vermin. Structural joints should be detailed to be easily cleaned and decontaminated. The construction documents shall indicate the requirement for caulking and sealing all penetrations to close off harboring places for pests. All joints between dissimilar materials shall be accessible and easily cleanable or caulked to provide a sealed barrier. Selection of materials and penetrations through walls and floors shall be coordinated with the NIH Division of Safety. For additional requirements, see General Design Guidelines, Section: Fire Protection and Section: Pest Management, for requirements unique to an animal facility.

D.3.1 Floor Treatments: Floors should be smooth, durable, moisture-proof, non-absorbent, and slip-resistant and resistant to the adverse effects of disinfectants, high-temperature water, and detergent cleaning, as well as chemicals used in holding and procedure rooms and continuous movement of cages and equipment. If thresholds are used to separate dissimilar flooring materials, they should be of a type that permits the easy wheeling of cages or other equipment through the animal facility. All exposed concrete floors shall be sealed.

D.3.1.1 Moisture Protection and Waterproofing: All “wet” areas should receive a positive slope to the drain of 6 mm per 300 mm. Lesser slopes and flat areas are subject to ponding, which results in deterioration of the finish floor. Standing water can also pose a significant safety hazard and creates problems with sanitation. Floors should receive a waterproof membrane prior to the installation of the finish materials. The selection of the membrane system should be coordinated with the flooring manufacturer.

D.3.1.2 Resinous Epoxy Flooring Materials: Resinous epoxy flooring is recommended for all floors within animal facilities that are subject to abuse, frequent cleaning, and continuous movement of cages and equipment. Areas that are hosed

down shall be surfaced with resinous flooring materials. Flooring material should be carried up the walls a minimum of 150 mm to provide an integral covered base for ease of cleaning. A water vapor transmission test is required for all projects at the NIH prior to installing resinous epoxy flooring materials to any concrete substrate. For additional requirements, see General Design Guidelines, Section: Architectural. Resinous epoxy flooring shall conform to NIH Division 9 Specification Section "Resinous Flooring."

D.3.1.3 Sheet Vinyl: Some areas within the animal facility may not require the same amount of cleaning and disinfecting as the areas in which cages and animals are held or transported. These areas are program driven and may consider the use of a monolithic sheet vinyl flooring material. Flooring material should be carried up the walls a minimum of 150 mm to provide an integral covered base for ease of cleaning.

D.3.2 Wall Treatments: Walls shall be free from cracks, unsealed penetrations, or imperfect junctions with ceilings and floors. Walls shall be capable of withstanding the impact of cages, carts, and racks. Walls shall also provide a smooth, moisture-resistant surface. Many areas within an animal facility are subject to water daily, including impact damage from hose streams. Walls in these areas should be constructed of concrete block or surfaced with a heavy duty, impenetrable veneer.

D.3.2.1 Concrete Masonry Units (CMUs): If concrete masonry is selected for the wall finish material, it should be sealed with two coats of epoxy block filler before the application of epoxy finish coating systems. Failure to provide this surface preparation will result in a porous, pinhole-filled surface that is difficult to clean. All CMU joints shall be tooled flush to avoid the collection of dirt prior to the application of block filler. CMU walls shall be painted with at least two finish coats.

D.3.2.2 Gypsum Wallboard (GWB): High-density, water-resistant GWB is an appropriate wall material and should be evaluated on the basis of program and cost requirements. If GWB is selected as the wall material, bumper guards/rails shall be provided at multiple heights on all walls in corridors and animal holding rooms to prevent damage from cages, racks, and handcarts.

D.3.2.3 Ceramic Tile and Glazed Block: Ceramic tile and glazed block are not permitted because of the number of exposed joints, which increases both the possibility of failure and the opportunity for dirt to collect.

D.3.2.4 Fiberglass Reinforced Panels (FRPs): The use of FRPs in animal holding rooms should be considered when determining finishes for the animal facility. Issues such as durability, life-cycle cost, and maintenance are factors to be evaluated when comparing finishes.

D.3.2.5 Bumper/Wall Guards and Corner Guards: Extensive use of bumper/wall guards and corner guards is required throughout an animal facility regardless of the wall construction to minimize impact-related wall damage. Only solid materials that can withstand moisture and cleaning shall be specified. Hollow products should not be considered since the void cannot be cleaned and provides harborage for pests. Wall guards should be designed to protect door frames wherever possible by returning the ends into the frame. Guards should be provided in a high-low configuration in all corridors and cagewash areas to protect walls from damage by mobile equipment of various sizes. Stainless steel corner guards should be used at all external corners in corridors, animal rooms, and other spaces subject to impact damage. Wall and corner protection should be sealed to the mounting surface with proper sealant at time of installation.

D.3.3 Ceiling Treatments: All areas within the animal facility, except personnel support spaces, require ceilings that are smooth, free of crevices and imperfect junctions with walls, and capable of withstanding scrubbing with detergents, disinfectants, and water under pressure on a frequent basis. Surface-mounted lights and exposed pipes are not permitted.

D.3.3.1 Gypsum Wallboard: Most ceilings may be constructed of a suspended high-density, moisture-resistant GWB with an epoxy coating.

D.3.3.2 Suspended Plaster: The use of suspended plaster with an epoxy coating should be considered for areas subject to direct hosing or areas that are constantly wet.

D.3.3.3 Access Panels: Monolithic ceilings, such as suspended GWB or plaster systems, shall be provided with gasketed corrosion-resistant access panels. Panel doors shall also be fitted with a gasket. It is recommended that access panels be minimized in animal housing/holding and procedure rooms so as not to disrupt ongoing research and animal care activities.

D.3.4 Elevator Cabs: Finishes of elevators shall be cleanable and washable. The cab interior is to be totally stainless steel. The elevator cab floor material shall be the same as the floor in the animal facility. The cab interior shall have bumpers, sealed lighting, and sealed buttons.

D.3.5 Windows and Window Treatment: All exterior windows shall be non-operable. All interior windowsills shall be sloped, and all windows shall be caulked and sealed to ensure ease of cleaning and decontamination.

D.3.5.1 Window Treatments: Provide window treatments to meet all functional and aesthetic needs and standards. Light-tight treatments will be provided in all spaces that require room darkening based on program needs. If windows are provided in nonhuman primate areas, the room shall be capable of becoming light-tight. This can be accomplished through the use of adjustable shutters, blackout shades, or blackout panels. Integral devices within the window air space are preferred. No devices may be installed on the animal holding room side of windows or doors. These features are absolutely critical in being able to control the diurnal cycles for research purposes.

D.3.6 Doors and Door Frames: Doors should be sized to easily accommodate passage of cages, racks, and other large mobile equipment. Consider using automatic doors in high-traffic areas. To easily accommodate a variety of personnel and equipment needs, consideration should be given to using two-leaf doorways with differing leaf sizes. In this system, consider leaves sized at 1 100 mm and 765 mm. Where a single leaf is provided, minimum width shall be 1 100 mm. Minimum clear height shall be 2 200 mm high or as required for clear cage passage.

D.3.6.1 Material: Impact damage to doors is a major concern within animal facilities. Doors that are heavily used have a reduced life expectancy and require frequent repair and maintenance. Doors should be equipped with bumper rails. All doors should have kickplates. All doors within the animal facility that are not required to be fire rated, as well as all perimeter exterior doors into any building that houses animals, shall be fiberglass-reinforced polyester (FRP) doors. Doors shall conform to the NIH Division 8 Specification Section “Fiberglass Reinforced Polyester (FRP) Doors.”

Key salient features of the FRP doors and frames required for NIH animal facilities include:

- The entire core of the door, including the area within the stiles and rails, shall be completely filled with a minimum 80 kg/m^3 density, poured-in-place polyurethane (chlorofluorocarbon-free) with a minimum R-value of 11 to prevent the harborage of insects or vermin.
- Top and bottom rails shall be seamless and flush and constructed as an integral component of the door with no extrusions or capping permitted. Integral reglets to accept facesheets are required to present a flush appearance. Rail caps or other facesheet capture methods are not permitted.
- Door facesheets shall be a minimum of 3.05 mm thick and integrally colored and provide an abuse-resistant engineered surface.
- FRP facesheets shall be tested in accordance with ASTM E-84 and shall have the following Class A ratings: Smoke developed not greater than 310 and flame spread no greater than 15.
- All exposed joints and cracks that occur when two pieces of aluminum join or when aluminum and FRP and aluminum join shall be caulked with a clear silicone to prevent insects or vermin from gaining access to the inner portion of the door cavity.
- All glass (vision panels) and inset louvers shall be factory furnished and installed prior to shipment.
- All intersections between the door or frame surfaces and hardware items shall be caulked with a clear silicone sealant to prevent insects or vermin from gaining access to the inner portion of the door cavity.
- Door frames shall be fitted with solid rubber gasketing material. No bubble weather stripping shall be permitted.
- Premachine doors in accordance with templates from the specified hardware manufacturers and approved hardware schedule. Factory-installed hardware items should be in accordance with the manufacturer's specifications.
- All surface-mounted hardware shall be sealed around the perimeter of the item with a clear silicone sealant to prevent insects or vermin from gaining access to the inner portion of the door cavity.

D.3.6.2 Door Frames: Door frames shall be completely filled with grout or other inert material to prevent harboring of pests and sealed to surrounding construction.

D.3.6.3 Vision Panels: Vision panels should be provided in the active leaf of double doors and other doors as required by program requirements. Depending on program requirements, vision panels may require light-tight covers.

D.3.7 Door Hardware: Animal facility doors are considered high-use doors. All hardware shall be appropriately specified to withstand this type of use. Light, commercial-grade hardware shall not be specified. All appropriate hardware to meet security, accessibility, and life safety requirements shall be provided. Animal facility door hardware and keying shall comply with requirements outlined in the General Design Guidelines, Section: Architecture.

D.3.7.1 Door Pulls and Hinges for Interior FRP Doors: Specific door pulls shall be provided wherever FRP doors are specified within the interior of the animal facility. This recessed door pull features a "clean room design" with profiles and surfaces that are designed not to hold water from frequent washings. Each door leaf shall be equipped with a continuous, heavy-duty 14 gauge stainless steel hinge with a 6.35 mm stainless steel pin. **Geared hinges are not permitted.**

D.4 Structural

D.4.1 Vibration: An analysis of vibration response of the structure shall be made. Consideration shall be given to vibration of floor-framing systems caused by mechanical and electrical equipment such as pumps, chillers, fans, emergency generators, and transformers and other sources such as foot traffic, parking garage traffic, and movement of heavy equipment.

Many animals are extremely sensitive to vibration, which can produce detrimental effects on research. Designers shall take every opportunity to control vibration and to locate vibration sources away from animals and activities sensitive to vibration. Specific vibration recommendations shall be made by an experienced vibration consultant. Steel structures shall not be precluded for use in structural design relative to vibration without analysis.

To control vibration transmitted into the animal facility space, the A/E shall consider the following items during the early design phases:

- The structural system should be relatively stiff so that any transmitted vibration occurs at high frequencies. Vibrations occurring at higher frequencies are more

easily dampened with instrumentation vibration-dampening systems and isolation tables than vibrations occurring at lower frequencies.

- The structural system should have relatively short column spacing.
- Animal facility spaces should be located away from sources of vibration.
- Animal facilities should be located on grade-supported slabs. This not only reduces vibration concerns but also more easily accommodates pits required for cage and rack processing, and the risk of water leakage to lower levels is eliminated.
- On framed floors, corridors and animal facility spaces should not be combined in the same structural bay.

D.4.2 Module/Bay Size: The dimension of the structural bay, both vertical and horizontal, shall be carefully evaluated with respect to the functional requirements of animal facility spaces, the primary building module, mechanical distribution, and future expansion plans. The horizontal dimension of the structural bay shall be a multiple of the planning module or primary building module dimension for maximum flexibility and to allow uniform points of connection for animal facility services.

Columns shall not fall within the animal facility planning module or building module to prevent interference with animal facility space planning and cause inefficient use of animal facility space. Close coordination between structural and mechanical disciplines is critical to minimize interference of piping and ventilating systems with the structural framing.

D.4.3 Floor Slab Depressions: Floor depressions and/or topping slabs will be evaluated for use in special-finish areas, wet areas, or areas exposed to materials that may deteriorate the structural floor slab. Floor depressions shall be reviewed for equipment requirements to allow for ease of movement of equipment. Floor slabs shall slope to accommodate drainage, and pits shall be provided in cagewash areas. Suitable protection of the concrete and reinforcing shall be considered in high-temperature cagewash areas.

D.4.4 Equipment Pathway: The potential routing or pathway for the addition or relocation of heavy equipment shall be reviewed and identified during the design phase.

D.5 Heating, Ventilation, and Air Conditioning (HVAC)

HVAC systems shall meet the requirements published in the *Guide*. Temperature, humidity, and air change rate shall be carefully controlled and monitored on a continuous basis. Systems shall have adequate ventilation capacity to control fumes, odors, and airborne contaminants and offset the heat load of lab animals.

HVAC systems shall be both reliable and redundant and operate without interruption. HVAC systems shall be designed to maintain relative pressure differentials between spaces and shall be efficient to operate, both in terms of energy consumption and from a maintenance perspective. Federal Energy Standards, to the extent possible, shall be achieved. Studies shall be conducted during the design phase to determine the feasibility of utilizing heat-recovery systems in animal facility buildings.

Principal design guidelines include control of contamination, prevention of cross-contamination, temperature and humidity control, energy conservation, and reliable operation. Refer to General Design Guidelines, Section: Mechanical, for systems design, basis of design report, and energy conservation compliance requirements.

D.5.1 Outdoor Design Conditions for the NIH, Bethesda: For facilities whose purpose is animal research and for HVAC systems requiring 100 percent outside air, outdoor design conditions shall be as follows:

Table D.5.1.a Outdoor Design Conditions for the NIH, Bethesda (Facilities With 100 Percent Outside Air)

Season	Temperature (°C)	Wind (km/h)
Summer	35 dry bulb and 25.7 wet bulb	12
Winter	-11.6 dry bulb	10.8

Latitude, 39 N; daily temperature range, -8 °C.

For all other facilities such as office buildings, administrative facilities, and noncritical HVAC systems not requiring 100 percent outdoor air, the values recommended by the current American Society of Heating, Refrigerating and Air-Conditioning Engineers (ASHRAE) *Handbook of Fundamentals* shall conform to the following:

Table D.5.1.b Outdoor Design Conditions for the NIH, Bethesda (Facilities Not Requiring 100 Percent Outside Air)

Season	Outdoor Design Parameters
Summer	1% design, dry bulb 1% design, wet bulb
Winter	99% design, dry bulb

The design wet-bulb temperature for sizing cooling towers shall be 1° higher than the ASHRAE 1 percent outdoor design wet-bulb temperature. All outdoor air-cooled condensing equipment shall be designed and selected on the basis of a 41 °C ambient temperature.

D.5.2 Indoor Design Conditions: The following indoor design conditions shall be used in the design of the animal facilities. Animal holding areas shall be maintained at the design conditions at all times. Design conditions shall be satisfied under all load conditions among the various holding areas.

Table D.5.2 Indoor Design Conditions

Season	Temperature (°C)	Relative Humidity (%)
Summer	23 ± 1	50 ± 5
Winter	23 ± 1	40 ± 5

D.5.2.1 Animal Housing:

Table D.5.2.1 Animal Species Design Conditions

Animal	Temperature (°C)	Relative Humidity (%)
Mouse	18-26	40-70
Hamster	18-26	40-70
Guinea Pig	18-26	40-70
Rabbit*	16-22	40-70
Dog	18-29	30-70

Animal	Temperature (°C)	Relative Humidity (%)
Nonhuman primate	16 - 29	45-70
Chicken	16 - 27	45-70

*Special HVAC considerations for rabbits: Rabbits require lower temperatures than most other species. The ability to control temperature and maintain an appropriate humidity level is important for their breeding and well-being. The appropriate temperature range for rabbits is 16 to 20 °C.

Ideally, every animal holding room shall be capable of housing all species to be housed within the facility. The HVAC system shall also be capable of maintaining the full range of requirements for all anticipated animal populations. The temperature range required to accommodate most commonly used research animals is 18 to 29 °C controlled to ±2 °C. The ranges do not represent acceptable fluctuation ranges. The humidity shall be between 30 and 70 percent and normally controlled to 50 ± 5 percent. These ranges can be narrowed when the anticipated species have similar requirements.

Some laboratories within the animal facility conduct special research requiring unique temperature and humidity ranges and control. These special cases shall be evaluated and provided for on a case-by-case basis. The HVAC system shall be designed to accommodate these unique conditions as they occur.

D.5.3 Air Quality: HVAC systems for animal facilities shall be independent from other building HVAC systems. These systems shall maintain a safe and comfortable environment for animals, be adaptable, and be capable of maintaining environmental conditions in any of the holding rooms for any of the species anticipated to be housed in the facility. Since most animal studies are of long duration, they shall be performed under consistent conditions in order to achieve repeatable results. Thus, failure of the HVAC system is unacceptable. Central HVAC systems thus should be provided with multiple air-handling units and exhaust fans to provide redundancy and improve reliability.

Some rooms may be designated as “hooded rack” rooms having a housing chamber with sash fronts similar to a walk-in fume hood or individual air recycle systems of the laminar-flow type. Unit directional flow, laminar-flow systems for any of the rooms may also be required.

With regard to ventilation, the following objectives should be considered: the elimination of drafts that could adversely affect animal health; monitoring, maintaining, and recording consistent temperature and humidity conditions in individual rooms; and controlling the airborne animal hair and particulate count. The minimum ventilation rate for animal housing and treatment facilities shall be in accordance with ASHRAE *Applications Handbook*, Chapter 21, and the *Guide*. Recirculation of air in an animal facility is prohibited. The air conditioning flow rate for an animal room shall be determined on the basis of the following factors:

- Desired animal microenvironment
- Species of animal(s) and its (their) population(s)
- Required minimum ventilation rate
- Internal loads within animal room
- Recommended ambient temperature and humidity
- Heat gain by the animals

The A/E shall consider additional factors, such as the method of animal cage ventilation, operational use of a fume hood or a BSC during procedures involving animal cage cleaning and animal examinations, airborne contaminants, and institutional animal care standards, as applicable to animal facilities.

In addition to the prefiltration normally used, additional filtration is generally provided with efficiencies ranging from 95 to 99.99 percent (HEPA). This final filtration is to protect against particulate and other contaminants, which the air-handling equipment itself can generate. The A/E shall review the project's Program of Requirements to establish specific filtration criteria.

D.5.4 Air Distribution: Animal facilities shall be designed with special attention to air quality, acoustics, airflow quantities, diffusion characteristics, means of delivery, delivery temperature, air velocity, and air distribution.

- Distribution shall prevent cross-contamination between individual spaces, and air shall flow from areas of least to areas of higher contamination potential (i.e., from "clean" to "dirty" areas).
- Air supply terminals shall be located at ceiling level or close to ceiling level if located on sidewalls. Air distribution and diffusion devices shall be selected to minimize temperature differentials in the space. The maximum air velocities in the occupied zone shall not exceed 0.25 m/s at an elevation of 1.8 m.

- In the cagewash facility, the “dirty,” “clean,” and cagewash equipment, including associated mechanical supporting equipment areas, shall be physically separated from each other, including equipment pits. Canopy exhaust hoods shall be installed for heat-generating cagewash equipment in both the “dirty” and the “clean” sides of the facility.

D.5.5 Relative Pressurization: Animal facility spaces shall be protected against contamination from outside sources, including particulates brought in from the outside in the HVAC airstream. Generally, the animal facility shall remain at a negative air pressure relative to clean corridors and other non-animal facility spaces. Relative pressurization inside the animal facility is a series of complex relationships. Some of these relationships may change as research and animal populations change. The HVAC system shall be capable of maintaining these relative pressure relationships and capable of adapting as facility utilization changes.

“Clean” areas of the facility—including the “clean” side of cage and rack washing, the “clean” corridor system, and bedding dispensing, diet, and preparation areas—shall be positive relative to animal holding areas or “dirty” areas.

The relative pressure in animal housing areas is generally negative relative to “clean” areas and positive relative to service corridor and “dirty” areas.

“Dirty” areas such as the service corridor, the “dirty” side of the cage and rack washing area, and decontamination and waste holding areas shall be maintained at a negative pressure relative to the animal rooms.

Some areas have special pressurization requirements and shall be addressed individually. Animal holding areas for transgenic or immunosuppressed populations shall be maintained at a positive pressure and may require special filtration of supply air.

Potentially infectious populations shall be maintained at a negative pressure to prevent contagion from migrating to other populations. Depending on the nature of the infectious agents involved in the research, these areas may be required to meet the design criteria for biohazard containment facilities. To maintain these special conditions, anterooms or microisolator housing units may be required.

The pressure relationships for animal care areas—including treatment rooms, procedure rooms, necropsy rooms, and surgical areas—require investigation by the design team with the facility user to determine project-specific requirements. The HVAC system shall be adaptable so that pressure relationships can be modified as required over the life of the facility.

The "dirty" elevator shaft is to have air pressure negative to all surrounding areas.

D.5.6 Ventilation: The ventilation requirements for all animal holding and procedure areas at the NIH are discussed in detail in the General Design Guidelines, Section: Mechanical. Small-animal static cage/rack systems require a minimum of 15 air changes per hour, whereas ventilated cage rack systems require a minimum of 10 air changes per hour. On average, large-animal holding areas require a minimum of 15 air changes per hour.

Exhaust from animal rooms shall be discharged to the outside with no recirculation of air to other rooms. For protection of personnel and to minimize the potential for cross-contamination of animals, the direction of airflow shall be inward to the animal rooms at all times. Where protection of the animals from possible contamination is important, consideration should be given to providing ventilated airlocks for the animal rooms. The use of filtered isolation cages may also be considered. A/Es should consult with animal facility personnel with regard to the specific requirements for protection of animals.

D.5.7 Heating and Cooling Load Calculations: Complete design load calculations and a vapor drive study shall be prepared for each space within a design program and presented in a format similar to that outlined in the latest ASHRAE *Handbook of Fundamentals*. Heating and cooling load calculations are required for all projects to facilitate review and provide a reference for system modifications. Individual room calculations shall be generated and summarized on a system basis and presented with a block load to define the peak system load. Load summary sheets shall indicate individual rooms with area, design air quantity, L/s per m^2, air changes per hour, and corresponding return or exhaust air quantity. Calculations shall include but not be limited to indoor and outdoor design parameters, heat gains and heat losses, supply and exhaust requirements for central systems and for each area of the facility, humidification and dehumidification requirements, and heat recovery. As a

reference, calculations for assessing heating and cooling loads may include but are not limited to the elements in the following table:

Table D.5.7 Load Calculation Considerations

Sensible Heat Loads	
Windows, solar/conduction components	People, sensible
Partition, when next to unconditioned spaces	Animals, sensible
Auxiliary air requirement	Lights, room, and task
Walls, external, external chases	Internal equipment and personal computers
Roofs and skylights	Supply, return, and exhaust fan heat
Ceilings, when below unconditioned spaces	Infiltration
Floors, when above unconditioned spaces	Makeup and ventilation air requirements
Latent Heat Loads	
People, animals, internal equipment	Infiltration
Makeup and ventilation air requirements	Auxiliary air requirements

All heating and cooling load calculations shall include a predetermined safety factor to compensate for future flexibility, infiltration, and air leakage. Safety factors shall be clearly defined in the basis of design report.

D.5.8 Building Solar and Conduction Loads: The design engineer shall provide a thorough review of all building construction components to accurately calculate the resultant R-values and U-values for the various construction conditions. Calculations shall include a sketch of the construction conditions and include a written description of where the conditions exist. Component R-values used shall be referenced as to their source and where possible tied to project specification. R-values and U-values, shading coefficients, vapor transmission values, transmittance, doors, windows, and skylights shall be selected by the A/E and accurately defined in the project specification.

D.5.9 Lighting Loads: The HVAC system shall provide as a minimum capacity for the following heat loads generated by room and task lighting:

Table D.5.9 Lighting Loads

Space	Task Lighting (W per person)	Room Lighting (W/nm^2)	General Lighting (W/nm^2)
Animal holding areas	250	32	
Offices	250	32	
Corridors		11	11

D.5.10 Occupant Loads: One person per 100 nm^2 of animal facility space.

D.5.11 Animal Room Heat Loads: ASHRAE data concerning animal heat loads and NIH estimates concerning animal room occupancy shall be used for system design. The following chart illustrates the heat generated by some of the laboratory animal species:

Table D.5.11 Animal Heat Loads by Species

Species	Weight (g)	Heat Generation: Normally Active (W per animal)		
		Sensible Heat	Latent Heat	Total Heat
Mouse	21	0.33	0.16	0.49
Hamster	118	1.2	0.58	1.78
Rat	281	2.3	1.1	3.4
Guinea pig	409	3.0	1.5	4.5
Rabbit	2 456	11.5	5.7	17.2
Cat	3 000	13.4	6.6	20.0
Nonhuman primate	5 443	20.9	10.3	31.2
Dog	10 310	30.8	16.5	47.3

D.5.11.1 Animal Density: A typical 3 x 7 m animal holding module will have the following species density:

Table D.5.11.1 Animal Density by Species

Animal	Animals per Rack	Racks per Module	Animals per Module
Mouse	300	5	1 500
Rat	90	5	450
Guinea pig	40	5	200
Rabbit	8	5	40
Cat	8	5	40
Nonhuman primate	8	5	40

D.6 Plumbing

Types of plumbing systems in the animal facility may include wash systems, waste drainage systems, animal drinking water systems, and medical gas systems. Plumbing systems specifically installed for animal support require close review with an animal care specialist to determine the exact feature designs.

Guidelines for animal facility plumbing system design shall carefully minimize the potential for accumulating dirt and providing pest harborage and access to animal care areas and ensure that all pipes, mounting brackets, supports, and so forth are caulked and sealed during installation. Some general criteria that should apply include minimizing any exposed piping inside animal rooms, installing piping with standoff support to aid in proper cleaning, avoiding being carefully sealed, and evaluating pipe materials that do not use toxic-releasing compounds during manufacturing. Careful consideration shall be given to drainage facilities since waste lines frequently become clogged, and buried waste pipe should be one size larger than required for normal use.

D.6.1 Waste: Large quantities of liquid waste leave the animal facility through the sewer systems. As such, the system shall be adequately sized, particularly if it is recommended for animal rooms. Floor or trench drains with an automatic water system for maintenance should be considered in large-animal rooms. Most small-animal holding rooms do not require a drain or hose bib. A percentage of holding rooms in the facility may be designed with a drain to accommodate fish tanks, rodent swim tanks, or farm animals.

Disposal of solid waste in the form of bedding, paper, feces, animal carcasses, and other miscellaneous wastes shall also be carefully considered. Bedding can be disposed of by a mechanical slurry system contained in a cagewash. This procedure reduces labor and the volume of solid waste.

D.6.1.1 Floor Drains: Floor drains are not essential in all animal rooms. The A/E should review the need for floor drains with animal facility and safety personnel. Where necessary, floor drains shall be capable of being capped off and sealed when not in use.

D.6.2 Water Supply: Incoming mains will serve both domestic (potable) and industrial (nonpotable) water systems. Backflow preventers on the industrial water system will be used to protect the potable water system. Duplex water pumps should be used if required to maintain a minimum water pressure of 240 kPa at the highest outlet (fixture). A pressure-reducing valve should be provided if required to limit maximum water pressure at 450 kPa. All animal facility water fittings shall be equipped with vacuum breakers in accordance with General Design Guidelines, Section: Plumbing.

D.6.2.1 Potable Water: Potable water will be connected to all non-animal research plumbing fixtures, emergency showers, and eye washers. Potable hot water will be recirculated. The required temperature for potable hot water shall be 26.3 °C.

D.6.2.2 Industrial Cold and Hot Water: Industrial water serving process equipment and laboratory space in the animal facility shall be isolated from the potable water supply. Industrial water fed from the incoming domestic supply shall be separated through a backflow preventer. The industrial hot water system may be generated with heat exchangers and be recirculated. The required temperature for industrial hot water shall be in accordance with General Design Guidelines, Section: Plumbing.

D.6.2.3 Animal Watering System: The designer should investigate the animal watering requirements for the facility. The animal watering system shall be separated from the domestic water supply with a backflow preventer. The quality of water to be utilized in the animal watering system shall be determined by the users and animal care staff. The type and quality of the water depend on the type of animal population, the type of research being conducted, and the quality of the domestic water supply. The domestic water supply may be adequate for many types of animals and research. However, in other applications, treated water may be required. Treatment

may include reverse osmosis (RO), deionization, or chemical injection. Specific requirements for the zoning, number of water connections per room, control, injection capability, and flushing shall be verified by the users. When automated watering systems are used, a manifold for flushing hoses is required in the cage and rack-washing area.

Many NIH animal facilities use a combination of bottle and automatic watering systems. Accommodation for automatic watering at a future time or in a portion of the facility should be considered. The designer should also investigate the applicability of specialized water processing for the facility (i.e., RO, ultraviolet [UV] sterilized, chlorination, acidification, etc.). In addition, the impact of specialized water on the proposed bottle fillers, proportioners, and distribution piping shall be considered.

D.6.2.4 Special Plumbing Considerations for Aquatics: Slight variations in water salinity or pH can kill the animals. Piping should be of an inert material. Metal piping, especially copper and zinc piping, should be avoided since it leaches chemicals that are toxic to most aquatic species. Floor drains should be designed to minimize the retention of organic matter (no recesses, inaccessible lips, etc.) and be easily accessible for cleaning and pest management inspection.

If a saline environment is required, the equipment shall include a supply-mixing tank upstream from the holding tanks. In a saline environment, all materials shall be corrosion resistant.

D.6.3 Medical Gas for Animal Procedures: Medical gas systems for animal procedures may consist of a cylinder supply system without reserve supply or bulk supply without reserve supply. Systems will consist of a primary source and a secondary supply that will operate automatically to supply the pipeline as the primary source becomes exhausted. The secondary supply will consist of at least 3 days' average supply unless the local resupply situation dictates a greater secondary supply amount. An alarm panel to monitor line pressures and the status of supply equipment shall be provided. Monitoring shall be done via pressures and switches and contacts located downstream of the manifold. All systems will comply with the latest edition of NFPA 50, 56F, and 99. The following medical gases will be provided for the appropriate functional areas:

Table D.6.3 Medical Gas Terminals for Animal Procedures

Functional Area	Gas
Exam/treatment	Oxygen, medical vacuum, and medical air
Prep/holding	Oxygen, medical vacuum, and medical air
Surgery	Oxygen, medical vacuum, medical air, nitrous oxide, and nitrogen
Necropsy	Oxygen and processed air

D.7 Electrical

D.7.1 Normal Power: The following load figures in watts per square meter (W/m^2) shall be used in sizing the overall building service. These figures are connected load and should be used in the early design stages. Actual design loads shall be used in the later part of the design. The range provided allows for varying intensity of usage. The mechanical loads do not include chilled water or steam generation, which are produced centrally on the NIH campus. The A/E shall use sound judgment in applying these numbers.

Table D.7.1 Normal Power Load Figures

Load	W/m^2
Lighting	27-38
Receptacles	22-43
HVAC	97-108
Lab equipment	43-86
Elevators	11-16
Miscellaneous	11-22
Total range	211-313

Conduits in animal facilities shall be concealed. Surface-mounted conduits in washdown areas shall be intermediate metallic conduit (IMC) or rigid galvanized steel with threaded couplings. Conduits in animal facility areas shall be sealed with conduit sealer such as Duxseal at each device/junction box. Surface metal boxes shall be cast metal. Conduits entering or leaving device boxes, junction boxes, pull

boxes, and so forth shall be sealed at each box with a non-hardening sealant such as Duxseal. An alternative is to use seal-off fittings in conduits penetrating animal facility walls. A potting compound shall be poured into the fitting after the wires are installed. **Surface metal raceway with snap-on covers shall not be used in an animal facility because of the requirements for washdown cleaning.**

Operating rooms associated with animal facilities shall have isolated power panels with ungrounded secondary and line isolation monitors. Branch circuits in operating rooms shall have type XHHW insulation and #10 AWG ground conductors. Isolated power branch circuits shall have conductors with orange and brown XHHW insulation to reduce leakage current.

D.7.2 Emergency Power: The following load figures in watts per square meter (W/m^2) shall be used in sizing the generator. These figures are connected load and should be used in the early design stages. Actual design loads shall be used in the later part of the design. The range provided is to allow for varying intensity of usage. The A/E shall use sound judgment in applying these numbers.

Table D.7.2 Emergency Power Load Figures

Load	W/m^2
Lighting	1-5
Receptacles	1-2
HVAC*	1-32
Lab equipment	20-43
Elevators**	2-2
Total range	25-84

*Supply and exhaust fans for animal holding
**Minimum: one elevator per bank of elevators

The following loads are required to be connected to emergency power. These loads are in addition to any emergency loads that are required by code:

- Operating room
- Animal ventilation fans
- Ventilated animal cages and cage systems

- CCTV cameras and equipment, security system
- Switch-controlled minimal lighting in animal holding rooms

D.7.3 Lighting: The lighting levels listed below in lux shall be used for design purposes. The values listed are average maintained footcandle levels using a total maintenance factor of 75 percent. The numbers listed are target values and shall be adjusted to meet the research requirements.

Table D.7.3 Lighting Levels

Function/Space	Lighting Levels (lux)
Animal facilities	270-800 variable through dimming
Offices	525-800
Corridors	325-525
Stairwells	200-325
General storage	200-325
Mechanical/electrical room	325-525

Areas not identified above shall use the Illuminating Engineering Society of North America (IESNA) *Lighting Handbook* for recommended values. Lighting in animal facilities shall be dimmable and shall have time-of-day automatic control where required for controlled environment studies. **Industrial fluorescent lighting fixtures shall have a wire guard or plastic sleeves over the lamps.**

D.7.3.1 Lighting Controls: All small-animal holding rooms should have individual light controls and light timers. Ideally, holding rooms should have individual temperature and humidity control as well.

D.7.3.1.1 Isolation Cubicle Lighting: Isolation cubicle lighting should be connected to the central lighting control system. Access to a manual override shall be restricted through the use of a key or card-key system.

D.7.4 Security: Animal facilities require strict access control. A card system exists on campus for building access. The Division of Security Operations (DSO) shall be notified during the early stage of design for card access approval.

D.7.5 Communications: Some racking systems are now designed with dynamic LAN line connections. Consideration shall be given to the requirement of LAN connections within the animal holding room.

D.8 General Health and Safety

Additional general health and safety regulations, codes, and standards that are required references for this section of NIH Design Policy and Guidelines are located in the Appendix.

The NIH, through the Division of Safety, has developed a comprehensive Occupational Safety and Health program to protect the safety and health of all employees on the campus. This includes the occupational work setting found in laboratories, clinical settings, animal-handling activities, and mechanical support services.

Safety and health regulations and guidelines require the use of engineering controls for worker protection, wherever possible, to minimize the potential for occupational exposure to hazards in the workplace. To be most effective, engineering controls for protecting occupational safety and health shall be designed into facilities for both new construction and renovated space. This proactive approach can minimize numerous common potential health and safety concerns in animal facilities. These health and safety guidelines are to be incorporated, as appropriate, in facility-specific construction documents by the A/E to ensure that health and safety protection is engineered into the design of any new or renovated facility.

While many of the requirements for health and safety engineering are incorporated in these Guidelines, it is impossible to cover all possible concerns. The A/E firm should, whenever possible, have a health and safety specialist on staff and shall always consult with Division of Safety personnel with regard to specific health and safety engineering requirements in the design of new construction and renovation projects.

D.8.1 Physical Hazards: Animal holding areas shall be designed with employee movement requirements in mind. Specifications for animal facility equipment should include a requirement that, whenever possible, sharp edges and other protuberances that may cause injury to either personnel or animals should be avoided. The location, height, weight, and ergonomic problems of wall-mounted cages shall be considered in the design in order to minimize employee hazards associated with lifting and removing these large objects.

Because of the frequent washing/wetting down of surfaces, floor areas should be slightly sloped to the drain to reduce pooling of water and the probability of slips and falls. Because of the potential for wet environmental surfaces in the animal facility, all electrical systems and apparatus shall be connected to a ground fault circuit interrupter (GFCI) to prevent electrical shock in accordance with 29 CFR 1910, Subpart S, requirements. See General Design Guidelines, Section: Electrical, for the discussion on shunt trip breakers and GFCIs.

D.8.2 Emergency Safety Equipment: Where potentially hazardous chemicals and cleaners are in use (e.g., cagewashing areas, etc.), eyewash stations and safety showers are required. Eyewash stations should be available within 22 m of the site of chemical usage. In addition, any room equipped with a chemical fume hood shall have an eyewash station and safety shower. See General Design Guidelines, Section: Plumbing, for requirements.

D.8.3 Gas Cylinders: Where appropriate, gas cylinders should be placed outside the animal area, with piping and wall valves to access the gas(es). Therefore, an area to place, secure, access, and remove the cylinders shall be provided. Anesthesia gases for surgical purposes may be required at the site of use. The A/E should consult with animal facility personnel to determine the preference of the user.

D.8.4 Waste Storage: The waste storage area shall be located on the “dirty” side of the facility. This area shall be sufficiently large for the storage of waste materials generated in the facility. This location should be near exit doors and should provide sufficient room to facilitate movement of waste containers/carts in a safe manner, with minimal ergonomic stress. The waste storage area shall be caulked and sealed to minimize pest harborage and promote proper cleaning.

D.8.5 Cagewashers: The cagewash facility shall be designed to minimize the noise produced from the equipment and operation carried out in the area. Noise emission at any one location should be less than 85 dB. New cagewashers’ operating noise emissions should not exceed 85 dB. Cagewashers shall have an integral acid neutralizing tank to neutralize acid used during the purge cycle.

D.9 Biosafety

Additional biological safety regulations, codes, and standards that are required references for biosafety design are located in the Appendix.

Major biosafety concerns for animal facilities include ventilation for animal welfare, sanitation, and containment of animal dander and odors and infectious agents. “Clean”/”dirty” corridor designs are recommended with directional airflow and minimal pressure differentials from “clean” to “dirty” areas.

D.9.1 Biosafety Level 3 Facilities: ABSL-3 animal facilities shall be designed for the containment of indigenous or exotic agents, which have potential for respiratory transmission, may cause serious and potentially lethal infections in personnel, and can be spread to the community through release to the environment. The following requirements shall be met in the design of ABSL-3 containment facilities.

D.9.1.1 Restricted Access: ABSL-3 animal facilities shall be separated from other animal facilities and work areas by passage through two sets of “self-closing” doors. A ventilated airlock shall be designed to separate the common corridor(s) from the ABSL-3 containment animal facility.

The purpose of a ABSL-3 animal facility is to ensure containment of agents used in the facility. It is recommended that airlock doors be interlocked to prevent simultaneous opening of doors between the outside corridor and containment areas. Interlocks, when present, should be provided with a manual override for use in case of emergency. Final determination on the design of airlocks for these facilities should be made in consultation with safety personnel.

D.9.1.2 Windows: Animal facilities should be designed without windows. However, windows, where present, shall be designed not to open. All windowsills shall be slanted, and seams around windows shall be sealed as with other seams in the laboratory to ensure ease of cleaning and decontamination.

D.9.1.3 Interior Surfaces: Interior surfaces of walls, floors, and ceilings shall be water resistant (i.e., epoxy paint, caulking, etc.), gas tight, and easily cleanable.

D.9.1.4 Integrity of ABSL-3 Space: All electrical and plumbing conduits and supply and exhaust ducts shall be sealed at the point of penetration into the facility to ensure containment and the capability for gas decontamination. All penetrations in walls, floors, and ceilings shall be sealed (with a smooth finish) to facilitate decontamination and cleaning. All joints between fixed cabinetry (e.g., shelves, cabinets, plumbing fixtures, etc.) and the floor or wall shall be smooth-coved and sealed to ensure maximum cleanability.

In all new construction, all access to critical mechanical equipment (e.g., ventilation ducts, fans, piping, etc.) shall be provided outside the containment facility. No compromise of the integrity of the containment of the ABSL-3 animal facility is allowed.

When retrofitting existing ABSL-2 animal space to ABSL-3 containment, it may not be possible to keep access to critical mechanical equipment outside the space. In these cases, an access panel shall be supplied inside the laboratory to allow access to such mechanical equipment. The access panel shall be hinged with a piano-type hinge and gasketed with gas-tight gaskets to ensure an appropriate seal for both containment and decontamination procedures.

D.9.1.5 Hand-Washing Sinks: A sink for hand washing shall be located near the exit door of each ABSL-3 suite and not in the airlock. Sink faucets shall be foot, elbow, or automatically operated.

D.9.1.6 HVAC/Exhaust: Ventilation shall be single-pass air, and all ABSL-3 space shall be kept negative with respect to outside corridors and laboratories. Exhaust ducts shall be under negative pressure until discharged outside the building or passed through a HEPA filter. While HEPA filtration of room exhaust from ABSL-3 animal facilities is not always necessary, an evaluation of the need for specific filtration should be performed during the initial planning and design stages of the project. User groups and personnel of the NIH Division of Safety shall be consulted. Safety personnel will determine the need for such filtration.

The exhaust from an autoclave contains a significant amount of moisture. Filtration of this exhaust, when necessary, shall be through a moisture-resistant (hydrophobic) filter such as a Pall 0.2 micron filter or the equivalent.

D.9.1.7 Vacuum Systems: Vacuum systems in ABSL-3 animal facilities shall be protected by filtration. See requirements in General Design Guidelines, Section: Plumbing, Vacuum Systems.

D.9.1.8 Alarms: ABSL-3 facilities shall be alarmed to indicate a failure to maintain a negative pressure differential from a noncontaminated area to potentially contaminated areas. Both visual (gauges) and audible alarms are necessary. **All alarm systems shall be validated prior to occupancy of the containment space by research personnel.**

D.9.1.9 Biological Safety Cabinets/Containment Equipment: Appropriate biological safety cabinets and other containment equipment shall be provided as necessary for the work to be performed. The determination of appropriate equipment needs should be made in consultation with user groups and NIH Division of Safety personnel during the design phase of the project.

D.9.1.10 Autoclaves: An autoclave for decontamination of waste from the ABSL-3 animal rooms shall be available in the facility, preferably within the ABSL-3 suite. See paragraph D.2.4 for planning requirements for an autoclave.

D.10 Radiation Safety

Additional radiation safety regulations, codes, and standards that are required references for radiation safety design are located in the Appendix.

Work performed at the NIH animal facilities involves the potential for occupational exposure to radioactive materials and other sources of ionizing and non-ionizing radiation. Although the procedures identified as good radiation safety (health physics) practices and techniques are essential to minimize potential exposure to radiation, the security, containment, and shielding of this material and equipment through the use of good facility design are extremely important elements. In addition to the protection of occupationally exposed workers, the NIH Division of Safety, Radiation Safety Branch, must ensure that the general public and surrounding environs are also provided with an adequate and similar degree of protection.

The intent of this section is to provide the A/Es with a working knowledge of the facility design parameters required for the construction of facilities, which shall provide for the control and containment of radiation hazards.

Not all sources of ionizing radiation are covered by Nuclear Regulatory Commission (NRC) licensing. These nonlicensed sources are, however, controlled by regulations issued by the NIH Radiation Safety Committee upon recommendation by the Radiation Safety Officer. Nonlicensed sources include x-ray machines, high-voltage accelerators, electron microscopes, and radioactive materials from sources other than reactor by-products.

D.10.1 Background: The NIH *Radiation Safety Guide* provides guidance and technical information concerning the use of radioactive materials as well as policies and procedures for radiation-producing machines and areas. Radiation safety control, containment, and shielding design and animal facility practices have been developed to minimize the potential for radiation exposure to workers as well as radiation release to the environment.

D.11 Animal Facility Fire Protection

This fire protection section includes specific requirements for animal facilities. The general fire protection requirements are found in General Design Guidelines, Section: Fire Protection.

D.11.1 Fire Suppression: In areas with washdown ceilings, provide gasketed concealed heads. In areas that also have a pressure differential at the ceiling, which can affect the operation characteristics of the concealed heads, the gasketed concealed heads shall be specifically listed for use in ceilings with pressure differentials.

D.11.2 Fire Alarm: A fire alarm voice communication system shall be provided in the animal holding/procedure areas. Upon an alarm, the fire alarm speakers are to sound a “slop whoop” signal, at 90 to 110 dB, for one cycle (4.1 seconds), followed by a repeated voice evacuation message. The voice message shall continue until the fire alarm control panel is reset or the “alarm silence” switch is activated. See General Design Guidelines, Section: Fire Protection, for additional fire alarm requirements.

D.12 Animal Facility Pest Management

For general design considerations related to pest management, see General Design Guidelines, Section: Pest Management. Consideration of pest management shall be

given to any function, finish, or detail contributing to pest infestation and harborage in or around the building. Design features shall promote cleaning and maintenance while minimizing pest ingress and harborage. Floor penetrations and void areas shall be minimized and completely sealed. The A/E shall ensure that areas of pest ingress such as doors, windows, loading docks, and so on are fitted with appropriate pest-exclusion devices. Consideration shall be given to designs that minimize pest harborage and promote proper cleaning. Examples of harborages are inaccessible voids behind and under equipment and casework, unsealed cracks or joints between pieces of equipment or finish materials, or the use of unsealed foam or fiberglass insulation on pipes and equipment. The NIH Division of Safety, Integrated Pest Management Unit, shall be consulted to review and approve all plans for new construction or renovation of old space and to obtain additional program-specific caulking and sealing information.

NIH Design Policy and Guidelines

General Design Guidelines

Office of Research Facilities

A. Universal Design and Accessibility for the Disabled

A.1 Universal Design

The concept of universal design is philosophical and embodies the principle that all environments and products be designed to be usable by people of all ages and abilities, to the greatest extent possible, without adaptation or specialized design. Universal design includes several principles, of which accessibility for individuals with disabilities is one component. An example of a universal design feature would be to site and grade the building so that neither stairs nor ramps are necessary at entrances and exits.

Providing universal design features in a building does not necessarily mean that you have complied with the legal and regulatory accessibility criteria contained in the Uniform Federal Accessibility Standards (UFAS) and the Americans with Disabilities Act Accessibility Guidelines (ADAAG). These ideas must not be used interchangeably.

Universal design principles should be applied to the planning and design of all NIH projects to the greatest extent practicable.

A good resource on this topic is The Center for Universal Design, which is a national research, information, and technical assistance center that evaluates, develops, and promotes universal design in public and commercial facilities, and related products. The Center has an extensive publications list including material on many aspects of universal design, including accessibility as well as slide shows and videotapes to supplement print resources.

A.2 General Accessibility Guidelines for Individuals with Disabilities

Providing NIH facilities that are accessible to individuals with disabilities is as critical a project goal as providing facilities that respond to scientific program needs or provide ease of maintenance, energy efficiency, or a pleasing aesthetic. The design team should place the same importance on designing for accessibility during the

entire design process as for all other project elements. Accessibility features should be seamlessly incorporated into the design beginning with the early planning stages and not be developed as an afterthought when compromises often result.

A.2.1 Applicable Legislation: The Architectural Barriers Act (ABA) of 1968 required the U.S. Department of Defense, U.S. Department of Housing and Urban Development, U.S. Postal Service, and General Services Administration (GSA) to prescribe standards for the design, construction, and alteration of facilities to ensure that all facilities are readily accessible to individuals with physical disabilities.

Section 504 of the Rehabilitation Act of 1973 requires program access and reasonable accommodations for individuals with disabilities and is closer in spirit to the Americans with Disabilities Act (ADA), which is a civil rights law. The GSA prescribes standards for all buildings subject to the Architectural Barriers Act that are not covered by standards issued by the other three standard-setting agencies. GSA is the standard-setting agency for the NIH.

Congress established the Architectural and Transportation Barriers Compliance Board (the Access Board) under the Rehabilitation Act of 1973 to set minimum guidelines and requirements for uniform Federal standards and to ensure compliance with the standards set by the four standard-setting agencies. The Access Board Guidelines were implemented under 36 CFR Part 1190 and resulted in publication of the *Uniform Federal Accessibility Standards* (UFAS), Federal Standard 795. UFAS is enforceable by the standard-setting agencies and the Access Board.

A.2.2 Revision of ABA and ADA Accessibility Guidelines: The Access Board's guidelines issued under the ADA and the ABA are in the process of being completely updated and revised. The *ADA Accessibility Guidelines* (ADAAG) cover the construction and alteration of facilities in the private sector (places of public accommodation and commercial facilities) and the public sector (State and local government facilities). The accessibility guidelines issued under the ABA primarily address facilities in the Federal sector and others designed, built, altered, or leased with Federal funds. The guidelines under both laws are being updated together in one rule that contains three parts: a scoping document for ADA facilities, a scoping document for ABA facilities, and a common set of technical criteria that the scoping sections will reference. As a result, the requirements for both ADA and ABA facilities will be made more consistent.

The Board is reviewing and analyzing the comments received during the public hearing and comment period. After the guidelines are republished in a final rule, other Federal departments responsible for the standards to enforce the ADA and ABA must then develop their standards so that they are consistent with the updated guidelines. Until then, the current standards remain in effect.

A.2.3 Requirements for Making NIH Facilities Accessible: The UFAS is mandatory on all NIH projects. Current GSA policy has been adopted to also encourage compliance with the requirements of the ADAAG where those requirements are more stringent than UFAS.

The criteria in these standards are considered a *minimum* in providing access to persons with disabilities. Where dimensions for clearances are stated, allowance must be made in design for construction tolerances to ensure that the completed construction is in full compliance. Compliance demonstration is mandatory.

It is NIH policy to make all facilities, buildings, and grounds accessible to individuals with disabilities without the use of special facilities for the disabled. The intent of this policy is to use standard building products, set at prescribed heights and with prescribed maneuvering clearances, to allow easy use by individuals with disabilities.

A.2.3.1 Leased Buildings and Facilities: Facilities, buildings, and grounds, or portions thereof, that are leased by the NIH or by the Federal Government for the use of the NIH, shall be accessible to individuals with disabilities under the same standards as NIH-owned facilities.

A.2.3.2 Historic Structures: Special accessibility requirements may be applied to "qualified" historic buildings and facilities. "Qualified" buildings or facilities are those buildings or facilities that are eligible for listing on the National Register of Historic Places. Accessibility provisions defined in the UFAS and ADAAG should be applied to historic facilities to the maximum practical extent. In cases where accessibility modifications would damage the significant historic features, a review by the NIH Federal Preservation Officer shall be requested to determine whether a change to the building as described in the accessibility standards would have an adverse affect on historic property. If the NIH Federal Preservation Officer determines that the undertaking will have an adverse effect on historic property, the NIH Federal Preservation Officer will consult with the State Historic Preservation Officer (SHPO) in accordance with 36 CFR 800 Section 106. Nevertheless, historic buildings are

covered by the Architectural Barriers Act and must adhere to the provisions of UFAS when renovations are undertaken.

Should the undertaking deviate from UFAS a trilateral Memorandum of Agreement (MOA) must be executed between the NIH, GSA, and SHPO. The NIH Federal Preservation Officer and the NIH Associate Director for Research Facilities will execute the MOA on behalf of the NIH, and the Commissioner of GSA will execute the MOA for GSA. A fully executed MOA must be obtained prior to the A/E implementing the special application provisions outlined in the UFAS in the NIH project design.

A.3 Application of the More Stringent of UFAS or ADAAG

The following information is provided to assist designers in determining where UFAS is more stringent or contains different requirements than the ADAAG. **Bold type** designates which standard shall be applied to the NIH design project.

Both the UFAS and the ADAAG references used for this comparison were current as of the date of the NIH Design Manual. The A/E should check all updates to the respective requirements before proceeding with the design.

The following two conditions apply:

- Those elements where UFAS provisions are clearly more stringent than ADAAG.
- Those elements where differences are "de minimis," or where provisions result in an equivalent level of access, do not significantly impact accessibility, or are outdated and no longer serve the intended purpose. In these cases, the NIH has the option to choose between the relevant options. Direction will be provided by the NIH Project Officer.

A.3.1 Where UFAS Is Clearly More Stringent

A.3.1.1 No Elevator Exemption: UFAS has no exception to the elevator requirement and requires elevators in all multi-story buildings and facilities. ADAAG provides an exception to the elevator requirement in certain buildings that are under three stories or have less than 279 m^2 (3 000 square feet) per story. [**UFAS 4.1.2(5);** ADAAG 4.1.3(5) Exception 1]

A.3.1.2 Entrances in Multi-Grade Buildings: UFAS requires at least one principal entrance at each grade floor level to a building to be accessible. ADAAG requires (1) that at least 50 percent of all public entrances be accessible and (2) that the number of exits required by the applicable building/fire code be used in determining the total number of accessible entrances required in a building or facility. UFAS would require more accessible entrances in certain "multi-grade" buildings. [**UFAS 4.1.2(8);** ADAAG 4.1.3(8)]

A.3.1.3 Work Surface Scoping: UFAS requires that 5 percent of all fixed or built-in employee work surfaces be accessible. ADAAG does not require work surfaces in work areas to be accessible. Both UFAS and ADAAG require that 5 percent of fixed tables in public and common use areas be accessible. [**UFAS 4.1.2(17)** and **4.32;** ADAAG 4.1.1(3) and 4.1.3(18)]

A.3.1.4 Work Areas: UFAS requires that all areas that may result in the employment of physically disabled persons be accessible. ADAAG requires only that people with disabilities be able to approach, enter, and exit a work area. [**UFAS 4.1.4**; ADAAG 4.1.1(3)]

A.3.1.5 Vertical Clearance at Van Parking Spaces: UFAS requires that the vertical clearance at accessible van spaces should be 2 895 mm (114 inches). ADAAG requires that the vertical clearance at accessible van parking spaces be 2 490 mm (98 inches). [**UFAS 4.6.6**; ADAAG 4.6.5]

A.3.1.6 Elevator Controls: UFAS requires elevator controls to be mounted no higher than 1 220 mm (48 inches) "unless there is a substantial increase in cost," in which case the maximum mounting height may be increased to 1 400 mm (54 inches). ADAAG allows 1 400 mm (54 inches) whenever a parallel approach is provided. [**UFAS 4.10.12(3)**; ADAAG 4.10.12(3)]

A.3.2 Where UFAS/ADAAG Differences Are "De Minimis"

A.3.2.1 Entrance Signage: UFAS always requires the International Symbol of Accessibility (ISA) at accessible entrances. ADAAG requires the ISA at accessible entrances only when there are inaccessible building entrances in the facility. If all entrances are accessible, the ISA is not required by ADAAG. [**UFAS 4.1.1(7)**; ADAAG 4.1.2(7)]

A.3.2.2 Stairs Exception: UFAS exempts stairs from complying with Section 4.9 only if an elevator connects the same levels the stairs do. ADAAG exempts stairs from Section 4.9 when there is any accessible means of vertical access connecting the same levels that are connected by the stairs. [**UFAS 4.1.2(4)**; ADAAG 4.1.3(4)]

A.3.2.3 Handrail Height: UFAS requires that handrails at stairs and ramps be placed with the gripping surface between 800 mm and 900 mm (30 and 34 inches) above the surface of the stair or ramp. ADAAG requires that such gripping surface be placed between 900 mm and 1 000 mm (34 and 38 inches). [**UFAS 4.8.5(5)** and 4.9.4(5); ADAAG 4.8.5(5) and 4.9.4(5)]

A.3.2.4 Tactile Warnings: UFAS requires that doors to hazardous areas be equipped with tactile warnings. This provision is reserved in ADAAG. [**UFAS 4.1.2(14)**, **4.13.9**, **4.29.3**, and **4.29.7**; ADAAG 4.29.3]

A.3.2.5 Pictograms: UFAS requires pictogram symbols to be tactile and does not permit simple serif characters. ADAAG does not require pictograms (pictorial symbol signs) to be raised and does allow the use of simple serif and sans serif tactile characters. UFAS allows only sans serif characters. [**UFAS 4.30.4**; ADAAG 4.30.4]

A.3.3 Special Occupancies

A.3.3.1 Assembly Areas. Scoping for 101 or More Fixed Seats: UFAS requires a greater number of wheelchair locations than ADAAG in larger assembly areas where the number of fixed seats exceeds 101. [**UFAS 4.1.2(18)**; ADAAG 4.1.3(19)(a)]

A.3.3.1.1 Dispersion for 300 or Fewer Fixed Seats: UFAS requires that wheelchair spaces be dispersed throughout the seating area, regardless of seating capacity. ADAAG requires that wheelchair spaces be provided in more than one location when seating capacity exceeds 300. [**UFAS 4.33.3**; ADAAG 4.33.3]

A.3.3.2 Transient Lodging. Scoping: UFAS requires 5 percent of transient lodging facilities to be accessible to persons with mobility impairments that, in very large facilities, would result in a higher number of accessible units than ADAAG would require. As required by the ADA, ADAAG provides for an exception for facilities with five or fewer units that contain the residence of the proprietor. UFAS does not provide for such an exception. [**UFAS 4.1.4(11)**; ADAAG 9.1.1 Exception 9.1.2]

A.3.3.2.1 Scoping and Technical Provisions: UFAS has scoping and technical provisions for housing. Section 13 Housing of ADAAG interim final rule has not been adopted as a standard by the U.S. Department of Justice. The Board is considering reserving Section 13 in its entirety when the final guidelines for State and local government facilities is issued. [**UFAS 4.1.1(5)(d)**, **4.1.4(11)**, **4.34**; ADAAG – proposes to reserve housing]

A.3.3.3 Restaurants and Cafeterias

A.3.3.3.1 Table Aisles: UFAS requires that there be access aisles between tables in restaurants and cafeterias that comply with 4.3 Accessible Routes. ADAAG requires that all accessible fixed tables shall be accessible by means of an access aisle of at least 900 mm (36 inches) clear between parallel edges of tables or between a wall and the table edges. [**UFAS 5.1**; ADAAG 5.3]

A.3.3.3.2 Vending Machine Controls: UFAS requires that the controls and operating mechanisms of vending machines in restaurants and cafeterias comply with 4.27. ADAAG only requires that the spaces where vending machines are located comply with the space allowances and reach ranges requirements. [**UFAS 5.4**; ADAAG 5.8]

A.3.3.4 Health Care

A.3.3.4.1 Canopy at Passenger Loading Zone: The application of the term "Health Care buildings and facilities" in UFAS, which is not expressly defined, may require more facilities to provide a canopy or roof overhang and a passenger loading zone at their entrances. ADAAG specifically defines "Medical Care Facilities" which must have a roof canopy or overhang and a passenger-loading zone at an accessible entrance. [**UFAS 6.1**; ADAAG 6.1]

A.3.3.4.2 Patient Bed Spacing: UFAS requires that there be 900 mm (36 inches) along each side of a bed in patient bedrooms, 1 200 mm (48 inches) between beds, 1 100 mm (42 inches) between the foot of a bed and the wall, and 1 200 mm (48 inches) between the foot of the bed and the foot of the opposing bed. UFAS separately identifies requirements for one-bed rooms, two-bed rooms, and four-bed rooms. ADAAG treats beds in all rooms similarly and requires that there be 900 mm (36 inches) along each side of a bed. [**UFAS 6.3**; ADAAG 6.3]

A.3.3.5 Mercantile

A.3.3.5.1 Service Counters: UFAS requires that "a portion" of service counters in mercantile facilities be between 700 mm and 860 mm (28 and 34 inches) high. ADAAG requires a 900 mm (36 inch) length of service counter, which is a maximum of 900 mm (36 inches) high. [**UFAS 7.2**; ADAAG 7.2]

A.3.3.5.2 Check-Out Counter Height: UFAS requires at least one checkout counter to be no higher than 900 mm (36 inches). ADAAG requires that a specific number of checkout counters be no higher than 970 mm (38 inches) and that the top of the lip of the counter not exceed 1 000 mm (40 inches). [**UFAS 7.3(2)**; ADAAG 7.3(2)]

A.3.3.6 Libraries

A.3.3.6.1 Knee Space at Check-Out Areas: UFAS requires that at least one lane at each check-out area provide a counter surface that is between 700 mm and 860 mm (28 to 34 inches) high with knee clearances that are 700 mm (27 inches) high, 800 mm (30 inches) wide, and 500 mm (19 inches) deep in libraries. ADAAG requires that at least one lane at each check-out area provide a 900 mm (36 inch) length of counter which is a minimum of 900 mm (36 inches) high. ADAAG does not require knee space. [**UFAS 8.3**; ADAAG 8.3]

A.3.4 Additions and Alterations Where UFAS Is More Stringent or Different From ADAAG

A.3.4.1 Additions: UFAS requires that if an addition to a building or facility does not provide an accessible route, an accessible entrance, or accessible toilet facilities, and such facilities are provided in the existing building, then at least one of each shall be made accessible. ADAAG may require these items to be accessible under the path of travel obligation, depending on the amount of money required to build the addition. [**UFAS 4.1.5**; ADAAG 4.1.5]

A.3.4.2 Substantial Alterations: UFAS requires greater accessibility when substantial alterations are made to a facility depending on the amount of money spent on the alteration and the size of the building or site. ADAAG requires that, when an alteration is made to an area containing a primary function, the path of travel to that altered area and the restrooms, telephones, and drinking fountains that serve that area be made accessible unless the additional cost of doing so would be

disproportionate to the overall cost and scope of the original alteration to the primary functional area. The level of disproportionality is set at 20 percent of the cost of the original alteration to the primary function area. [**UFAS 4.1.6(3)**; ADAAG 4.1.6(2)]

A.3.4.3 Alterations: ADAAG provides that, in alterations, the requirements of 4.1.3(9), 4.3.10, and 4.3.11 concerning egress and areas of rescue assistance do not apply. UFAS does not have a similar exception but does not define areas of refuge. [**UFAS – no exception**; ADAAG 4.1.6(g)]

A.3.5 Procedural Where UFAS Is More Stringent or Different From ADAAG

A.3.5.1 Equivalent Facilitation: UFAS does not include a provision for equivalent facilitation. Entities covered by the Architectural Barriers Act of 1968 (ABA) must use the waiver and modification process as provided in the ABA in order to deviate from the requirements of UFAS. [**UFAS – no provision**; ADAAG 2.2]

A.3.5.2 Advisory Committee on Historic Preservation: UFAS allows only the Advisory Council on Historic Preservation to make determinations in cases of alterations to historic properties. ADAAG allows both the Advisory Council and the State Historic Preservation Officer to make such determinations. [**UFAS 4.1.7(1)(b)**; ADAAG 4.1.7(2)(a)(ii)]

A.4 Compliance Submittals

A.4.1 Compliance Certification Statement: Compliance with applicable criteria and certification of compliance is the responsibility of the A/E for all NIH projects. The A/E will be required to provide written certification that the design prepared for the NIH complies with the UFAS/ADAAG. This written certification shall be provided to the Project Officer with the transmittal letter for every design submittal.

A.4.2 Compliance Drawing: Every project must be accompanied by a compliance drawing layout showing all accessibility access required on the site and within the building, at all rooms, fixtures, and components required to be accessible. Typical layouts can be provided when more than one space of a particular type is included in the design. Drawings shall be included which identify, at a minimum, all accessible site and access features outside the building, parking, access routes and entrances, clear spaces required at common-use rooms, spaces, or elements (including clear

spaces at room entrances, toilet, shower, bathing and locker room fixtures, wheelchair turnaround space, etc).

A.4.3 Record Drawings: Record drawings provided at the completion of the construction project are required to identify all features included in the project related to accessibility. The compliance drawings may be used as the basis for these record drawings. Refer to NIH Division 1 Specification Section "Closeout Procedures" and Section "Project Record Documents" for specific requirements that must be included in the Construction Contract Documents.

A.5 Technical Assistance

The Access Board provides technical assistance on the ADAAG and UFAS for project specific questions. They can be reached at the following numbers:

1-800-872-2253 (voice)
1-800-993-2822 (TTY)
(202) 272-0080 (voice)
(202) 272- 0082 (TTY)
(202) 272-0081 (fax)

B. Sustainable Design

"Sustainable Design" is the design, construction, operation, and reuse/removal of the built environment (infrastructure and buildings) in an environmentally and energy-efficient manner. Sustainable Design, often also termed "Green Building Design," should be integrated into a project from the very beginning. "Green" is a small, but important subset of what defines "Sustainable." "Sustainability" is a much more inclusive criterion. It basically says that design and construction strategies not be performed in any manner that would reduce the choices or means available for future generations to fulfill their needs, just as the present strategies fulfill our needs.

"Sustainable" provides the broader conceptual, philosophical, long-range framework, while "Green" implies more practical, shorter range applications. The major difference between "Sustainable" and "Green" depends on how far to stretch the applications of criteria out in time and in space and in social concerns from the action under consideration and how those criteria start with human well-being as a central focus in one case and environmental alone in the other. All issues affecting human response and building performance should be considered in order to ensure a successful outcome.

Sustainable buildings minimize their impact on the environment. This impact includes how it uses energy, how the materials of its construction are derived, and how, over the life of the building, including its eventual demolition, it will diminish the finite resources of our planet. It includes the impact that the building will have on its occupants, especially as it relates to the issues of comfort, health, and well-being. The operation of the building, including the way it is maintained, also has an effect on the environment. This includes the use of solvents in cleaning, disposable materials from air conditioning filters, lamps and carpeting, and the use of nonrenewable energy resources such as fossil fuels.

Sustainable design principles shall be incorporated into all NIH design and construction projects to the greatest extent practical, for both new construction and renovation/alteration of existing facilities.

B.1 Integrated Project Team Approach

Sustainable Design decisions cross disciplines. Building products, components, and systems must be integrated and conceived holistically rather than as a series of independent decisions and components. Design decision-making must follow the goals and principles of sustainability as required by Executive Order (EO) 13123, *Greening the Government Through Efficient Energy Management*, dated June 3, 1999.

To ensure that these elements are seamlessly and thoroughly integrated with the overall design process, an integrated team approach from conceptual planning through design, construction, startup, and transition is essential. The team should consist of the primary stakeholders of the project including owners, developers, users, operators, architects, engineers, planners, value-engineering professionals, environmental designers, interior designers, Project Officers, Contracting Officers, construction contractors, primary subcontractors, facility managers, specialty consultants, and anyone with specific knowledge and interest that will contribute to the project's successful integration of sustainability.

B.1.1 Benefits: Sustainable development, as an integrated concept for buildings, seeks to reverse the past trends in architectural and engineering practice that focused on first costs and treated each discipline's contribution to the whole as a separate, independent effort.

Sustainable development integrates all the design disciplines so that limited resources are efficiently directed toward the goal of meeting the user's needs without setting one program element against another. The precepts for sustainability are that all resources are limited and that it is less expensive, in both the short and long term, to build in harmony with the environment.

By making a commitment to sustainable design, facilities typically perform better overall and have lower ongoing maintenance costs. Designing Green can lead to a more pleasing, healthy building, with better indoor air quality, increased day lighting enhanced by artificial light, and more pleasant indoor work environments. Studies have shown that sustainable features increase user satisfaction and worker productivity and decrease the use of sick days.

B.1.2 Goals of Sustainable Design: The overall NIH goal of Sustainable Design is to be environmentally responsible in the delivery of facilities. The key traditional elements for decision-making in the facility delivery process are cost, quality, and time. These elements need to be expanded to include the ecological and human health impacts of all decisions.

Each NIH project must develop its own set of goals for sustainability. However, Sustainable Design goals should apply to all projects. At a minimum, the following goals should be considered:

- Use resources efficiently. Minimize raw material resource consumption, including energy, water, land, and materials, both during the construction process and throughout the life of the facility.
- Maximize resource reuse, while maintaining financial stewardship.
- Move away from fossil fuels toward a greater use of renewable energy resources.
- Create a healthy work environment for all who use the facility.
- Build facilities of long-term value.
- Protect and, where appropriate, restore the natural environment.

Environmental goals and objectives to be implemented during the design process should be identified and included in the basis of design report.

Decisions made during the planning and design process should support NIH-wide reduction in the release of ozone-depleting chemicals (ODC) and greenhouse gases and reduction in the use of hazardous materials and pesticides and the generation of solid wastes. They should also support the Environmental Protection Agency (EPA) 33/50 Program (a voluntary program targeting 17 chemicals for reduction).

B.1.3 Value Engineering and Life-Cycle Cost Analyses for Sustainable Design: To support sustainable development, value engineering and life-cycle cost analyses shall be used during the conceptual planning, design, and construction phases of acquisition to evaluate the range of sustainable development options.

Performing Value Engineering and using Life-Cycle Cost Analyses during the conceptual planning phase are typically not standard practice. However, it is during the early phases of a project that the decisions having the greatest impact on cost and the sustainability of a facility are made, including decisions affecting operations, maintenance, and disposal. If there are tradeoffs to be made, it is clear that the

earlier in the process Life-Cycle Cost Analyses and Value Engineering are employed, the greater the potential to include the benefits of sustainable development and cost savings in the project.

B.1.4 Green Building Rating Tool: Assessment provides verification from an outside source that significant improvements have been made in the environmental performance of a facility. The latest version of the *Leadership in Energy and Environmental Design (LEED)™ Building Rating System*, developed by the U.S. Green Building Council (USGBC), is the standard for quantifying the performance of a building and its effect on the environment. This system provides a metric for the definition of Green building design, construction, and operation and has been selected as the rating system for use with NIH facilities. This is a sophisticated rating system widely used by many organizations, including the U.S. Air Force and the U.S. Department of State.

The USGBC is a nonprofit coalition for the building industry that comprises product manufacturers, facility owners and managers, architects, engineers, environmental organizations, utilities, State and local governments, contractors, builders, building control service contractors, and research institutes.

The system has undergone an extensive review by all members of the Council. The LEED™ Building Rating System has been developed for assessment of commercial buildings in the United States. While the standards have not been specifically detailed to biomedical research laboratories, animal facilities, and health care applications, many of the principles do have applicability to the facilities designed and constructed at the NIH and should be incorporated to the greatest extent possible.

B.1.5 LEED™ Reference Guide: The LEED™ Green Building Rating System is a priority program of the U.S. Green Building Council. It is based upon existing, proven technology and evaluates environmental performance from a “whole building” perspective. Although the criteria included in LEED™ are discrete elements, the process of designing and building to the LEED™ standard is best accomplished as a team effort. Refer to the most current LEED™ *Reference Guide* for applicable criteria for ratings.

The LEED™ guidelines should be discussed as part of an interdisciplinary team, formed at the outset of the design project, working together to understand and take

advantage of the synergies and tradeoffs among the various criteria. This collaborative process will result in an integrated design that optimizes environmental and economic factors.

B.1.6 Minimum LEED™ Rating Level for NIH Projects: Additional studies are currently under way at the NIH to determine the optimum rating level that projects should achieve. Until those studies are complete and further requirements are incorporated into this document, all NIH design and construction projects should strive to achieve a LEED™ Rating Level of "Certified" (26-32 points).

The Basis of Design document shall include a narrative of the sustainable features and systems for the building, all life cycle cost studies, and related information, including a copy of the completed LEED™ *Project Checklist*.

B.2 Energy Conservation

The International Energy Conservation Code shall be utilized to regulate the design and construction of the exterior envelopes and selection of HVAC, service water heating, electrical distribution and illuminating systems, and equipment required for the purpose of effective use of energy, and shall govern all buildings and structures erected for human occupancy. When requirements of the energy conservation code cannot be satisfied because of program requirements, the NIH Project Officer shall be notified.

At the completion of the design development phase, a plan review record, as defined in the International Energy Conservation Code, shall be submitted stamped and signed by a licensed professional engineer showing full compliance with the code.

Minimum system insulation thicknesses shall be as required by the energy conservation code and American Society of Heating, Refrigerating and Air-Conditioning Engineers (ASHRAE) recommendations. The minimum thickness in all applications shall be sufficient to prevent the possibly of condensation.

The quality of the building environment should be supportive of the health and safety of staff and animals. Opportunities for conserving energy resources shall not compromise staff or animals health and safety or hinder continuous research functions.

Energy and water conservation features incorporated in the design shall not restrict or interfere with medical and/or scientific functional requirements, cause a reduction in dependability of required services, or result in an inability to achieve environmental conditions required by other sections of these Guidelines.

Effective energy management requires close, consistent control of all energy consuming systems and components. A building-wide energy management and control system shall be provided to monitor and control energy consuming systems.

Systems using a high percentage of outdoor air or 100 percent outdoor air should consider the use of heat reclamation equipment. The capital cost, energy cost, reliability, maintenance cost, and payback period of the heat reclamation systems shall be evaluated for use at the NIH. Evaluations shall be compared to systems employing no heat recovery or energy conservation components.

B.2.1 Compliance with Executive Order 13123: All NIH facilities shall incorporate energy and water conservation features to comply with the requirements set forth in Executive Order (EO) 13123, *Greening the Government Through Efficient Energy Management*, dated June 3, 1999.

B.2.1.1 Sustainable Design Principles and Guidance: EO 13123 required the General Services Administration (GSA) and the U.S. Department of Defense (DOD) to issue sustainable design and development principles for new construction.

These principles and guidance shall apply to the siting, design, and construction of new facilities at the NIH and, to the greatest extent practicable, to those portions of existing facilities undergoing significant renovation or upgrade.

B.2.1.2 Reducing Energy and Water Use in Federal Facilities: The U.S. Department of Energy (DOE) has issued guidelines titled *Performance Goals for Industrial, Laboratory, and Other Energy-Intensive Facilities*, which shall be incorporated into the designs of all NIH facilities.

B.2.1.3 Use of Energy Efficient Products: The DOE and the EPA have developed an Energy Star® designation for products meeting certain energy performance criteria. Design and construction documents shall incorporate requirements to encourage the use and purchase of Energy Star® and other energy-efficient products for all NIH construction projects.

B.2.2 Climate Factors: Climate data establish performance requirements for the thermal design of the building. Overall composite heat transfer "U-values" and shading coefficients for glazing shall be used in conjunction with local climatology data to establish thermal performance requirements for NIH facilities. Insulation values may be altered when determined to be cost-effective, utilizing life-cycle cost analysis, for the given climatic conditions and building operating characteristics.

B.2.3 Solar Shading: Building orientation and shading should be arranged, when practicable, to minimize solar cooling load and maximize winter daylighting. Shading coefficients for glazed areas must be obtained from the ASHRAE *Handbook of Fundamentals* or from manufacturers' test data.

B.2.3.1 Glazed Openings: Glazed openings exposed to the sun will be completely shaded on the exterior not less than 80 percent of the time between the hours of 7:30 a.m. and 4:30 p.m. daily from June 1 through September 30. Solar shading may be accomplished by using a variety of architectural solutions, such as horizontal and vertical building projections, external solar-shading screens or baffles, or deeply recessed exterior windows. Additional components of the shading design such as light-reducing glass, heat-absorbing tinted glass, fully reflective glass, adjustable blinds, or combinations of these materials may also be provided to accomplish the required shading while developing the most desirable, cost-effective, and aesthetic solution.

B.2.4 Building Envelope Design Factors: The design of building envelopes shall comply with criteria for thermal loss and gain as stated in the latest edition of ASHRAE Standard 90, Section 4.0; Building Officials and Code Administrators (BOCA) *International Building Code*, Article 31, Energy Conservation; and the *Code of Federal Regulations* (latest edition of 10 CFR, Part 435, "Energy Conservation Voluntary Performance Standards for New Buildings; Mandatory for Federal Buildings"). In applying ASHRAE Standard 90, the following design characteristics should be used for all NIH buildings:

B.2.4.1 Windows, Exterior Doors, Glazed Panels, and Skylights: The National Fenestration Rating Council (NFRC) has developed a window energy rating system based on whole product performance. An NFRC label provides a reliable method to determine energy properties and compare products.

B.2.5 Perimeter Insulation: Perimeter insulation shall be provided inside all foundation walls to ensure that foundation walls are thermally isolated from concrete floor slabs. Perimeter and underfloor insulation shall be a closed cellular type to provide moisture resistance.

B.3 Heat Reclamation

Heat reclamation is the recovery and utilization of heat energy that is otherwise rejected as waste. Sources of this waste heat include exhaust air, lights, equipment, and people. Heat reclamation systems recover waste heat to satisfy part of the heat energy needs for heating, cooling, and domestic hot water systems. Heat recovery conserves energy, reduces operating costs, and reduces peak loads.

The performance of any heat recovery system depends upon the following factors: non-contaminated exhaust source (i.e., fume hoods and BSL-3 exhaust); temperature difference between the heat source and heat sink; latent heat difference (where applicable) between the heat source and sink; mass flow multiplied by specific heat of each source and sink; efficiency of the heat-transfer device; extra energy input required to operate the heat recovery device; fan or pump energy absorbed as heat by the heat-transfer device; and service capability of the maintenance staff, which can enhance or detract from the performance.

The basic principles of heat recovery can be implemented by various methods using different devices applicable to different systems or situations. Heat recovery devices reduce the peak heating and cooling loads when used with outdoor air systems.

The A/E shall determine the life-cycle cost for the following heat reclamation systems to determine their applicability. Consideration shall be given to the functional space requirements of the system and components.

B.3.1 Runaround System: This system comprises two or more extended surface coils installed in air ducts and interconnected by a piping system. The heat exchanger fluid, consisting of propylene glycol and water, is circulated through the system by a pump, removing heat from the hot air stream and transferring it to the cold air stream. A runaround-coil system may be used in winter to recover heat from warm exhaust air for use in preheating cold outdoor air, and in summer to cool hot outdoor air by transferring heat to cooler exhaust air.

B.3.2 Heat Pipe Systems: Heat pipe systems are composed of extended surface finned tubes extending between adjacent air ducts. The tubes are continuous from one duct to the other on the same horizontal plane. Each tube contains liquid refrigerant that evaporates at the warm end, absorbing heat from the warmer airstream, and migrates as a gas to the cold end, where it condenses and releases heat into the cold airstream. The condensed liquid then runs back to the hot end of the tube to complete the cycle.

B.3.3 Plate Heat Exchanger: Plate-type air-to-air heat exchangers transfer heat from one airstream to another through contact on either side of a metal heat-transfer surface. The systems shall have no cross-flow and provide antiseptic odor-free air as well as adaptability to extreme sensible and latent heat loads. Plate heat exchangers require the installation of supply and exhaust ducts side by side.

B.3.4 Heat Wheels: Desiccant-coated molecular-sieve heat wheels transfer only water vapor and exclude all other airborne materials, thereby eliminating the risk of cross-contamination. The systems shall have less than 1 percent cross-contamination and provide antiseptic odor-free air as well as total energy recovery. This system shall be installed only in laboratory general exhaust where fume hoods are exhausted separately.

B.3.5 Heat Pump as Heat Exchanger: Heat pumps are actually heat-transfer devices and, unlike those previously described, upgrade the temperature by as much as a factor of 3 to 1. This feature makes them particularly attractive for use with low-temperature heat sources. They also have the capacity to transfer latent heat as well as sensible heat.

B.3.6 Thermal Storage Systems: Systems employing the use of the various thermal storage technologies and applications should be considered when the design criteria afford the opportunity. Systems to be considered include ice, chilled-water storage, and the various types of low-temperature air distribution. Thermal storage comparisons shall consider that central chilled water is available year-round from the power plant.

B.3.7 Gravity Flow Systems: Gravity flow open-water systems shall be considered to reduce the run time of system pumps. These systems have a limited application and may apply to plumbing systems only.

B.4 Electrical Devices

B.4.1 Motors and Drives: Motors form a large portion of building energy load and are usually part of the mechanical systems of the building. High-efficiency motors generally have a payback of 2 years or less. Variable-speed drives usually have similar results depending on the variability of the driven load and therefore shall be considered for application in buildings. Power factor correction capacitors shall be employed on applicable motors to satisfy code requirements.

Two-speed motors shall be used where a fan or pump has two levels of operation, such as occupied/unoccupied. Two-speed motors come in two varieties: single winding and two winding. For most pump and fan applications, a variable torque, one-half speed motor is used.

Several types of variable-speed drives are available, including mechanical, fluid, and variable frequency/voltage units. The variable frequency/voltage drives vary the output for a standard alternating current (AC) motor by varying the input frequency and/or voltage to the motor. Where required, special filtering should be included. These types of drives provide the highest energy savings and shall be used for fans or pumps with throttling devices that vary output according to needs.

B.4.2 Electronic Ballasts: Electronic ballasts shall be used in all fluorescent lighting fixtures. See the Lighting section for ballast specifications.

B.4.3 Fluorescent Lamps: Fluorescent lighting fixtures shall use T8 (25 mm diameter) or compact fluorescent lamps. The ballast/lamp combination shall have an efficacy in excess of 80 lumens per watt (LPW).

B.4.4 Programmable Lighting Control (PLC): The use of relays to control lighting circuits or subcircuits with a programmable controller is encouraged from an energy conservation standpoint. The system should be flexible and easy to use. There shall be a warning of an impending off-cycle to allow occupants the opportunity to dial an override command on the telephone or press an override switch. Corridors are a good application for PLCs with local override switches or occupancy sensors to control a minimal amount of corridor lighting.

B.4.5 Occupancy Sensors: Occupancy controls shall be utilized in individual offices, public areas where feasible, such as service corridors, large rooms, and

lavatories. Dual technology sensors (ultrasonic-type with passive infrared) shall be used. Lighting in service areas including maintenance, electrical, and mechanical rooms shall be manually controlled by smart-type timer switches.

B.4.6 Lighting Control: Localized switching shall be provided in lieu of large-area switching. Labs shall be switched in 3.4 m-wide groups within multimodules.

B.4.7 Multilevel Switching: Dual switching shall be provided where appropriate with three or four-lamp fluorescent light fixtures. The fixtures shall have two ballasts, one for the inner lamp(s), and one for the outer lamps. One switch controls each ballast, providing the flexibility of one, two, three, or four lamps to be lighted. Tandem wiring is not acceptable.

B.4.8 Environmental Protection Agency Greenlights Program: The Greenlights program has many good recommendations for energy savings through lighting. The Greenlights program requires an economic analysis of the energy-saving options to determine, on a life-cycle cost basis, which options are viable. The Greenlights program makes recommendations not only primarily for retrofit of existing lighting, but also for new installations.

B.4.9 Day Lighting: Spaces within buildings with large amounts of exterior glass or skylights shall utilize photocell control of electric lighting. Lobbies as well as exterior offices are good examples of daylighting opportunities. Adjustable photocells must be the overriding control to allow for cloud cover and twilight. Zoning the lighting in rows of fixtures parallel to the exterior wall is preferred. Dimming of fluorescent fixtures in response to a photocell is also a way of saving energy.

B.4.10 Exit Signs: Light-emitting, diode-type exit signs shall be used at the NIH.

B.4.11 Metering: Metering of the building's electrical service is essential for monitoring energy consumption and taking an active role in energy conservation.

B.5 Systems Economic Analysis

The purpose of an economic analysis is to determine the comparative life-cycle costs of various architectural, HVAC, and electrical system alternatives. The analysis shall provide sufficient data to indicate the most economical and energy-efficient system and to permit a comprehensive review of all computations. The analysis shall include

and compare total initial capital cost, energy cost, operating cost, system reliability, flexibility, and adaptability for each alternative. Each system alternative considered shall satisfy completely the program requirements as to flexibility, redundancy, reliability, and ease of maintenance. The total capital cost to provide the program requirements for each alternative shall be included as part of the life-cycle cost.

B.5.1 Life-Cycle Costs: Throughout the development of a project, life-cycle cost analysis shall be used in making decisions about which products, services, and constructions are utilized to lower the Federal Government's costs and to reduce energy and water consumption. Inefficient systems and equipment shall be retired on an accelerated basis where replacement results in lower life-cycle costs to the greatest extent practicable. All project cost estimates and budget activities for design, construction, and renovation of facilities shall be based on life-cycle costs. Facilities shall be designed and constructed to the lowest life-cycle cost whenever possible. This guidance is also included on the National Institute of Building Science "Whole Building Design Guide" Web site.

For comparison of systems, the life-cycle and operating cost shall be 30 years corresponding to the anticipated useful life for major equipment. Replacement costs shall be included for equipment with less than the chosen life cycle.

- The escalation rate for fuel or energy cost (oil, gas, coal, electricity, etc.) shall be based on procedures set by the U.S. Department of Energy (DOE) in National Institute of Science and Technology (NIST) Handbook 135, *Life Cycle Cost Federal Energy Management Program*.
- Initial capital cost shall include all equipment, auxiliaries, and building-related cost for each complete system.

The NIH definition of construction costs is based on R.S. Means Cost Data, modified to include LAN and IT costs.

$$\text{Unit Construction costs} = \frac{\text{Total Construction Costs}}{\text{Gross Square Meters}}$$

See Volume: Appendices for methodology to calculate gross and net area for NIH facilities.

Refer to the ASHRAE *HVAC Systems and Equipment Handbook* chapter entitled "Owning and Operating Costs," for a complete listing of items to be included in the economic analysis.

B.5.1.1 Computerized Analyses: The A/E shall perform a computerized energy analysis and a life-cycle cost analysis using a professionally recognized and proven program that makes hourly calculations as a basis. Suitable programs include Carrier E 20-11 HAP, DOE 2.1 or latest version, Trane Trace Ultra, and Blast. If other programs are to be considered, documentation showing Federal and State approval should be forwarded for approval prior to the start of work. Manual or computerized spreadsheet methods may be used to evaluate system alternatives when approved by the NIH Project Officer.

Building HVAC systems suitable for consideration in economic analysis include the following systems or combinations of systems:

- Variable air volume (VAV) with reheat terminal units
- VAV with independent perimeter heating
- Constant air volume (CAV)
- CAV with reheat terminal units
- CAV with independent perimeter heating
- Fan-powered VAV with terminal reheat units
- Dual-duct VAV
- Dual-duct CAV
- Fan-coil air conditioners
- Low-temperature air system

B.5.2 Energy Cost: Energy cost computations shall take the base load into consideration. The NIH will provide utility usage and rates. Backup computations for items listed in the operating cost shall also be included.

Computation shall be made on a monthly basis, taking into account variations in the heating and cooling loads. Energy usage and cost shall be developed by computer programs using weather bureau tapes or by using Air Force Handbook (I) 32-1163, *Engineering Weather Data* and the bin method procedure referenced in the latest *Fundamentals* volume of the ASHRAE *Handbook.*

Energy cost computations shall take into consideration the energy used by fans, cooling and heating coils in the system, and refrigeration plant energy costs that are a result of the type of air-conditioning system in the building. Steam and chilled water costs will be as provided by the NIH.

B.5.3 Life-Cycle Cost Calculations: For cost comparison, amortization of first cost and the present worth of life-cycle operating costs shall be calculated and combined to obtain the present worth and annual owning and operating costs of each system.

- Public Law 95-619 requires that life-cycle cost analyses for Federal projects conform to procedures set forth by the DOE. The following factors are used for the life-cycle cost analysis:
  - Interest (discount) rate of 7 percent for future costs (or as published by DOE).
  - Zero inflation factor for all future costs other than fuel.
  - Fuel inflation factors as determined by the DOE in the latest supplement to NIST Handbook 135 that represents the extra inflation of fuel over general costs. The fuel inflation factors can be expressed and used as modified uniform present worth (UPW) discount factors, which, when multiplied by the first-year fuel costs, give the present worth of a series of escalating annual fuel costs. These factors are published for four census regions.

Total present worth is equal to the sum of the first (construction) cost and the present worth of maintenance, replacements, utilities, electricity, and fuel payments for 30 years. All of the above present worth should be based upon appropriate construction schedules.

The annual equivalent cost is the payment that will amortize the total present worth in years at the given interest rate using a capital recovery factor (CRF) cost. Taxes or insurance are not included in the annual owning cost.

B.6 Indoor Air Quality

The following are suggested measures and strategies that will help improve indoor air quality.

B.6.1 Source Control: Wherever possible, eliminate potential contaminants at the source and prevent contaminant entry into the building by:

- Designing for no smoking
- Testing for radon
- Requiring full systems commissioning
- Increasing stack to protect intakes from reentrainment
- Placing intakes away from roadways and garages
- Negatively pressurizing loading areas to positive building

B.6.2 Source Isolation: Potential sources of contamination from the airstream should be separated by:

- Selecting low VOC emission materials and finishes
- Reducing sources of microbial contamination
- Testing large material assemblies for impact to indoor air quality
- Flushing out building prior to occupancy

B.6.3 Source Dilution: Ventilation and filtration to reduce contaminant concentration should be utilized by:

- Providing ASHRAE 30 percent prefilters and 85 percent final filters
- Limiting use of duct liners
- Considering scrubbers on lab exhaust
- Eliminating volatile amines for corrosion inhibition
- Installing wet off-gassing materials before dry “sink” materials
- Installing and balancing systems properly

B.6.4 Potential Air Contaminants: The following potential contaminants include:

- Adhesives
- Carpet
- Carpet pad
- Caulks
- Ceiling tiles and panels
- Composite wood products
- Control joint fillers

- Floor and wall coverings
- Glazing compounds
- Insulation
- Paint
- Sealants
- Wood finishes
- Wood preservatives

B.7 Recycling

The following are suggested measures and strategies that will help reduce waste by recycling.

B.7.1 Raw Material Composition: Where possible, select materials that are:

- Nontoxic, renewable, or salvaged
- Sustainable source and have recycle content
- Locally available

B.7.2 Production Process: Within the production process, consider:

- Amount of energy and water used
- Amount of solid, liquid, and gas emitted
- Manufacturing plant energy efficiency
- Water conservation and reuse
- Minimizing waste by careful dimensioning of materials
- Designing for disassembly and material reuse

B.7.3 Packing and Shipping: Consider the following:

- Locally manufactured products and efficient shipping methods
- Minimal packaging or includes reusable or recycled materials
- Developing a management plan for handling hazardous materials

B.7.4 Installation and Use: Installation considerations include:

- Evaluating life-cycle impacts of materials and systems
- Product durability, repair potential, and low maintenance
- Chemical emissions on installation or maintenance
- Balancing environmental performance with cost and durability
- Modular design that minimizes construction waste

B.7.5 Resource Recovery: Recovery options include:

- Salvageable, recyclable, biodegradable, or take-back program
- Site waste shredded into mulch
- Establishing minimum recycled content levels
- Providing collection systems
- Adaptive reuse of existing buildings

B.8 Management

The following are suggested measures and strategies that will help improve the management of sustainable design.

- Save trees during and after construction.
- Use pervious materials.
- Preserve wetlands.
- Protect existing water sources from erosion or contamination.
- Maximize use of sheet flow.
- Use site for storm water retention and filtration.
- Reduce the use of fertilizers with low-maintenance native species.
- Structure parking to reduce impervious surface.
- Use bioretention areas for concentrated flows.
- Use grassy swales instead of curb and gutter.
- Develop flexible modular space plans.
- Develop equally flexible mechanical, electrical, and plumbing infrastructure.
- Improved building efficiency with sharing.
- Move people, not walls.
- Accommodate change in labs with minimum of waste and disruption.

- Leave lab infrastructure intact while walls are reconfigured.
- Build interstitial space to allow addition and changes of lab services from outside the lab.
- Design lab modules to be interchangeable.
- Extend service life of lab casework.
- Use equipment that does not use CFCs and HCFCs.

C. Site/Civil

This section describes the general guidelines for various site requirements for any new building. The NIH campus has been developed to provide a pleasant environment for the enhancement of the research that takes place on campus. An important part of this environment is the suburban campus-type setting with attractive landscaping and a minimum of paving. The important research conducted at the NIH requires the support facilities to be constructed to the highest standards available in the industry to minimize disruption caused by repair and reconstruction. The Division of Facilities Planning has prepared campus Master Plans for buildings as well as underground utility services. These plans should be followed whenever possible.

C.1 Reference Codes and Standards

The following standards should be followed when constructing new structures on NIH campuses located in Montgomery County, Maryland:

- NIH Campus Master Plan in locating new campus facilities
- NIH Master Utility Plan in locating existing campus utilities
- NIH Tree Inventory
- Maryland Department of Transportation State Highway Administration Standard Details for installation of storm drains
- Washington Suburban Sanitary Commission for installation of domestic water and sanitary sewer
- Montgomery County Department of Transportation, Standard Details for Roadways, for installation of roadways, parking, and miscellaneous appurtenances
- Maryland Department of Environment (MDE), Standard Details for Sediment Control and Storm Water Management

C.2 Preliminary Planning Criteria

Existing utilities shall be located from the NIH Master Utility Plan. Locations should be verified with frequent test pits using vacuum dig techniques to avoid disruption to the campus. New buildings or additions should be coordinated with the Office of

Facilities Planning and located in conformance with the NIH Campus Master Plan to minimize disruption to existing campus operations including utilities, traffic, parking, pedestrian access, and mature trees. Vehicular and pedestrian access should blend with existing traffic patterns. Access for emergency vehicles, including fire and police, must be provided.

Borings and geotechnical reports should be obtained from a qualified geotechnical consultant licensed to practice in the State where the work is to be implemented and the report should include a preliminary recommendation for sheeting and shoring. All existing underground steam and condensate piping to be disturbed should be tested for asbestos-contaminated insulation. Existing natural features such as trees, slopes, and drainage characteristics should be preserved whenever possible. The construction of large and significant projects that impact day-to-day NIH activities should be phased to minimize disruption to the campus.

Contractor staging areas should be identified as early in the project as possible and reasonable space provided for contractor parking, trailers, cranes, delivery vehicles, maneuvering, and other site-specific factors. The staging areas should be surrounded by a temporary 1 800 mm chain-link fence with brown plastic screening material.

C.3 Site Design

C.3.1 Parking and Paving: Parking for vehicles shall be coordinated through the Office of Facilities Planning and provided in conformance with the NIH Memorandum of Understanding (MOU) with Montgomery County. The size and types of parking spaces should be in conformance with Montgomery County regulations. Handicapped spaces should be adjacent to buildings whenever possible.

Roadway and parking lot paving sections shall conform to the following:

Table C.3.1 Parking Lot and Roadway Paving

Area	Item	Paving Section
Parking lot	Sub-base	Compacted soil base
	Base	100 mm base course bituminous concrete (BI)-one lift
	Surface	50 mm surface course bituminous concrete (ST)-one lift

Area	Item	Paving Section
Roadways	Sub-base	Compacted soil base
	Base	Two 100 mm lifts of base course bituminous concrete (BI)
	Surface	50 mm surface course bituminous concrete (ST)-one lift

C.3.1.1 Sidewalks, Curbs, and Curbs/Gutters: Optimum sidewalk width is 1 830 mm, with 1 525 mm being the minimum. Concrete should be a minimum of 90 mm, 25 MPa, 6 to 8 percent air entrainment, 1 kg of powdered carbon black per 1.3 m^3 (or at the rate of 19 L of liquid carbon black per 12 m^3) of concrete and sealed with clear curing compound.

C.3.1.1.1 Material Exclusions for Common Pedestrian Sidewalk Areas Subject to Use by Snow Removal Equipment: The following materials are not permitted on any NIH projects because of intensive maintenance requirements or safety concerns:

- Cobblestones
- Asphalt hex pavers on asphalt base
- Exposed aggregate concrete
- Any type of paver material on gravel/sand base course
- Pavers on plastic blocks
- Precast concrete interlocking pavers on sand base
- Granite, brick, or slate on concrete base (because snow-melt compounds cause "pop-up")

C.3.1.1.2 Material Exclusions for Curbs and Curbs/Gutters: Granite curbs are not permitted on any NIH projects because they are vulnerable to damage by snowplows, create unsafe conditions for pedestrians, and are expensive to replace.

C.3.1.1.3 Sidewalks to Major Building Entrances and Major Building Feature Areas: Durable, air-entrained, colored (other than carbon black), stamped concrete may be used for these areas.

C.3.2 Loading Docks and Delivery and Service Areas: All new campus buildings and buildings subject to major retrofitting require the installation of loading docks. The primary purpose of the loading dock is to facilitate movement of materials into and out of buildings. Loading docks should be located in areas of the building that are separated

from normal daily pedestrian and vehicular traffic and should be sized for safe maneuvering as well as for loading and unloading equipment such as pallet trucks.

Loading docks should be sited to prevent the entry of pests and designed to create an effective barrier between the outside of the facility and the interior. Loading docks are a functional extension of the facility and should be designed and managed to facilitate proper and efficient movement of materials into and out of the facility along with a dockyard that is easily cleaned and maintained. Current and future facility needs should be taken into consideration when planning and designing allocated space for loading docks. Facilities expand, needs change, and docks should be conceived with long-term viability in mind.

For additional information, see General Design Guidelines, Section: Architecture, and Section: Structural. For additional loading dock requirements specific to animal facilities, see Animal Research Facilities, Section: Programmatic Goals and Objectives.

C.3.2.1 Shipping and Receiving Areas: Shipping and receiving marshalling space should be adjacent to the dock. The dock area also requires an office and telephone for the dock manager, toilet facilities, and an area to house vending machines. Vending areas must be designed to promote proper cleaning and sanitation. Materials used throughout these spaces should be durable enough to withstand high personnel use and regular cleaning activities. The loading dock berths, dock area, and adjacent functional areas should be securable after hours and should be designed to minimize the harboring of pests.

C.3.2.2 Waste Management Areas: Separate spaces should be provided within the dock area for holding and disposing of medical pathological waste, hazardous waste, radioactive waste, mixed waste, general waste, and recycling waste. Waste should not be staged for removal inside the receiving area of the loading dock. The dock entry points used for materials receiving or personnel must be isolated from the solid waste compacting, handling, and storage operations, as solid waste operations can be attractive to pest species that are invasive to the facility.

C.3.2.3 Trash Dumpsters and Compactors: A separate area for a minimum of one dumpster should be programmed within the loading dock space. This area shall be constructed of a 200 mm-thick reinforced concrete pad at least 9 150 mm in length. The dumpster should not block the loading dock, but access for disposal of trash to the

dumpster should be directly from the loading dock. Whenever possible, compactors should be used to promote good sanitation and to minimize attraction to pests. Compactors should be sited and designed to facilitate proper use and cleaning.

C.3.2.4 Access and Truck Size: Access to loading docks will be directly from NIH campus roads. No access through parking lots will be permitted. Roadways leading to loading docks and adjacent tarmacs should be of sufficient size and configuration to accommodate vehicles of various sizes up to and including tractor-trailer class.

C.3.2.5 Overhead Protection: Loading dock designs should allow materials to be protected from inclement weather conditions while loading and unloading vehicles. Any overhangs or canopy projections in the vicinity of the loading dock must be of a sufficient height so as to provide necessary truck clearances, including allowing for the removal of refuse containers. Review of these design features by the Environmental Protection Branch is required prior to finalizing design.

C.3.2.6 Loading Dock Berths: A minimum of two loading dock berths per building should be provided. Some buildings require additional berths depending on the function of the facility. For facilities housing animals, a dedicated animal berth that is visually protected for security should also be provided in addition to the two berths previously identified. This berth must be physically segregated from other dock berths and dock support functions. This includes vehicle docking and materials/supplies staging. Loading dock berths should be equipped with hydraulic load levelers, and at least one should be equipped with a hydraulic scissors lift capable of carrying a 1 016 kg load as a minimum.

C.3.2.7 Parking and Wheel Chocks: Tarmacs on grade must have wheel chocks available that meet Occupational Safety and Health Administration requirements. Adequate short-term parking should be available for courier service vehicles.

C.3.2.8 Dock Protection: Protective metal dock plates at the edge of the dock should be provided. Commercial-grade dock bumpers (shock-absorbing design, manufactured of pliable rubber) should be mounted under load levelers. Barriers that can prevent a truck from damaging the load leveler when backing to the leveler should also be provided.

C.3.2.9 Drainage and Grading: Adequate drainage should be provided by use of trench drains or positive drainage away from the dock, with a minimum gradient of 1.0 percent.

C.3.2.10 Service Ramp: A ramp with a gentle grade should be provided near the loading berths to allow small deliveries via lightweight equipment, such as two-wheeled hand trucks or four-wheeled platform trucks, and to allow personnel to reach grade from the loading dock.

C.3.2.11 Snow-Removal Areas: Areas for piling snow from snow removal operations are desirable and should not block the dumpster or the loading dock. Heated pavement is not permitted for snow removal because of maintenance and energy concerns.

C.3.2.12 Screening: Visual screening of all loading areas is desirable to minimize audible and visual disruption to the NIH campuses and surrounding communities. Screening can consist of fences, walls, landscaping, and so on. Landscaping in the area of loading docks should minimize cover and harborage for birds and rodents. Ivy and other low-growing, dense ground cover in the vicinity of loading docks are not recommended. Screening should be carefully coordinated with security and closed-circuit television requirements.

C.3.2.13 Telephone/Doorbell: Notification of delivery to dock service personnel should be via a doorbell and “house” telephone located on the exterior of the loading docks. Provisions for installation of a pay telephone inside the building, within the dock shipping and receiving area, should be considered.

C.3.2.14 Lighting: Exterior building lighting in the loading dock area should be indirect to the loading dock to reduce the attraction of flying insects. Do not use wall-mounted lighting and do not install lights directly above receiving or personnel doors.

C.3.2.15 Dock Washdown: Facilities should be provided for loading dock washdown and cleanup activities.

C.3.2.16 Surface-Mounted Elements: There should be no exposed conduit, piping, ledges, equipment, wall-mounted lights, and so on in and around the area of the loading dock bays. These elements provide loafing and nesting sites for nuisance birds and are difficult to clean.

C.3.3 Grading: Proposed grading plans should be coordinated with ORF. Maximum slopes on lawn areas should be 3:1 to permit safe mowing. If slopes are required to be steeper than 3:1, a retaining wall with a top railing should be investigated. Minimum slopes on lawn areas should be 2 percent positive slope away from buildings. Maximum slopes of sidewalks shall not exceed 8 percent unless approved by the ORF. Railing should be installed when the slope exceeds 5 percent. Slope limitations and rest points for the disabled shall be in accordance with the UFAS/ADAAG requirements.

A 1 000 mm-wide by 150 mm-deep pea-gravel barrier with a physical weed geotextile should be provided around all new or newly landscaped buildings for pest management. Aluminum or steel edging should be used around the barrier. All planting beds should begin outside the gravel strip.

C.3.4 Landscaping: The site grading and selection of plant materials should be coordinated with ORF during the early design stage, and strive to select plant material native to the Mid-Atlantic region and avoid invasive exotic material. The following list includes trees and shrubs compatible with existing NIH plantings and standard practices.

Table C.3.4 Trees and Major Shrubs

Deciduous Trees			
I.	**Oak:** Willow, Pin, Scarlet, Red, and Black	VIII.	**Koelreuteria**
II.	**Ash**	IX.	**Sophora Japonica**
III.	**Maple:** Red (Red Sunset), Sugar (Green Mountain)	X.	**Amelanchier**
IV.	**Little Leaf Linden**	XI.	**Crab Apple**
V.	**Dogwood:** Florida, Kousa, and Mas	XII.	**American Hornbeam**
VI.	**Cherry**	XIII.	**Hawthorn**
VII.	**Redbud**	XIV.	**Crepe Myrtle**
Evergreen Trees			
I.	**Pine:** Black, White, and Austrian	IV.	**Chinese Holly**
II.	**Canadian Hemlock**	V.	**Norway Spruce**
III.	**American Holly**	VI.	**Cedar**

Major Shrubs			
I.	**Azalea Verities**	VII.	**Japanese Holly**
II.	**Rhododendron**	VIII.	**Juniper**
III.	**Forsythia**	IX.	**Boxwood**
IV.	**Abelia**	X.	**Euonymus Fortunei**
V.	**Viburnum**	XI.	**Taxus**
VI.	**Cotoneaster**	XII.	**Weigela**

All disturbed areas not paved or landscaped shall be restored with State or local jurisdiction-approved certified sod on a minimum of 75 mm of topsoil. Landscape planting, for both aesthetic and functional needs, can impact the number and types of pests found in the exterior of the building envelope. See General Design Guidelines, Section: Pest Management, for additional landscape requirements.

Lighting of exterior areas of the campus is critical to campus security. The design of landscaping and lighting should minimize areas suitable for hiding and avoid any dark areas. An average 50 lux light level shall be maintained for all areas.

C.3.5 Utility Service: Centrally supplied services for the following utilities are available on the NIH campus with the following minimum criteria:

Table C.3.5 Utility Services - Size and Material

Utility	Minimum Size (mm)	Material
Storm drain	300	RCP
Sanitary sewer	150	PVC SDR 35
Domestic water	150	Cement-lined ductile iron
Chilled water	≥150	Steel, extra heavy seamless
	<150	Steel, schedule 40 seamless
Steam	≥150	Steel, extra heavy seamless
	<150	Steel, schedule 40
Condensate	<150	Stainless steel, schedule 40
High pressure drip	NA	Stainless steel, schedule 40

Utility	Minimum Size (mm)	Material
Natural gas	NA	Plastic type
Compressed air	>100	Steel, schedule 40
	≤100	Copper

C.3.5.1 Utility Service Computer Modeling: The NIH has developed extensive computer modeling for existing utilities. Expansion of these utilities requires the use of the following programs for analysis:

Table C.3.5.1 Required Computer Modeling

Storm Drain	EDS Storm Drain
Sanitary sewer	EDS sewer
Domestic water	KY pipe
Chilled water	KY pipe
Steam	Steamnet
Other	No standard

C.3.6 Sediment and Erosion Control: Sediment and erosion control drawings must be prepared for any construction that results in ground disturbance in States or local jurisdictions where they are required. For NIH projects in the State of Maryland, where a project nears or exceeds the Maryland Department of the Environment (MDE) threshold (disturbance of 465 m^2 of existing ground **or** the movement of 76 m^3 of soil), an MDE permit for sediment and erosion control is required. It is strongly recommended that a permit be requested for any NIH project that disturbs 370 m^2 of existing ground. Sediment and erosion control projects with greater than 4 000 m^2 of disturbance shall comply with MDE General Permit Number 97-GP-0004, which requires additional inspections. Additional fees, record-keeping, and other requirements may also apply.

It is NIH policy to control sediment and erosion control to the maximum practicable extent. Therefore, any construction that results in ground disturbance will be subject to NIH sediment and erosion control protection policy. This will be project specific,

and usually the minimum will be required. The Project Officer shall contact the Division of Environmental Protection (DEP) for specific guidance.

Erosion and sediment control permit drawings shall be prepared by the architect/ engineer (A/E) and submitted through the Project Officer to the DEP for review. The A/E will make a submission to the MDE or other States where they are required when it has been determined by DEP that the documents meet MDE or other State requirements. Please note that it is highly recommended that MDE review be made through the use of an MDE-approved "expedited" reviewer. No site work is to commence prior to holding a sediment and erosion control preconstruction meeting with the MDE inspector when a permit is required. When a permit is not required, the installation of sediment and erosion controls required by DEP must be in place before site work begins.

C.3.7 Stormwater Management: All construction must meet the requirements of the MDE and the NIH Master Plan for stormwater management.

D. Architecture

Excellence in design is a primary goal for all NIH design and construction projects. A commitment to quality by the design and management team is necessary to achieve this goal. Quality architectural and interior design can have a direct impact on improving the facility's operating efficiency, attractiveness, life-cycle economics, and, ultimately, the productivity of the facility users. Design excellence does not add to project costs, but does require a balanced approach to design, which optimizes the functionality, aesthetics, quality, and maintainability of facilities.

Designs should consider architectural compatibility with the NIH campus and NIH Master Plan objectives, functional requirements, economy of construction, energy conservation, interior and exterior details, and life-cycle costs. Facility designs should address the needs of all users of the facility and enhance the lives of these users while providing the latest state-of-the-art features to further the goals and objectives of the NIH throughout this century. For additional requirements specific to biomedical research laboratories and animal research facilities, see the applicable first two volumes of the NIH Design Policy and Guidelines.

D.1 Building Design

D.1.1 Design Modules: Modular design should be considered where appropriate. The building module used must consider the fire protection requirements, which require that each level be subdivided into smoke zones in accordance with the requirements of National Fire Protection Association (NFPA) Standard 101.

D.1.2 Functional Design: Floor plan shapes should be simple and functional so as not to restrict flexibility. Narrow or irregular floor shapes should be avoided. Permanent plan elements, such as mechanical shafts, stairways, and reinforced concrete vaults, should be located to minimize their impact on functional use areas or future expansion of critical areas.

D.1.3 Building Circulation: Adequate circulation space should be provided at points of traffic congestion. Architectural features should emphasize overall circulation patterns and major entrances to departments. Circulation throughout the building should be efficient and direct without being restrictive. Clearly defined horizontal and vertical circulation routes for people, equipment, supplies, research animals, waste

disposal, and maintenance and repair activities are needed to ensure security and safety. Service corridor circulation, ghost corridor circulation between laboratories, and primary circulation patterns between department functions, laboratories, offices, and animal or lab support spaces shall be clearly addressed early in the design process. The location of stairways and transition ramps shall be studied at connections between buildings with different floor-to-floor heights. Circulation should be made more efficient by:

- Avoiding confusing hallway systems and the extension of through corridors from department to department.
- Avoiding horseshoe shapes in major corridor systems that require excessive walking distances.
- Avoiding dead-end departmental corridors.
- Minimizing the use of single-loaded corridors.
- Eliminating major corridors through elevator lobbies or through other areas that tend to concentrate circulating personnel.
- Locating vertical transportation element(s) so that they are easily visible from major entrances.

For additional guidance on determining corridor width, see *NIH Manual Chapter 1361 – Corridor Utilization,* dated April 29, 1998.

D.1.4 Massing Design: Consideration should be given to the visual impact of any new structure, especially to a new addition on an existing building, and to the massing effect on surrounding views.

D.1.5 Integration of Building Systems Design: Integration of Building Systems (IBS) concepts shall be applied to the design of all new biomedical and animal research facilities and, when warranted, to the design of other facility types on the basis of size or complexity. IBS design involves the coordinated design of all elements of a building, integrating the functional, architectural, accessible, structural, mechanical, electrical, fire protection, energy, telecommunications, and other features into a unified whole. All design elements are recognized as essential to a successful facility design and, as such, are to be treated simultaneously and with equal weight. The primary objective of an integrated design approach is to achieve a building with optimum functionality, flexibility, adaptability, appearance, and maintainability. Inherent in IBS design for biomedical and animal research facilities is the precept that maintenance traffic and maintenance activities are minimized within

functional areas through the careful location of equipment rooms and utility services. Equally important is the assurance of proper installation and maintainability of primary and distribution equipment through careful consideration and coordination of envelope space requirements. Utility system space planning must occur simultaneously with overall site and facility functional planning.

D.1.6 Floor-to-Floor Height Design: Determination of finished-floor to finished-floor heights in all facilities is a multidisciplinary task. Adequate space must be included in all above-ceiling space for coordination, installation, and maintenance of building service systems such as mechanical, plumbing, electrical, and telecommunications distribution systems, unique structural considerations, and utility piping. Elements requiring special ceiling heights should be grouped together to the greatest extent possible and on the fewest floors consistent with proper functional design.

D.1.7 Future Expansion Considerations: Expansion of expensive existing departments can often be coupled with relocation of lower cost functions. Placing departments on outside walls with adjacent site space available for expansion also adds future flexibility. Corridor patterns can enhance circulation and flexibility. Adequate access to general circulation is needed for each department to facilitate visitor, patient, staff, and material traffic. Open plans, where feasible, allow easy departmental change. Floor plans that encircle a department with permanent corridors, stairs, mechanical rooms, or other building elements difficult to relocate should be avoided.

Functional elements should be grouped in accordance with the following objectives. Where difficulties arise in the mutual accommodation of both of the following objectives, the objective stated in item 1 below shall be given priority.

1. Elements should be combined on the basis of functional adjacency requirements to facilitate better functional flow and reduced operating and staff costs.
2. Elements with similar electrical, mechanical, and structural requirements should be combined to facilitate savings in construction costs.

Consistent with proper functional adjacency planning, soft-functional areas (areas with minimal amounts of plumbing, special finishes, special mechanical features, and special power demands) should be placed between hard-functional areas (areas with appreciable plumbing, special finishes, special mechanical features, and special

power demands) to permit future growth of the hard-functional areas by relocation of the less costly soft-functional areas.

Column-free functional areas should be ensured where possible while minimizing the use of transfer beams. Vertical column compatibility shall be provided in multi-story facilities. Electrical, mechanical, plumbing, and other support systems should be designed to permit modifications in support of scientific and medical functional changes with the least life-cycle cost and least disruption to the overall operations. Utility areas shall be located to ensure cost-effective connections to site utilities and efficient distribution to functional areas. To enhance and improve utility distribution, stack similar utility areas vertically in multi-story facilities to the greatest extent possible. Provide adequate space for all required code safety clearances as well as for maintenance and repair operations within utility spaces. Additional information relative to utility requirements is contained in the Mechanical, Plumbing, Electrical, and Communications sections of the General Design Guidelines.

D.1.8 Air Infiltration: All new construction and projects that substantially alter the building envelope shall be designed to minimize air infiltration at locations separating the outdoors from interior conditioned spaces. Windows and doors shall be weather-stripped. Exterior joints, cracks, and holes in the building envelopes should be designed to be caulked, gasketed, weather-stripped, or otherwise sealed. All new construction and buildings that are substantially altered must include airlock vestibules or revolving doors at all primary entrances and exits to reduce infiltration due to stack draft effect.

D.2 Exterior Design Guidance

Exterior elevations shall be compatible with the styles of previously constructed permanent facilities of the campus and with the elements proposed in the NIH Master Plan. To ensure compatibility, the physical features of the site and the character and style of any surrounding building(s) should be observed and documented by the design team. Colors, textures, and forms of existing buildings or other site features must be considered when developing elevations for new construction. Elevations should be developed on the basis of functional relationships and requirements and, where possible, should take advantage of existing and developed site assets.

D.2.1 Exterior Building Materials: Exterior cladding must meet engineering standards with respect to the environment, energy use, materials, and methods of construction. In selecting building materials, careful consideration must be given to all technical criteria and the requirement for high durability and minimal maintenance.

D.2.1.1 Exterior Elements: Mechanical, electrical, transportation, and equipment items that are located along the exterior of the facility should be integrated into the design wherever possible. These elements include air intake/exhaust vents, exterior lights, utility connections, plumbing vents, fuel tank vents, liquid oxygen tanks, transformers, trash compactors, containers, and loading docks.

D.2.1.2 Wall Thickness: Placement of the wall in relation to the structure impacts the construction cost, fenestration shading, exterior materials, thermal performance, and method of assembly. Careful consideration must be given during the design process to developing the optimum wall thickness that satisfies the above elements in the most cost-effective manner.

D.2.1.3 Design Characteristics: The design characteristics of wall schemes should be evaluated for aesthetics, functionality, and cost-effectiveness, since their characteristics relate to the following:

- Exterior wall termination at the roof or the top of parapet walls (including penthouses).
- Construction and control joint locations, considering their impact on sterile areas, construction sequence, and building movement due to expansion and contraction.
- Corner conditions, especially material relationships at the intersections of vertical planes and the continuity of wall supports and flashings.
- Load transfer of the wall to the structure, including consideration of structural frame exposure and lateral wall supports.
- Watertight design, including sealant profiles, material adjacencies, and flashing configuration.
- Window placement relative to the wall, secondary connection requirements, material adjacencies, window-washing, glass type and thickness, and life safety hardware.

D.2.1.4 Thermal Resistance: The thermal characteristics of single materials or wall assemblies shall be obtained from the American Society of Heating, Refrigerating

and Air-Conditioning Engineers (ASHRAE) *Handbook of Fundamentals* or from manufacturers' certified technical information. Thermal resistance (R) values shall be identified for each element in the building shell. "U" factor calculations shall be prepared following recommended procedures as documented in the ASHRAE *Handbook of Fundamentals*.

D.2.1.5 Moisture Migration: All new construction and projects that substantially alter the building envelope shall be designed to prevent moisture migration and condensation of water vapor within the envelope assembly. Moisture decreases insulation performance and can be a contributing factor to structural deterioration. Designs must incorporate the principles of the ASHRAE *Handbook of Fundamentals* chapter titled "Moisture in Building Construction." Dew point calculations shall be prepared following recommended design procedures in the ASHRAE *Handbook of Fundamentals*. Dew point consideration will determine where condensation will occur within the wall assembly and what problems will be generated by its presence at specific points during freeze-thaw cycles. A vapor drive analysis shall also be provided.

D.2.2 Exterior Wall Compositions: Exterior wall compositions should be based on durability, thermal performance, vapor barrier requirements, and aesthetic requirements as they relate to the campus environment, cost, and, in some cases, historic considerations.

D.2.2.1 Masonry: Design and construction shall be based on standards, specifications, and publications for the products selected, including those by the American Society for Testing and Materials (ASTM), American Concrete Institute (ACI), Building Stone Institute, Indiana Limestone Institute of America, Marble Institute of America, National Building Granite Quarries Association, National Concrete Masonry Association, Brick Industry Association, and Portland Cement Association.

D.2.2.2 Curtain Walls: Design and construction shall be based on standards, specifications, and publications for the products selected, including those by the ASTM, American National Standards Institute (ANSI), Aluminum Association (AA), American Architectural Manufacturers Association (AAMA), ACI, Metal Lath/Steel Framing Association, National Association of Architectural Metal Manufacturers, National Concrete Masonry Association, National Precast Concrete Association,

Portland Cement Association, Precast Concrete Institute, and Brick Industry Association.

D.2.2.3 Brick Selection Committee: The NIH has a review committee called the Brick Selection Committee, which reviews project brick panels for their match to existing brickwork. The Project Officer is responsible for ensuring that the requirements in the Brick Selection Committee Guidelines are incorporated into the project drawings and specifications. For construction of new buildings, the Project Officer shall consult with the Brick Selection Committee and the NIH Master Planner early in the design process when brick is proposed.

D.2.3 Windows and Glazing: Appearance, function, heat gain and loss, air infiltration, safety, structural requirements, suitability for the environment, operation and maintenance experience, and life-cycle cost should be considered when selecting windows, doors, skylights, and glazing. Stock sizes should be used to the maximum extent practicable.

D.2.3.1 Thermal Performance of Windows, Exterior Doors, Glazed Panels, and Skylights: The use of glass must be carefully studied in relation to energy conservation goals and building function. Additional requirements are provided in General Design Guidelines, Section: Sustainable Design. All new windows, glazed exterior doors, glazed panels, and skylights shall be double-glazed with a continuous thermal break. Condensation should not be apparent on glass when the indoor design temperature is 22 °C at 30 percent relative humidity. All windows, glazed exterior doors, glazed panels, and skylights should have energy performance rating factors as evaluated in accordance with the National Fenestration Rating Council (NFRC) procedures to minimize air infiltration. The following average unit performance factors apply to NIH facilities:

***NIH Campus, Bethesda, Maryland, Including Surrounding Areas, and Raleigh-Durham, North Carolina, Facilities*:** Thermal performance for windows, glazed exterior doors, and glazed panels should be 2.271 W/(m^2 K) (0.40 U). Thermal performance for skylights should be 2.555 W/(m^2 K) (0.45 U). Solar heat gain for all fenestration types should be 3.123 W/(m^2 K) (0.55 U). Products with a higher visible transmittance to maximize daylight and view should be selected.

Hamilton, Montana, Facilities: Thermal performance for windows, glazed exterior doors, and glazed panels should be 1.987 W/(m^2 K) (0.35 U). Thermal performance

for skylights should be 2.555 W/(m^2 K) (0.45 U). Solar heat gain is not applicable. Products with a higher visible transmittance to maximize daylight and view should be selected.

D.2.3.2 Windows: Fenestration shall be designed considering NFPA codes, heating, ventilation, and air-conditioning requirements, aesthetic appearance, and the comfort of all users of the facility. Window design and construction should be based on the standards, guidelines, and publications of the ASTM, ANSI, AA, American Architectural Manufacturers Association, National Institute of Standards and Technology (NIST), and Steel Window Institute.

D.2.3.2.1 Provisions for Window Cleaning: The need for window cleaning and maintenance, including replacement of glazing, shall be considered during design. Provisions for window-cleaning equipment must be included in the design for all facilities.

D.2.3.2.2 Operable Windows: Operable windows are not permitted in NIH research laboratory and animal research facility buildings. The use of operable windows may be evaluated on the basis of building function, quality of life, and code-related issues in other building types. Operable windows may be considered only when they offer the potential for significant energy savings by using natural ventilation, when they do not compromise the mechanical system design, and when the use of natural ventilation can be seamlessly integrated with the HVAC system design. Project documentation shall substantiate any proposal to use operable windows.

D.2.3.2.3 Windows for Historic Buildings: Projects affecting windows of historic buildings shall be guided by the Secretary of the Interior's *Standards for Rehabilitation and Guidelines for Rehabilitating Historic Buildings.* Prior to designing replacements of windows in historic buildings, the Project Officer shall consult with the NIH Federal Preservation Officer.

D.2.3.3 Glazing: Glazing for windows, doors, glazed panels, skylights, and curtain walls shall meet the requirements for energy conservation identified in General Design Guidelines, Section: Sustainable Design. All glazing designs should be evaluated for aesthetics, building function, energy conservation goals, shading characteristics, light transmittance, thermal characteristics, and reflectance. Low-emissivity (low-E) insulating glass shall be used unless other glazing types are shown to be more cost-effective. Care must be taken to evaluate each building

elevation individually. Glass sizes and thickness shall be based on wind loading and thermal conditions of the geographic area where the building is located.

D.2.3.3.1 Glazing for Impact Safety: Because of the size and shape of glazing in some locations, glass panels may be mistaken for a means of entry or exit and therefore may be subject to human impact. The requirements of ANSI Standard Z97.1, NFPA 80, and NFPA 101 shall be followed. Sill heights less than 760 mm above the finished floor must have an intermediate horizontal mullion, or suitable alternative, included in the fenestration or design at that height. If laminated glass is required for double-glazed windows with a sill/stool less than 2 000 mm above the finished floor (AFF) and for windows facing a courtyard, a laminated glass interior pane and tempered glass exterior pane shall be provided. If laminated glass is required for double-glazed windows, it shall be provided for interior panes only.

D.2.4 Roofing: Roofing systems shall be compatible with structural framing systems and provide a complete, readily repairable, waterproof assembly. The system should be durable and require minimal maintenance and must provide the fire ratings and classifications required. Warranties shall be provided for various types of roof systems based on specific NIH input during design. Roofing systems shall be designed in accordance with the recommendations of the National Roofing Contractors Association *Roofing and Waterproofing Manual*, Factory Mutual Guidelines, ASTM Specifications and Tests and Methods, NIST, and Underwriters Laboratories. On all new construction, the roofing system shall be designed for resistance to wind uplift forces.

The use of roof penetrations should be minimized to the greatest extent possible. Penetrations shall not be installed in valleys or near drains or scuppers. When roof-mounted equipment is used, the equipment should provide the lowest profiles for the application used. The supports shall be designed for the equipment size and weight, for ease of a complete re-roofing process without disturbing the equipment, and for construction in a manner so as not to violate the waterproof integrity of the roofing materials. All roofs shall be designed with a positive slope to roof drains or gutters. Roof slope shall not be less than 21 mm/m. Consideration for future vertical expansion of the building should be incorporated in the roofing design on a project-by-project basis. All roofs shall provide for emergency overflow through the use of scuppers.

D.3 Structural Considerations

D.3.1 Exterior Walls Faced With Brick: If a building façade will be faced with brick or concrete masonry facing units, the preferred backup across the cavity is concrete masonry units (CMUs). If cost/benefit analysis indicates substantial savings by using metal studs, utilize Brick Industry Association standards for wall durability. Anchorage of the brick facing shall be designed so as not to be subject to corrosion at the fastener-to-metal-stud location. Ensure that the wall will not flex when subjected to location-indicated wind loads.

D.3.1.1 Expansion Joints: Horizontal and vertical expansion joints and relieving angles for cavity wall face brick shall be located, sized, and detailed in accordance with the recommendations of the Brick Industry Association. In addition to the Brick Industry Association recommendations, buildings constructed of steel or concrete framing must have a horizontal relieving angle at each floor. Bearing-wall buildings three stories or shorter may not require horizontal relieving angles depending on total building height. If relieving angles are required, one shall be provided at each floor. Use rabbeted brick made with a lip to conceal the horizontal leg of the relieving angle or lintel angle.

D.3.2 Drywall Interior Partitions: Where metal-stud and drywall partitions are acceptable for use, studs of at least 0.91 mm metal gauge, 90 mm in depth, and spaced at 400 mm on-center shall receive first consideration for use. Where NFPA standards and construction drawings permit stopping full height partitions at the ceiling suspension system, provide lateral bracing at the top of all partitions that exceed 2 850 mm in height. Partitions of lesser overall height shall be securely anchored to a stable ceiling suspension system. Fasten the top track of the stud system to the ceiling suspension components at 600 mm on-center with #12 self-cutting screws. For partitions exceeding 2 850 mm, provide lateral bracing at a 45 to 60 degree angle above the ceiling at a maximum spacing of 1 800 mm. For a brace length of up to 1 800 mm, provide a 30 mm x 30 mm x 3 mm steel angle. Bracing locations must be coordinated, prior to installation, with all other items and services that will be located above the ceiling.

To provide greater flexibility for future installations of wall-hung shelves, bookcases, and cabinetry, provide internal reinforcing when the partitions are constructed. Provide 100 mm-wide, at least 1.33 mm metal gauge sheet-metal strips, placed horizontally on both sides of the studs for the full length of the partition. Anchor the

strips to each stud with two #12 screws. Install the top edge of these metal strips at the following heights:

- 150 mm and 300 mm above the finished floor to provide a fastening opportunity for vertical-support standards for the utility ledge.
- 765 mm above the finished floor to provide a fastening opportunity to anchor the steel angle at the back edge of the seated height countertops.
- 1 000 mm above the finished floor to provide a fastening opportunity to anchor the steel angle at the back edge of the standing height countertops.
- 1 200 mm above the floor to provide a fastening opportunity to anchor the wire mold.
- 1 700 mm above the floor to provide a fastening opportunity for the bottom angle that supports wall cabinets. This assumes that the bottom of the 800 mm-tall wall cabinets will be located 1 725 mm above the floor, and the cabinets will be supported as described in the Anchorage of Shelving and Wall Cabinets paragraph below. This location also allows shelf-bracket vertical-support standards to be anchored when it is not possible to anchor them to metal studs.
- 2 500 mm above the floor to provide a fastening opportunity to anchor the steel angle at the top of the 800 mm-tall wall cabinets. This location also allows shelf-bracket vertical-support standards to be anchored when it is not possible to anchor them to metal studs.

The designer must verify that the above assumptions agree with program requirements and the casework or shelving system proposed. Mounting dimensions shall be adjusted accordingly to coordinate with the systems proposed. At a minimum, provide the general reinforcing layout referenced above to accommodate current and future installations. Because fastening to wire studs in partitions is very difficult, they **shall not** be used for any NIH projects.

D.3.3 Anchorage of Shelving and Wall Cabinets: The following requirements apply to installation of shelving and wall cabinets on drywall-faced metal stud partition systems only.

D.3.3.1 Anchorage of Shelving: Anchorage of vertical standards carrying shelving brackets shall be capable of safely carrying a fully loaded wall of shelving. A fully loaded wall of shelving consists of a top shelf no higher than 2 300 mm above the floor with shelves spaced 330 mm apart below the top shelf all the way to the floor or countertop. Each shelf must be capable of supporting a minimum design load of

3.8 kg per 100 mm of shelf length. A fully loaded wall assumes all shelves are loaded to capacity. Anchorage for shelving carrying equipment that exceeds the 3.8 kg per 100 mm of shelf length loading must be designed for the specific application.

D.3.3.2 Anchorage of Cabinets: The construction drawings must indicate how wall cabinets and base cabinets will be attached to the partitions. Cabinet installation must be in accordance with the manufacturer's recommendations. Where cabinets with backs and a hidden 20 mm recess are used, a satisfactory mounting method is to provide solid or slotted 40 x 65 mm horizontal steel angles, minimum 1.9 mm metal gauge. The angles are installed with the long legs vertical and with the short leg projecting from the wall to support the cabinet. The bottom angle is installed with the long leg directed up (to be hidden behind the cabinet) and is anchored to every metal wall stud with washers and two #12 metal-cutting screws, such as Hilti Metal-to-Metal #4 Point #12-24x2 HWH #4 STLG screws having 40 mm of thread length. The top angle, with the long leg directed down, is placed at the level of the top of the wall cabinet, and the vertical leg is anchored to the studs in the same manner as indicated above. The cabinet is slipped between the two angles, and #12 screws at 300 mm on-center are screwed downward 300 mm from the back of the cabinet into the hidden cabinet recess to anchor the top of the cabinet to the angle. Similarly, from underneath, #12 screws at 300 mm on-center are screwed upward 10 mm from the back of the cabinet into the hidden cabinet recess to anchor the bottom of the cabinet to the angle.

D.3.4 Wood Shelving (Lumber and Facing Materials): Shelves provided within NIH facilities should be either exposed solid wood or plastic laminate-faced. Strength-equivalent wood composed of shorter lengths of the species that is finger-jointed to make a board is acceptable when they have faces that are equal to B and better – 1 and 2 Clear. Other core and facing materials may be required for specialized applications.

D.3.4.1 Exposed Solid Wood Shelving Lumber: Lumber shall meet or exceed the Western Lumber Grading Rules as published by the Western Wood Products Association, Portland, Oregon, latest edition, modified as indicated below. Lumber shelving shall be chosen from the following species:

- Ponderosa pine
- Sugar pine

- Idaho white pine (choice)
- Engelmann spruce
- Alpine fir
- Lodgepole pine
- Douglas fir

Shelving material shall be “C Select” or better grade, 32 mm nominal thickness by 300 mm nominal width, surfaced four sides to 32 mm thick (+1.5 mm, -3.0 mm) by 285 mm wide (+1.5 mm, -3.0 mm) by 3 000 mm and longer. Four edges shall be eased (rounded) full length, or two edges of one narrow side, full length.

Grading rules for the above Exposed Solid Wood Shelving Lumber species (“Characteristics and Limiting Provisions,” for a 3 000 mm length) are:

Medium stained wood in an occasional piece covering one-third of the face.

- Small, well-scattered seasoning checks on the surface
- Very light torn or raised grain
- Light skip on one edge
- Very light cup

Any one of the following characteristics:

- Two small, sound, tight knots
- A small pitch streak
- Two very small pockets

D.3.4.2 Plastic Laminate-Faced (PLF) Shelves: Plastic laminate-faced shelves shall be constructed of a core material that is a minimum of 30 mm thick. Shelving shall be faced on all sides and edge banded, including concealed edges. Core material should be high-density fiberboard or other suitable core material for the intended size and purpose.

D.3.4.3 Shelving Support Spacing: 30 mm solid wood and 30 mm plastic laminate-faced shelves shall be supported to a maximum of 1 200 mm spacing. Cantilevered shelves shall be limited to spans of 300 mm.

D.3.5 Wall-Mounted and Peninsula Shelving: The typical depth of shelves is 305 mm. Shelving depths may not exceed 450 mm. Depths greater than 305 mm are permitted providing the shelf support spacing is designed for the increased depth. In no case shall the spacing between vertical supports exceed 1 200 mm. The cantilevered distance between the last support and the end of the shelf shall be no greater than 305 mm. Staggered-depth shelves (top shelf deeper than lower shelves) are permitted. Fire sprinkler placement relative to shelving must be in accordance with criteria contained in General Design Guidelines, Section: Fire Protection. These design standards also apply to shelving installed as a component of a laboratory casework system.

For maximum mounting heights of shelving and required clearances between shelving and sprinkler heads, see General Design Guidelines, Section: Fire Protection.

D.3.6 Selection and Use of Anchors: A variety of anchor types are indicated for use in various applications.

D.3.6.1 Metal Expansion Anchors: This type of anchor consists of a stud with a steel sleeve that expands when the nut is tightened. It must be used in a solid concrete substrate meeting the manufacturer's minimum thickness. Install anchors in accordance with the manufacturer's instructions. Fastener spacing, embedment, edge distance, and strength of the concrete substrate must be considered. Equipment and drill bits provided by the manufacturer or recommended by the manufacturer must be used. Holes shall be drilled with sharp, carbide-tipped drill bits. Drill bits must be changed frequently enough to ensure that accurate-diameter holes are drilled. If reinforcing bars are encountered while drilling, a new hole must be drilled in a different location. Do not cut existing reinforcing without first consulting the structural engineer for the project.

D.3.6.2 Adhesive Anchors in a Solid Base Substrate: This type of anchor consists of a steel stud that is chemically bonded to the base material. It must be used in a solid concrete substrate and installed in accordance with the manufacturer's printed instructions. A properly sized hole is drilled in the concrete, and a measured amount of adhesive, such as epoxy or vinylester resin, is inserted, followed by the steel stud. Load can be applied after the adhesive sets, chemically bonding the anchor to the concrete. Fastener spacing, embedment, edge distance, exposure to chemicals, fatigue loading, and strength of the concrete substrate must be taken into account.

Equipment and drill bits provided or recommended by the manufacturer shall be used.

D.3.6.3 Screen-Tube Adhesive Anchors in a Hollow-Base Substrate: This type of anchor consists of a steel stud that is keyed into hollow base material such as CMUs and installed in accordance with the manufacturer's printed instructions. A properly sized hole is drilled into the CMU, and a screen tube is inserted into the hole and filled with adhesive, followed by the steel stud. The stud forces the adhesive out of the screen tube, keying the anchor into the CMU face shell.

D.3.6.4 Anchors With Plastic Sleeves Expanded by Sheet Metal Screws: These anchors depend upon a screw expanding a plastic sleeve against the sides of a hole. These anchors are often used to attach items with a weight no greater than 4.5 kg to a masonry substrate. Greater loads will cause the screw to deform the plastic anchor and release the load. Anchors with plastic sleeves expanded by sheet metal screws shall not be used to anchor shelving, shelving standards, or cabinets to walls.

D.3.6.5 Metal-Impact Expansion Anchors: These anchors rely on an accurately sized hole, placement of the anchor (composed of a sleeve and a nail), and a hit with a hammer to make the nail expand the sleeve against the sides of the hole. These anchors shall not be used in a tension-loading condition, as they will slide out of the sleeve. These anchors are approved only for 4.5 kg maximum shear loads.

D.3.6.6 Toggle Bolts: Toggle bolts rely on a spring-loaded or expanding part to key the anchor to the back of a hollow wall or ceiling. Toggle bolts may be used to attach items to hollow CMU units, assuming a 9 kg maximum load per toggle bolt. Toggle bolts shall not be used as structural fasteners in drywall, as they are not designed to provide structural restraint for anchors against pullout or shear.

D.4 Interior Elements

D.4.1 Finishes and Materials: The interior design for a facility should be developed as a complete and coordinated part of the building design, expressing both the functional and aesthetic needs of the user. Finish materials are what the user and visitor sees, touches, and walks on and therefore produce an immediate impact. All interior components and their related construction details, finishes, and products shall be based on the anticipated use, engineering limitations, fire and other health and safety requirements, applicable codes and regulations, life-cycle costs,

housekeeping and maintenance costs, durability, aseptic characteristics, and the appropriateness of the particular material or combination of materials to the environment being created.

Color selection is an important element of the building's interior and exterior design. Color selection should be coordinated with the quality and quantity of light provided in each space. Colors and patterns should be selected with regard to their effect on the maintainability and function of the space as well as their impact on the health and welfare of the people who will be using the space. The range of interior and exterior colors should be made from a limited palette to facilitate maintenance and coordinate with all finishes, furnishings, and accessories. Lighter colors with improved light reflectivity characteristics should be used to the greatest extent possible to improve functional lighting levels. Matte surface finishes should be provided where glare from a high-gloss finish would be functionally disruptive. Color selections shall be made by the designer and incorporated and coordinated throughout the contract documents for the project.

The interior designer is required to make selections of finishes, materials, furniture, and products from the General Services Administration (GSA) Federal Supply Schedule. Current GSA contract schedules must be verified with each manufacturer prior to specifying items. The designer must consider the expiration dates of those contracts to ensure availability of the product at the anticipated time when product ordering is to occur. Contract documents shall be developed to require a submittal of all manufacturer's information about the installation instructions, flammability ratings, static and acoustic characteristics, and recommended maintenance and stain-removal techniques for all interior finishes and materials.

D.4.2 Floors: Floors shall be designed to accommodate different types of wheeled conveyances and shall be devoid of abrupt changes in elevation. Avoid raised thresholds, steps, and ramps. Recess all expansion joint cover plates flush with the finished floor. Provide floor depressions to accommodate specialized equipment including, but not limited to, cart and tunnel washers, floor loading sterilizers, walk-in refrigerators and freezers, controlled-temperature rooms, computer rooms, high-density shelving, and other embedded equipment. Consideration must be given to radiographic electrical floor ducts. In developing a finish schedule for floor coverings, the interior designer's selections should be influenced by an understanding of the specific use of the particular area. It is important that selections strike a balance among functional, aesthetic, and related cost requirements. Other design

considerations must include observation of existing wear and/or damage patterns, the kind of equipment to be used in the area, the effect of wheelchairs, walkers, canes, and crutches, and the necessity for biological levels of sanitation.

Floor flatness (F_F) and floor levelness (F_L) numbers shall be specified when the installations of finish materials, functional conditions, or equipment dictate tight control of concrete slab substrates.

Additional information is provided below for materials requiring specific guidance.

D.4.2.1 Carpet: The carpet assembly (modular tile or broadloom carpet and padding) must comply with all flammability requirements outlined in applicable codes. The quality of carpet proposed for a facility must be based on several factors, including resistance to wear, soiling, and staining. When carpet is used in corridors adjacent to building entrances, walk-off mats shall be provided to extend the life of the carpet installation. Carpet colors should be chosen for their ability to mask soiling to prolong the carpet's appearance. Small irregular patterns and tweeds help mask soiling. Avoid using geometric patterns in high-traffic areas such as corridors, as these designs may emphasize soiling patterns. Carpet shall also be selected on the basis of the requirements necessary to comply with accessibility guidelines.

Carpet should not be provided in personnel break areas and food preparation areas. While the use of carpet is discouraged in food consumption areas, its aesthetic and acoustical benefits shall be evaluated against sanitation requirements before it is selected for use. If selected for food consumption areas, specify antimicrobial compositions.

D.4.2.2 Resinous Epoxy Flooring Materials: A water vapor transmission test is required for all projects at the NIH prior to installing resinous epoxy flooring materials to **any** concrete substrate. The moisture test shall follow the procedures outlined in ASTM F 1869 *Standard Test Method for Measuring Moisture Vapor Emission Rate in Concrete Subfloor Using Anhydrous Calcium Chloride*. Concrete substrates shall have a maximum moisture-vapor emission rate of 1.36 kg of water per 92.9 m^2 in 24 hours, unless otherwise recommended by the flooring manufacturer prior to the installation of any epoxy flooring materials. Substrate preparation and testing requirements are further outlined in NIH Division 9 Specification Section: "Resinous Flooring."

D.4.2.3 Slip-Resistant Surfaces: In addition to code requirements to provide slip-resistant ground and floor surfaces, provide slip-resistant floor surfaces in all shower stalls. Slip-resistant floor surfaces should also be provided in all locations where the floor is subject to moisture or water.

D.4.3 Wall Treatments: Selection of wall treatments shall be based on the functional use and purpose of the area, as well as any infection control and chemical resistance requirements. The selection of materials and finishes shall create a non-institutional appearance. Sound control and acoustical properties within the area shall be considered when material selection is made. All materials must conform to applicable codes and standards.

D.4.3.1 Fabric Finish Materials: All interior fabric finish materials shall be selected from major fabric sources and must be fire retardant or chemically treated for fire resistance.

D.4.3.2 Wall Coverings: There shall be no double hanging of wall coverings. The designer shall inspect the substrate to determine the need for any liners or other appropriate treatment to the substrate prior to the installation of the wall finish, and include appropriate requirements in the contract documents. Edge beads shall be provided where needed.

D.4.3.3 Multicolored Paint Coatings: The use of multicolored paint coatings may be more cost-effective than wall coverings and can enhance maintenance. The designer must consider the area to which they are to be applied, since these coatings often contain volatile organic compound bases that require special installation methods. Adequate ventilation must be provided during installation and during the cure period. The designer must also consider the ease with which touchup can be done and whether the area is subject to high traffic and/or abuse before selecting this finish.

D.4.4 Ceiling Treatments: Ceiling treatments should be evaluated by the designer considering initial cost, accessibility, acoustics, resistance to moisture, fire-resistance rating, aesthetics, security, and maintenance. Coordination with lighting fixtures, access panels, sprinklers, diffusers, and fire alarm devices shall be considered during design.

D.4.4.1 Lay-in ceiling tile: Unless otherwise stated, all ceiling tiles shall be the NIH standard. Lay out ceiling tiles symmetrically so that tiles and grid members retain modular dimensions. The ceiling surface shall not be used for the direct support of anything. All ceiling-mounted items shall be secured through the ceiling to secondary support members. Heavy equipment and equipment tracks shall be securely suspended from independent structural assemblies attached directly to the structural floor and framing members overhead. When acoustic treatment is required in the presence of high levels of moisture, Mylar-faced acoustic tiles shall be used. Maximum accessibility in corridor ceilings to the mechanical and electrical distribution systems above shall be provided. Do not use concealed-spline ceiling systems requiring special tools to lower tile assemblies. Access panels into ceiling plenums shall be color-coded with tabs to identify the type of utility present.

D.4.5 Window Treatments: A window treatment is an important element in the overall design solution. Successful window treatment choices must satisfy both functional and aesthetic requirements for the space. Draperies and blinds are acceptable choices for interior window treatments. During predesign programming, the interior designer must be involved with the project development to determine the types of window treatments necessary. Elements such as the direction of the source of natural light; the effects of natural light on the user throughout the day; requirements for filtering, blocking, or redirecting light; the effect of natural light in fading of fabrics; the requirements for use of a video monitor, and so on must be considered. Drapery and window treatments shall be coordinated with heating and air conditioning to avoid interference with designed airflows.

D.4.5.1 Drapery Fabric: To standardize and reduce the number of drapery fabrics, the designer shall select no more than two neutrals per building. For existing buildings, standardization is an ongoing process. The designer must coordinate proposed fabrics with those existing within the building in areas being renovated. The Project Officer will provide information on existing fabrics before final selection is made. Drapery fabrics are available on GSA Federal Supply Schedules. The designer must select from current products available on GSA schedules and consider contract expiration dates in anticipation of future ordering dates.

D.4.5.2 Blinds: Aluminum blinds may also be used as an interior window treatment. Blind slat depth shall be coordinated with the window frame profile when inside mount units are planned. Neutral colors (black, beige, brushed aluminum, etc.) that will not stand out when viewed from the exterior of the building are preferred to

colors that complement the interior palette. On new buildings, one color shall be used throughout the building. Windows with integral blinds should be evaluated in addition to the installation of interior-mounted blinds.

D.4.6 Vision Panels (Lites) in Doors: Vision panels should be provided in all doors where someone could be struck by a door opened suddenly from the opposite side. Specifically, all doors crossing corridors or enclosing stairways shall be provided with vision panels. Individual offices, laboratories, or spaces where privacy may be needed do not require vision panels but may have translucent glass panels to admit light without permitting vision. Other spaces may have vision panels when coordinated with user requirements. Vision panels shall not be provided in doors to toilets, bedrooms, and examination rooms. There is usually no limit to the size of a vision panel in a door unless it is a rated fire or smoke-barrier door. In rated fire and smoke-barrier doors, vision panel size, placement, and glazing materials are required to comply with minimum NFPA requirements.

The dimension from the latch edge of the door to the nearest edge of the vision panel shall comply with minimum NFPA requirements, regardless of whether the door is required to be fire/smoke rated or not. These measurements are to the visible glass edge and not to the edge of the opening, which is cut in the door. In the case where the door with a vision panel is limited in size to 64 500 mm^2, a 100 by 645 mm vision panel shall be used. Where panic hardware is installed on a door and the lower edge of the vision panel is below the mounting height of the panic hardware, glass shall be safety glazed.

D.4.7 Room Numbering, Interior Signage, and Graphics: The ORF Division of Facilities Planning (DFP) determines the room-numbering system for the identification of all spaces. This room-numbering system must be incorporated into the design beginning in the design development phases so that all components are coordinated with the building's final room numbers. The architect/engineer (A/E) shall coordinate with the DFP to obtain guidance on the room-numbering system and shall submit plans to DFP for review and approval prior to the beginning of construction documents.

D.4.7.1 Signage: All interior signage shall comply with guidelines as defined in the NIH *Interior Signage Users Manual.* Interior signage and artwork in Building 10 shall coordinate with the Clinical Center Art and Signage Program. All interior and exterior

signage shall comply with the Americans with Disabilities Act Accessibility Guidelines (ADAAG).

D.5 Equipment and Furnishings

Equipment plans shall be developed as a building system and shall be integrated with the planning of architectural, structural, mechanical, and electrical systems. Equipment shall be arranged and organized so as to provide adequate circulation, workflow, and maintenance clearances.

D.5.1 Laboratory Casework: Basic components of built-in, fixed casework shall follow the NIH Laboratory Casework Specifications, which are available from the NIH Project Officer. To facilitate reconfigurations of casework and functional areas, casework layouts should consider a combination of fixed and moveable/modular components. This combination of casework systems simplifies and facilitates reconfigurations in the future.

D.5.2 Workstations: In addition to following standard design procedures for product and component selection, particular attention shall be paid to providing supplementary space outside the workstations for general, shared use (i.e., conference, library, fax, copier, or other related equipment). All power, telephone, and computer outlets shall be provided well in advance of the furniture installation to give technical installers time to provide necessary services. Installation followup by the designer is vital to the overall success of the project. Documentation must include, but is not limited to, scaled drawings that indicate panel and component locations, accessories, and a seating and component list of parts. This is necessary for future reconfiguration of workstations.

The interior designer must coordinate design decisions with A/Es of the design team to resolve such issues as telephone, electrical, local area networks, and ventilation. It is recommended that systems workstation design be in generic form since procurement regulations presently require presentation to Unicor (Federal Prisons Industry) for its review, production, or waiver.

D.5.2.1 Interior Finish Requirements for Prefabricated Furniture Panels: The flame spread requirements of the NFPA *Life Safety Code®* are to be applied to prefabricated panel furniture systems when such panels are ceiling high or extend sufficiently close to the ceiling so that the larger space divided by the panels is

considered to be multiple rooms. The flame spread requirements of the NFPA *Life Safety Code*® are not to be applied to prefabricated panel furniture systems when the top of the panels is greater than 450 mm from the finished ceiling. The application of flame spread requirements to prefabricated furniture panels does not override any requirements concerning the combustibility of the panels as may be governed by other standards.

D.5.3 Catalog Cut Sheets and Equipment Groups: A catalog cut sheet shall be provided for all items of equipment having a logistical grouping of 1 and for any Group 2 and 3 items having unique utility requirements and structural support or space requirements. The following are definitions of equipment by logistical groupings:

Group 1: Contractor furnished, contractor installed
Group 2: Government furnished, contractor installed
Group 3: Government furnished, government installed
Group 4: Movable equipment and furnishings

D.5.4 Layout and Clearances: Equipment shall be arranged to provide service clearances and maintenance access with minimum disruption to work spaces. When expansion is anticipated in a project, the designer shall allow for the addition of equipment without disruption or reconfiguration of workflow in the layout of sterilizing and sanitizing equipment spaces, or any other spaces affected by the addition.

D.5.5 Floor Preparation: Floor depressions shall be provided to accommodate cart washers, floor-loading sterilizers, radiographic electrical raceways, environmentally controlled room equipment, walk-in refrigerators, audiometric suites, computer rooms, high-density shelving, and any other appropriate space except in laboratory spaces where future flexibility is a requirement.

D.5.6 Structural Support: Wall-partitioning systems shall be adequately reinforced for the installation of all wall-hung fixtures and equipment such as toilet accessories, physical therapy equipment, radiographic equipment, and hanging supply carts. All fixed equipment shall be mounted to resist seismic forces in accordance with seismic criteria for the region in which the project is being constructed.

D.5.7 Recessed Equipment: Where sanitation or aseptic requirements dictate, equipment shall be flush, wall-recessed, or through-wall types to the greatest extent possible.

D.5.8 Special Ventilation Requirements for Equipment: Control of ventilation for employee working environments must be provided in accordance with the latest edition of the Occupational Safety and Health Act of 1970. Dust and debris collection systems shall be provided for locations where dust and debris are generated. Exterior air supply, exhaust with filtration, and dust containers must be provided.

D.5.9 Equipment Specifications: The A/E shall develop equipment specifications for all equipment to be procured for the project. Where an NIH Specification Section is available, it shall be tailored into a project-specific section. All equipment specifications should permit procurement of the latest model of equipment from manufacturers through GSA contracts to the greatest extent possible. Specifications should indicate that the manufacturer has a minimum appropriate level of production experience to preclude the procurement of equipment with untested technologies. Equipment specifications shall fully address the scope of services to be provided by all parties involved in installing government-furnished, contractor-installed equipment.

D.5.10 Sterilizing Equipment: Because of the nuances and specialties in sterilizing equipment, the use of an equipment consultant with knowledge of sterilizing equipment is recommended. Particular emphasis should be placed on the selection of ethylene oxide sterilizers because of codes and changing regulatory requirements. All proposed ethylene oxide sterilizer applications shall be discussed with, and reviewed and approved by, the NIH Division of Safety.

D.5.11 Dental Equipment: Various models of dental radiographic units require different structural wall supports. When two or more units are installed in the same room, a single control unit shall be used when feasible.

D.5.12 High-Technology Equipment: The planning for and inclusion of new or unique medical and scientific technology, such as linear accelerators, positron emission tomography, and lithotripsy, may require special consultants. The design shall be developed to reflect the equipment selection, as well as recommendations and guidance of the respective manufacturers.

D.5.13 Magnetic Resonance Imaging Facilities: The planning, design, and installation of a magnetic resonance imaging (MRI) system in a facility requires extreme care to ensure that the magnet is sufficiently isolated from ferromagnetic and radio frequency influences of the impacted environment and that the surrounding environment is isolated from the effects of the magnetic field. Selection of the proper location for the magnet is extremely important and shall be addressed in the earliest stages of planning and designing the MRI system. The specific guidance of the manufacturer of the selected equipment must be followed. Consultants should be used to verify specific requirements.

D.6 Loading Docks

For additional requirements, see General Design Guidelines, Section: Site/Civil and Section: Pest Management. For requirements specific to loading docks in animal facilities, see the Animal Research Facilities volume.

D.6.1 Circulation Into and Within Buildings From Loading Docks: If possible, circulation access from within the building to the loading docks shall not be on a required means of emergency egress to enable after-hours security of the dock area. Loading docks shall not be a primary means of personnel passage into or out of a building. The primary reason to restrict pedestrian access at the loading dock is for dock safety and security vulnerabilities present in this area. Passageways leading from the loading dock to the freight elevator should be as direct as possible. Elevator lobbies and corridors adjacent to a loading dock should include provisions for installing wall-mounted pest exclusion devices such as insect light traps. All utility services necessary for this equipment shall be provided. Passageways in areas surrounding loading docks are subject to abuse and higher levels of wear and tear, and their design must be appropriately detailed and specified. All interior surfaces must be covered with materials that facilitate proper sanitation and ease of cleaning on a regular maintenance and disinfection schedule. Sealed concrete may be appropriate in some cases, or other hard surface flooring may be considered. Resinous epoxy floors may be considered depending on the location of the dock and building function.

Passageway walls must include dual-level protective bumpers installed at not less than 210 mm above finished floor level and at a height of 765 mm above finished floor level. All outside corners in passageways leading away from loading docks must be protected with metal wall edge guards. Wall, corner, and door guards must

be of a durable type that stands up to impact (stainless steel or other metal) and thoroughly caulked and sealed when installed to prevent harborage of vermin.

D.6.2 Doors: Passageway doors must be protected with bumpers. For safety reasons, doors must include vision panels (lites) glazed with safety glazing that allows passageway users to see traffic on the opposite side of the door. All interior and exterior doors in the area of loading docks shall be constructed of fiberglass-reinforced polyester (FRP). Personnel doors and door frames must provide an effective seal, when closed, to exclude insect and rodent pests.

Loading dock overhead doors shall be equipped with proper sweeps, gaskets, and brushes to exclude insects and rodent pests around the entire perimeter of the door. Doors should be equipped with air curtains or similar devices to exclude flying insects and to create a dust and dirt barrier when the receiving or personnel doors are opened.

See NIH Design Policy and Guidelines, Volume: Animal Research Facilities, for additional requirements specific to all loading dock doors in an animal facility.

D.6.3 Freight Elevators: A freight elevator must be available for delivery of materials to NIH customers located within the building. Entrance to freight elevators should be from the materials-handling passageway, and not from the building lobby. The elevator cab finish materials shall facilitate proper sanitation and ease of cleaning. These materials must be durable enough to withstand intense industrial use and regular cleaning.

D.7 Mail Cluster Box and Drop Box Systems

D.7.1 Mail Cluster Boxes: The Division of Support Services (DSS) requires the use of mail cluster boxes in lieu of door-to-door mail services as part of all major renovation and new construction projects and as part of acquiring new lease space. These units will be used for delivery of mail to NIH customers in the building. Mail cluster boxes must be installed at a ratio of one per every 50 building occupants. Mail cluster boxes should be centralized in the building lobby but may be decentralized to a single location on each building floor when approved by the DSS. Cluster boxes must be wall-mounted, front-loading units with rear covers. Wall-mounted cluster boxes must be thoroughly secured to the building structure. Each unit must be not less than 288 mm wide, 305 mm high, and 407 mm deep. Each

cluster box must be marked with self-adhesive numbers to identify the recipient's mail stop code (MSC), which will be directed by the DSS. The construction of cluster boxes must meet or exceed U.S. Postal Service (USPS) specifications. Each cluster box door must be secured with a cylinder cam lock, each keyed individually and master-keyed for DSS use. Three keys must be provided for each cluster box. The exterior surface of cluster boxes should not detract from building aesthetics. Exceptions to style/type cluster boxes (electronic, rotary, rear loading, etc.), occupant/box ratio, and location of mail cluster boxes may be granted by DSS when thoroughly justified and warranted.

D.7.2 Mail Drop Boxes: Two secured mail drop boxes are required at each mail cluster box bank to support outgoing mail services; the first one will be used for outgoing interoffice mail, and the second for outgoing USPS official domestic and foreign mail. Drop boxes should be wall-mounted, front-loading units and have a rear cover. The interior of these mail drop boxes should be sized not less than 458 mm wide, 762 mm high, and 458 mm deep. Each drop box must have a mail slot protected with a gravity or spring-loaded flap sized not less than 381 mm wide and 102 mm high. These drop boxes must be secured with cylinder cam locks and be master-keyed (two keys required) for DSS use. Drop box construction must meet or exceed USPS specifications. At each location, one box must be marked "Interoffice Mail," and the other marked "Official Mail." The exterior surface of these drop boxes should not detract from building aesthetics.

D.8 Door Hardware

Door hardware and keying throughout NIH facilities has been standardized to the greatest extent possible to facilitate rapid changes when occupants or missions change within a building or area. For additional information related to door hardware and security, see General Design Guidelines, Section: Security.

D.8.1 Reviews of Key System: The Division of Public Safety (DPS) Locksmith Section provides specific information on the keying requirements for all NIH projects. The key system design for all projects that include new doors or projects in which hardware is being changed on existing doors must be submitted for concurrent review to the DPS Locksmith Section, the Fire Prevention Section, and the Police Branch. These organizations provide input on the extent of expansion to the NIH cardkey system and mode of operation of the fail-safe/secure doors. This

coordination must be completed prior to submitting the final hardware schedule to the Project Officer for any project.

D.8.2 Key System and Keying: Final keying requirements will be determined by the NIH locksmith and must be incorporated into the project by the A/E. The key and lock system shall be based on several levels of master keys. Grand masters and great-grand masters shall be provided for functional zones and modules. The NIH shall be provided with the following keys: 1 master key; 2 change keys per cylinder and 1 extra blank for each lock; and a minimum of 500 key blanks and key bitting chart.

D.8.2.1 Cores: Temporary construction cores shall be provided during the construction period and must be removed by the construction contractor when directed. All permanent cores shall have collars. Permanent cores and final keys shall be turned over to the Project Officer for delivery to the DPS Locksmith Section.

D.8.3 Doors (Part of a Required Means of Egress): Doors to the exterior of a building that are also used as part of a means of egress (exit) must be readily operated from the interior of the building. When security devices are to be provided on egress doors, they may be designed as “fail safe” or “fail secure.” The fail-safe mode provides for unlocking the door in the event of loss of electrical power. The fail-secure mode is used in critical areas to ensure that the door locks (secures) in the event of electrical power loss. The determination on whether the device will be fail safe or fail secure will be made by the Police Branch (Support Service Section) and Emergency Management Branch (Fire Prevention Section), Division of Public Safety, with input from the users. This also applies to doors that are part of secure boundaries for interior areas of the building. Locking hardware on exterior doors must be compatible with, or capable of being connected to, the existing NIH access control system.

D.8.3.1 Mortise Locksets and Lockset Trim: All interior doors shall be equipped with mortise locksets unless fire codes dictate otherwise. Mortise locksets shall be Series 1000, Grade 1, manufactured by Corbin Russwin or Schlage. All lockset trim shall have lever handles with a return to within 13 mm of the door face. The NIH standard lockset trim shall match the Corbin Russwin model “Newport” for all facilities except Building 10, which shall match Corbin Russwin model “Lustra.”

D.8.3.2 Lockset Cylinders: All lockset cylinders for new facilities at the NIH shall be a high-security type by Schlage or Medeco. For renovations, all locks shall be keyed into the same system used on the existing building. Key-in-knob hardware is **not** permitted at the NIH.

D.8.3.2.1 Pin: The number of pins provided in high-security cylinders will vary by manufacturer. The number of pins standard for the manufacturer shall be provided.

D.8.4 Exit Devices: All NIH facilities utilize mortise style Von Duprin exit devices throughout.

D.8.5 Closers: All NIH facilities utilize LCN closers throughout.

E. Structural

E.1 General References

During the planning and design phase, the most cost-effective, functional, and aesthetic structural design should be developed. NIH campus buildings should meet all current building codes and ordinances. These include, but are not limited to, the latest editions of the following:

- *International Building Code*, International Code Council, 5203 Leesburg Pike, Suite 708, Falls Church, VA 22041-3401
- *Building Code Requirements for Reinforced Concrete*, ACI 318, American Concrete Institute, Detroit, MI
- *Manual of Steel Construction ASD*, American Institute of Steel Construction, Chicago, IL
- *Building Code Requirements for Masonry Structures*, ACI 530; and *Specifications for Masonry Structures*, ACI 530.1, American Concrete Institute, Detroit, MI
- *Minimum Design Loads for Buildings and Other Structures*, ASCE 7, American Society of Civil Engineers, New York, NY
- *National Design Specification for Wood Construction*; and *National Design Specification Supplement*, American Forest and Paper Association/American Wood Council, Washington, DC

E.2 Load Requirements

E.2.1 Live Loads: Floor design live loads should be simplified to accommodate future load occupancy changes. Generalized live load categories should be applied to large areas; preferably one category to any one floor. Indicate the design live loads on all structural plans. For renovation projects, the live loads of adjacent existing areas should be noted on the structural plans to aid the contractor in determining construction live loads in staging areas or areas to be accessed during construction or demolition. Specialized equipment loads and requirements should be verified with the equipment manufacturer.

The following minimum live loads should be used except where higher loads for specific projects are required to meet program requirements.

Table E.2.1 Minimum Loads

Space	Minimum Live Load (kPa)
Laboratories	5
Animal research facility	5
Animal research facility with primates	6
Offices	5
Mechanical areas (or weight of actual equipment if greater)	7.5
Catwalks (exclusive walking surfaces; no other weight carrying on this surface)	2
Patient rooms	5
Operating rooms	5
Nursing areas	5
Libraries	7.5-15
Storage rooms	7.5
Standard file rooms	7.5
High-density file rooms	15
Stationary x-ray film files	12
Rolling x-ray film files	20
Fitness center, recreation	7.5
Conference rooms	6
Reception lobby areas	6
Kitchen, cafeteria	5
Frozen storage, refrigeration areas	10
Mail room	10
Central computer areas	10
Visitor information and exhibit areas	10
Interstitial platform (exclusive walking surfaces; no other weight carrying on this surface)	2
Loading docks and receiving areas	12

Space	Minimum Live Load (kPa)
Roofs (not designed for future expansion)	2
Parking garage floors (shall also be capable of carrying the minimum specified concentrated live load on the designated square foot area without applying the minimum uniform live load simultaneously)	2.5
Laundry (centralized)	10
Repair and maintenance shops	7.5
Stairs, corridors	5
Toilet rooms	5
Agent cashier vault area	7.5

Ensure that the occupancy/use minimum concentrated live loads dictated in the *International Building Code* also can be met by the design.

E.2.2 Live-Load Reduction: Columns supporting a building roof level shall not be subjected to live-load reduction. For new construction, the designer may apply the *International Building Code* for live-load reduction, or the current model building code for the area, whichever contains the more stringent requirements. For the structural design evaluation of sound existing buildings for renovation and re-use, the designer may use the allowable live-load reduction allowed by the building code of the year during which the building was originally constructed, unless engineering judgment views the live-load reductions as being too liberal.

E.2.3 Wind Loads: The building shall be designed for the geographic basic wind and exposure category dictated in the *International Building Code*.

E.2.4 Seismic Loads: The building shall be designed to comply with the *International Building Code* for the seismic area in which the project is located.

E.2.5 Snow Loads: The building shall be designed for the geographic ground snow load for the area indicated by the *International Building Code*. The effects of sliding and drifting snow shall be incorporated in the design.

E.2.6 Dead Loads: The building shall be designed to support the actual weights of all materials. These include structural materials, finishes, ceilings, partitions,

shielding, piping, and ductwork. Assumed weights shall be indicated on the design documents.

E.2.7 Hanging Loads: Loads exceeding 20 kg shall not be suspended from metal decking. All ductwork, piping, and so on should be suspended directly from the structural steel framing or supplementary steel members. Loads suspended from steel joists shall be suspended from the top chords unless structural analysis is furnished that allows otherwise.

For new concrete construction, cast-in inserts should be considered for hanging items in mechanical rooms, attaching overhead lights and equipment in operating rooms, or hanging any heavy loads. For existing construction, expansion anchors shall not be used to carry significant load in tension, except with written approval of a registered professional engineer for the specific use requested. Install anchors only with drill bits and equipment recommended by the manufacturer of the anchors. Evidence should be available indicating that contractor personnel were instructed in the correct installation procedures of that manufacturer's anchors.

For plaster ceiling panels, an area of 14 m^2 shall not be exceeded without a structural separation from an adjoining panel section. Suspend loads exceeding 2 kPa independently of suspended ceiling construction.

E.2.8 Thrust Blocks: The structural engineer and the HVAC/plumbing engineers, in close coordination, should design the thrust blocks needed for the piping systems inside the building.

E.3 General Requirements

E.3.1 Future Expansion: Any specific plans for future vertical or horizontal expansion must be accommodated. Provision should be made for the addition of future floors and additions as determined by the NIH on a project-by-project basis. Future expansion plans, including assumed type of construction and live loads, should be shown on the drawings.

E.3.2 Geotechnical: A comprehensive geotechnical investigation will be required. This will include test borings in soil, and rock coring, if rock is encountered. The investigation will provide information as to the types of soil encountered, allowable bearing pressures, differential and absolute settlements, lateral soil pressures, suggested types of

foundations, water table, drainage requirements, and special foundation problems. The geotechnical report should be included in the construction documents. A geotechnical consultant should be retained to verify materials encountered during construction and monitor earthwork operations. Use of a registered geotechnical consultant in the State of Maryland, or where the project is located, is required.

E.3.3 Alternative Systems: For major new projects, a minimum of two feasible alternative structural systems should be evaluated. Provide a narrative describing the advantages and disadvantages of each system and indicate a recommended system. Include comparative cost estimates. The structural system selected should be the one that best combines overall economy with suitability of design. It must be compatible with the architectural, mechanical, electrical, and fire protection systems and accommodate vibration limitation requirements.

E.3.4 Peer Review: An independent, licensed structural engineer, if requested and contracted for by the NIH, shall perform a review of all final calculations, specifications, and drawings of the structural engineer of record.

E.3.5 Parking Garages: In addition to evaluation of at least two feasible structural systems, indicate the recommended maintenance systems and procedures to promote durability. Designs should incorporate the specification of parking garage wearing-surface systems, reinforcing materials, and concrete additives to decrease permeability and help the prevention of deterioration of the structure from de-icing salts. Life-cycle cost estimates comparing high first costs for a long-lived wearing surface to low first costs for a frequently replaced wearing surface should be included. The use of a consultant who specializes in the design of parking garages is required.

E.3.6 Loading Docks: A continuous galvanized steel angle should be embedded into the edge of the loading dock to protect the corner. A concrete apron should be constructed when paving the area adjacent to the loading dock. In addition to concrete additives designed to decrease permeability through the concrete, epoxy-coated reinforcing in the loading dock and apron concrete for protection against deterioration due to de-icing salts should be provided.

E.3.7 Vibration: Areas required to be sensitive against vibration transmission should be designed considering the effects of adjacent equipment, other sources of vibration, and operations. The use of a consultant specializing in vibration analysis and control is required for all hospital, laboratory, and animal research facility

construction for both new construction and renovations. The consultant should address issues relative to vibration-sensitive equipment and specialized functions such as nuclear magnetic resonance (NMR), neurosurgery, eye surgery, mass spectrometry, and fitness centers. Specialized equipment requirements should be verified with the equipment manufacturer.

E.3.7.1 Floor Vibration Velocity Limits for New Floor Construction: The following table indicates the recommended floor vibration velocity limits, in micrometers per second, for various sensitive space usages. The manufacturer of equipment sensitive to vibration should verify that these limits are acceptable for their equipment to work within these guideline limits.

Table E.3.7.1 Recommended Floor Vibration Velocity Limits

Space or Equipment Type	Vibration Velocity Limits (µm/s)
General office	200
Computer systems	200
Animal facility procedure areas	50
General laboratory	50
Rodent behavioral	50
Micro-surgery	25
Ordinary surgery	25
Animal research facility	200
Microscope core (EM laser)	25
Laser-based optical systems	12
Super microscope - very low - should be slab on grade (SOG)	Slab on grade
MRI and NMR - slab on grade	Slab on grade
Above grade	12
Steel-framed buildings often require increased design live load to allow for 2.5 times the weight of the instrument for an inertia block.	12
Electron microscope greater than 30 000 x mag, mass spectrometers, cell implant	6

Space or Equipment Type	Vibration Velocity Limits (µm/s)
Eye surgery, neurosurgery	25
Bench scopes up to 100 x mag	50
Bench scopes up to 400 x mag	25
Electron microscopes up to 30 000 x mag	12
Bench microscopes greater than 400 x mag and optical equipment on isolation tables	25

E.3.8 Post-tensioned Concrete: Inadvertent cutting of post-tensioned concrete is a safety hazard. The tensioned steel strands within the concrete, if cut, may eject from the ends of the tubes into which they were placed or otherwise create danger to personnel. No holes should be cored or other demolition should occur before ground-penetrating radar and pacometer testing (both non-dangerous procedures) are conducted and recorded under the supervision of a registered professional structural engineer. These procedures are to be used to locate the tensioned strands in the area of interest and the information is to be provided to the registered professional engineer to design the procedure under which the demolition work is to be done. Demolition should be performed under the supervision of the design professional.

At the NIH, Buildings 40, 50, and the Clinical Research Center have floor construction of post-tensioned concrete. Building 36 has a floor area created by post-tensioned concrete construction.

E.3.9 Level of Concrete Finished Floors: Unless otherwise specified, a concrete floor shall be level, ±3 mm in height in 3 050 mm in any direction, measured at any point of the floor. Floor flatness (F_F) and floor levelness (F_L) numbers shall be specified when the installations of finish materials, functional conditions, or equipment dictate tight control of concrete slab substrates.

E.3.10 Use of Recycled Materials in Concrete: The NIH encourages the use of recycled materials in concrete unless a product is not available competitively within a reasonable timeframe, does not meet appropriate performance standards, or is available at only an unreasonable price. Concrete containing coal fly ash or ground granulated blast furnace slag should be considered for NIH projects.

F. Mechanical

The following design policies and guidelines apply to all systems within the mechanical engineering discipline. The purpose is to provide uniformity of design based on the established NIH Architectural and Engineering Design Policy and Guidelines. Systems may include heating, ventilation, and air-conditioning (HVAC), piping, insulation, and automatic controls.

F.1 Reference Design and Safety Guidelines for the HVAC Designer

The NIH is a progressive and dynamic biomedical research institution where state-of-the-art medicine is the standard practice. To support state-of-the-art research and medical care, the facilities must also be state of the art. It is the NIH intent to build and maintain the physical plant and facilities in accordance with the latest standards. It has been the NIH experience that renovation and rehabilitation of existing facilities do not lend themselves to incorporating the "latest" standards of the industry, primarily because of outdated and inadequate mechanical systems or because the planned function is incompatible with the original criteria for the facility.

The architect and engineer (A/E) will be alerted to this type of situation and make an evaluation early in the design stage to determine the feasibility of implementing the latest standard. The A/E should document such findings, provide recommendations, and report them to the Project Officer for a decision on how to proceed.

The A/E design firm should use and comply with, as a minimum, the latest issue of the following design and safety guidelines. In addition, the A/E should use other safety guidelines received from the NIH Project Officer or as required by program. The A/E should utilize the latest versions of guidelines available at the time the project proceeds with schematic design.

The design and safety guidelines include, but are not limited to, the following:

- *The International Building Code.*
- *The International Mechanical Code.*
- *The International Energy Conservation Code.*

- International Code Council, Inc., and Building Officials and Code Administrators (BOCA) International, Inc.: 4051 W. Flossmoor Road, Country Club Hills, IL 60477-5795.
- American Society of Heating, Refrigerating and Air-Conditioning Engineers (ASHRAE), Inc.: 1791 Tullie Circle, NE, Atlanta, GA 30329.
- *ASHRAE Handbooks and Standards.*
- *Industrial Ventilation: A Manual of Recommended Practice*: American Conference of Governmental Industrial Hygienists, 6500 Glenway Avenue, Building D-7, Cincinnati, OH 45211.
- *Occupational Safety and Health Standards*, CFR 29, Part 1910:U.S. Department of Labor, Occupational Safety and Health Administration (OSHA).
- *Guidelines for Research Involving Recombinant DNA Molecules*: U.S. Department of Health and Human Services, U.S. Public Health Service, National Institutes of Health, Federal Register/Vol. 51, No. 88: 16957-16985, Bethesda, MD: National Institutes of Health.
- *Standard 49 for Class II (Laminar Flow) Biohazard Cabinetry*: National Sanitation Foundation Joint Committee on Biohazard Cabinetry, Ann Arbor, MI: National Sanitation Foundation.
- *Ventilation Design Handbook on Animal Research Facilities Using Static Microisolators*, Volumes I and II, September 1998, Farhad Memarzadeh, Ph.D., P.E. National Institutes of Health, Bethesda, MD: Office of Research Services.
- *Methodology for Optimization of Laboratory Hood Containment,* Volumes I and II, November 1996, Farhad Memarzadeh, Ph.D., P.E. National Institutes of Health, Bethesda, MD: Office of Research Services.
- *Assessing the Efficacy of Ultraviolet Germicidal Irradiation (UVGI) and Ventilation in Removing Mycobacterium Tuberculosis, November 2001,* Farhad Memarzadeh, Ph.D., P.E. National Institutes of Health, Bethesda, MD: Office of Research Services.
- *Ventilation Design in Animal Research Facilities Using Static Microisolators,* Farhad Memarzadeh, Ph.D., P.E., Gerald Riskowski, Ph.D., P.E., *ASHRAE Transactions 2000,* Volume 106, Part 1, 859-866.
- *Investigation of Static Microisolators in Wind Tunnel Test and Validation of CFD Cage Model*, Farhad Memarzadeh, Ph.D., P.E., Gerald Riskowski, Ph.D., P.E., *ASHRAE Transactions 2000,* Volume 106, Part 1, 867-876.
- *Analysis of Air Supply Type and Exhaust Location in Laboratory Research Facilities Using CFD,* Andrew Manning, Ph.D., Farhad Memarzadeh, Ph.D., P.E.,

Gerald Riskowski, Ph.D., P.E., *ASHRAE Transactions 2000,* Volume 106, Part 1, 877-883.

- *Methodology for Minimizing Risk from Airborne Organisms in Hospital Isolation Rooms*, Farhad Memarzadeh, Ph.D., P.E., Jane Jiang, Ph.D., *ASHRAE Transactions 2000,* Volume 106, Part 2, 731-747.
- *Thermal Comfort, Uniformity, and Ventilation Effectiveness in Patient Rooms: Performance Assessment Using Ventilation Indices,* Farhad Memarzadeh, Ph.D., P.E., Andrew Manning, Ph.D., ASHRAE *Transactions 2000,* Volume 106, Part 2, 748-761.
- *Laboratory Safety Monograph: A Supplement to the NIH Guidelines for Recombinant DNA Research,* U.S. Department of Health and Human Services, U.S. Public Health Service, National Institutes of Health, Bethesda, MD: National Institutes of Health.
- *Guidelines for Laboratory Design: Health and Safety Considerations, 3rd Edition.* DiBernardinis, L., and J.S. Baum, M.W. First, G.T. Gatewood, and A.K. Seth. September 2001. New York: John Wiley and Sons.
- *Biosafety in Microbiological and Biomedical Laboratories*: U.S. Department of Health and Human Services. Washington, DC: Public Health Service, Centers for Disease Control, and National Institutes of Health, HHS Pub. No. (NIH) 99-8395, IVth Edition, April 1999.
- *NIH Guidelines for the Laboratory Use of Chemical Carcinogens*: U.S. Department of Health and Human Services, Bethesda, MD: National Institutes of Health, NIH Pub. No. 81-2385.
- *National Fire Codes*, all volumes, National Fire Protection Association (NFPA), 1 Batterymarch Park, Quincy, MA 02269-9101.
- *Guide for the Care and Use of Laboratory Animals,* Institute of Laboratory Animal Resources, National Academy of Sciences. Washington, DC: National Academy Press.
- *Guidelines for Design and Construction of Hospital and Health Care Facilities,* American Institute of Architects Committee on Architecture for Health with assistance from the U.S. Department of Health and Human Services. American Institute of Architects Press, 1735 New York Avenue, NW, Washington, DC 20006.
- *Medical Laboratory Planning and Design*: College of American Pathologists, Skokie, IL.
- *American Society for Healthcare Engineering*, all volumes: American Hospital Association, One North Franklin, 28th Floor, Chicago, IL 60606.

F.2 Building Design Considerations

The project engineer should include at the completion of the schematic design phase a Basis of Design report. The report should be a bound presentation with documentation sufficiently complete to justify the complete design concept of the A/E. Detailed building design criteria, computations, schematic system diagrams, commissioning plan criteria, economic analysis, and life-cycle costing comparisons shall be included as a part of the Basis of Design report.

F.2.1 Energy Conservation: The *International Energy Conservation Code* should be utilized to regulate the design and construction of the exterior envelopes and selection of HVAC, service water heating, electrical distribution and illuminating systems, and equipment required for the purpose of effective use of energy, and shall govern all buildings and structures erected for human occupancy. When requirements of the energy conservation code cannot be satisfied because of program requirements, the NIH Project Officer should be notified. Refer to General Design Guidelines, Section: Sustainable Design, for energy conservation guidelines to be followed for the design of NIH buildings.

F.3 Noise and Vibration

These design guidelines are intended to provide general information about noise and vibration control to the A/Es charged with designing mechanical and electrical systems for the NIH. They cover situations that arise in the design process and significant items to check at design reviews. As a supplement to other sources of technical information, such as the Sound and Vibration Control section of the ASHRAE *Applications Handbook* and the advice of an acoustical consultant, they are intended to help the engineers achieve appropriate sound and vibration levels required by the program functions.

F.3.1 Background Noise: All rooms in all buildings, except special acoustical laboratories, are exposed to some level of audible and measurable ambient sound. It may be due to nearby street traffic but more often is governed by the building's own mechanical and electrical systems. Ambient sound should be, and usually is, anonymous in character. This is an accepted acoustical condition to which we are almost always exposed. The ambient sound should never be so loud as to interfere with speech or telephone use in a space. Frequently, modest levels of ambient sound are needed to mask distracting extraneous sounds.

Noise is characterized by a certain spectrum indicating the sound pressure level at various frequencies. Very often, the spectrum of a noise is as important as its absolute level. Although speech and airplane takeoff may be perceived as being about the same loudness, it is much more difficult to attenuate the lower frequency noise. The level of such background sounds is commonly related to a series of noise criteria (NC) or room criteria (RC) curves. These spectra have been developed to account for the approximate sensitivity of the human ear to high-frequency noise over low-frequency noise and also to the typical spectrum of human speech. The NC/RC value for a given spectrum is then determined by its highest point in relation to the NC curves. To determine the NC/RC value in the field, sound pressure levels should be measured with an octave-band sound-level meter.

For most spaces, recommended NC/RC levels have been established through many years of experience. In general, for areas where listening is critical and speech communication is important, the NC/RC level should be low. For areas where speech is at close distances (1.8-3.0 m), the NC/RC level may be higher. Table F.3.1 lists recommended NC levels for a variety of spaces. NC levels are based on rooms not being occupied and with all user equipment off.

Table F.3.1 Recommended NC Levels

Area	NC Level
Auditoriums	20-25
Audiology suites, audio/speech, pathology, and phonology/cardiac	25
Chapel and chapel meditation	25
Private residences	25-30
Conference rooms	25-30
Hospital rooms	25-35
Patient rooms	35
Executive offices	30-35
Classrooms	30-35
Open-plan offices	35-45
Dining rooms, offices, and lobbies	40
Central sterile food service/serving	45

Area	NC Level
Operating rooms	40-45
Research laboratories	40-45
Corridors and support areas	45
Kitchen, lockers, warehouse, and shops	50
Research animal housing areas	see note

Note. When evaluating the noise levels in research animal housing areas, it is necessary to consider both the people and the animals in these spaces. For reasonable speech communication in these spaces, a maximum noise level of NC-45 should be maintained. The acoustical consultant should determine specific requirements for animal research areas with the Project Officer and research staff.

The above NC values may be increased for unitary or user equipment installed within occupied spaces as approved by the Project Officer. The sound levels apply to these spaces in most common situations. If the users of the space are hearing impaired, then the tolerance for high background noise levels is greatly reduced. For situations involving audiological testing, there are very specific requirements. In either of the latter two cases, an acoustical consultant should be involved in the design at an early stage. Systems must be engineered and the use of sound attenuation provided as required to achieve specified sound levels.

Both the project engineer and the Government should be aware of the costs and benefits related to the choice of noise criteria or room criteria curves. Studies have shown RC curves to have a more desirable spectrum for background noise. However, RC curves may require more noise reduction in lower octave bands than would be required for an NC curve. This noise reduction may entail significant costs in equipment and operations. For spaces at about NC-30 or NC-40, the duct silencers will be 1.5 to 2.0 times longer and pressure drop will increase 10 to 20 percent. If architectural constructions are used for noise control, they will also be more massive and elaborate. In general, NC curves provide a more reasonable fit between costs and benefits and should be utilized for NIH buildings.

F.3.2 Scientific Equipment Noise: The design team should be aware that many noise sources in health care and research facilities are not related to the building mechanical system. NIH buildings are often equipped with refrigerators, centrifuges, and other scientific equipment that contribute significantly to the ambient noise level.

In some cases, this equipment will be located in service corridors and adjacent to occupied spaces.

Most of this equipment operates intermittently and is often under the control of the user. Since the types of equipment vary greatly, it is not possible to prescribe a single means of noise control. We recommend that equipment that produces significant amounts of noise be considered during the design stage. Any equipment that either produces noise levels in excess of 50 dB (A) at a distance of 914 mm, or is simply known by the laboratory users to produce objectionable noises, should be considered a significant noise source.

For adequate speech intelligibility at a distance of 1.8 m, with normal voice effort, the background noise level should not exceed 50 dB (A) or NC-45. In addition, the background noise spectrum should not interfere with speech intelligibility. Since the bulk of speech intelligibility is in the 500 to 4 000 Hz octave bands, sound levels should be lower in that area. A goal of NC-45 is equal to 53 dB (A) and has been designed to account for the frequency distribution of speech intelligibility. NC-45 should be used as a maximum design goal for occupied research areas in NIH buildings.

As noted previously, refrigerators and other scientific equipment are frequently removed from occupied areas and placed in corridors. In many cases, this alone can cause fairly high noise levels. Because of this, noise levels of NC-45 in corridors and support areas are recommended.

F.3.3 Background Noise for Open Offices: Most office workers have difficulty concentrating when distracted by conversations and intruding noises. In open-plan offices, voices and the sounds of other activities are easily transmitted between workstations because there are no full-height partitions or barriers. Even with the most effective acoustical treatment on the partial-height partitions and ceilings, the intruding sounds will be clearly audible unless they are masked by other sounds. For this reason, providing such masking sound is essential in the design of any open-plan office where speech privacy or the ability to concentrate is important. Even in buildings with conventional enclosed offices, full-height partitions may not provide adequate acoustical isolation for confidential speech privacy if the background sound levels are too low. Installation of a sound-masking system can be the least expensive, simplest way to achieve satisfactory privacy.

For satisfactory performance, a sound-masking system must provide an even blanket of sound throughout the office. The masking sound must be free of annoying spatial or temporal differences in loudness and must provide specific levels of sound at specific frequencies. At the same time, it must be unobtrusive in overall level and character so that it is not, in itself, an annoyance to the office occupants. Elevated background noise levels can, however, cause problems for hearing-impaired employees. If it is known that one or more hearing-impaired employees will be working in an area, then the designer should endeavor to provide a space with low background noise levels and a significant amount of acoustical absorption. If a sound-masking system is provided, the use of adjustable levels in zones can be beneficial.

F.3.4 Design Guidelines: The evaluation of mechanical system noise should take place in the early design phase of a project. This evaluation is as important as thermal load calculations. System noise calculations are the responsibility of the project engineers designing the system, unless an acoustical consultant is employed. It is not recommended that a project engineer without experience in acoustical matters attempt an acoustical analysis of a major project. It is the experience of the NIH that about two-thirds of these analyses are wrong in very elementary ways, and the monetary consequences to correct acoustical deficiencies can be substantial.

F.3.5 Noise Control: For most large buildings, there will be three types of mechanical rooms: central mechanical rooms, interstitial spaces, and individual floor mechanical rooms. To begin an analysis of the requirements for sound attenuation and vibration isolation of the mechanical room, two items must be identified. The first is requirements of adjacent rooms, both in plan and in section. The second is the type and size of equipment in the mechanical room. The selections need only to be general at this point. Reasonable sound-level estimates can be made without specific manufacturer's model numbers for standard equipment.

The ASHRAE *Applications Handbook* Sound and Vibration Control section allows the project engineer to make general estimates of equipment noise levels. For significant equipment, manufacturers should be asked to provide laboratory-generated sound power levels. These should then be incorporated into the equipment requirements of the project specifications. In many cases, it may be possible to minimize expensive noise control measures if quieter equipment can be selected.

At this point, it is possible to estimate the noise reduction requirements for the mechanical room. If a mechanical room is to be located below or above a noise-sensitive space, this should be identified early in the design. If the floor slab above or below mechanical equipment is not sufficiently massive to provide adequate noise isolation, then it may be difficult to modify it after the structural system has been sized and set. At this point, two solutions are often used. One is a floating floor and the other is a resiliently suspended gypsum board ceiling in the mechanical room or in the noise-sensitive space below. The first is very expensive, and the second is very difficult to install properly in the equipment room below because of pipes, conduit, and equipment. Spaces underneath mechanical rooms face similar problems, but it is generally easier to install a suspended gypsum ceiling in a conference room or office than in a mechanical room.

If possible, the mechanical room should be located away from noise-sensitive spaces. Buffer spaces such as corridors, toilets, elevator shafts, electric closets, and other service spaces may eliminate the need to build special noise-isolating constructions such as floated floors or double-layer wall constructions. In all cases, central mechanical rooms in occupied buildings should have heavy walls of masonry or poured concrete. All penetrations of walls, floors, and ceilings by ducts, pipes, conduit, and so on should be resiliently sealed airtight. Particular attention should be paid to doors, as these often represent the “weak link” in sound isolation. A good-quality gasket system to minimize the maintenance problems may be used where required to seal air leaks. Mechanical and electrical equipment spaces located within NIH buildings should preferably be designed without additional sound treatments. When a mechanical room is near noise-sensitive areas, it shall have a sound-absorbing treatment installed on the walls and ceiling. At least 30 percent of the available wall surfaces and 50 percent of the ceiling surface should be covered with a sound-absorbing treatment. The preferred material is a glass fiberboard with a density in the range of 24 to 64 kg/cm. Other sound-absorbing materials can be used, except cellular plastic materials, and these should provide a minimum noise reduction coefficient (NRC) of 0.65 for a 25 mm thickness and a minimum NRC of 0.80 for 50 mm and 75 mm thicknesses as determined by American Society for Testing and Materials (ASTM) C423. They should also provide a minimum flame-spread rating of 25 and a minimum smoke-developed rating of 50 as determined by ASTM E84.

The minimum thickness of the sound-absorbing glass fiber material used in equipment spaces should be as follows:

Table F.3.5.a Minimum Thickness of Sound-Absorbing Treatment

Space Contents	Minimum Thickness of Sound-Absorbing Treatment (mm)
Boilers and emergency generators	75
Chillers and fans	50
Pumps, compressors, transformers, elevator, MG sets, and switchgear	25

Consideration should be given to the application of enclosures or jackets over generators to provide additional attenuation for equipment operators within the space. Sound-absorbing treatment also reduces the noise levels in mechanical equipment and other high noise-level spaces and helps reduce the possibility of hearing damage to maintenance personnel. Tabulated below are the maximum allowable noise exposure limitations for hearing conversation of individuals in high noise-level areas, as defined by the Occupational Safety and Health Administration (OSHA).

Table F.3.5.b OSHA Sound Level Limits

Exposure Duration (h/d)	Sound Level OSHA Limits (dB A)
8	90
6	92
4	95
3	97
2	100
1½	102
1	105
½	110
¼ and less	115

F.3.5.1 Airborne Noise Control: In designing a building HVAC system, it is most common to size ductwork on an equal-friction basis and consider velocities indirectly, as they relate to the volume flow and pressure drop in the ducts. For purposes of noise control, it is often necessary to consider duct velocity for its own ability to generate noise in a system. (Velocities in airflow generate turbulence and therefore noise.) The amount of noise generated is proportional to 50 x log (velocity). Because of the uncertainties involved in calculating exact velocities through elbows, dampers, and other fittings during the design process, it is often best to use general guidelines. The path of noise to any potential receiver should be examined. In most cases, the dominant path for noise is through the duct to a room outlet. In more severe cases, noise from turbulence may "break out" of the duct and enter a space directly. The final general area to consider is the acceptable noise level at the receiver location. Duct velocities serving auditoriums must be considerably less than those serving research laboratories.

The selection of quieter, initially more expensive equipment is generally more economical than a less expensive type, which requires considerably more noise and vibration control. Measured sound-power ratings should be supplied by the manufacturer and should be a factor in the selection of each major piece of mechanical equipment. Low- or medium-air velocity systems should be used. Low-velocity distribution requires less energy to move the air and also greatly reduces the generation and regeneration of noise produced by high velocities.

Table F.3.5.1 lists recommended velocities for ductwork serving spaces with a given NC rating. When measuring distance from the air terminal, it is important to measure from each terminal, not just the last one. In this case, the "terminal" is a bit different from what is used for static pressure calculations. These velocities may be increased if all paths to the receiver from the turbulence in the duct are considered. In general, this means installing a silencer along the duct. To prevent breakout noise, a duct enclosure or architectural construction must also be used.

Table F.3.5.1 Recommended Maximum Air Velocity in Duct System

Location	Maximum Air Velocity (m/s)									
	NC-25		NC-30		NC-35		NC-40		NC-45	
	Supply	Return	Supply	Return	Supply	Return	Supply	Return	Supply	Return
Air velocity through net-free area of terminal device, 13 mm minimum slot width	1.78	2.13	2.16	2.59	2.54	3.05	3.05	3.66	3.66	4.37
3 m of duct before opening	2.13	2.49	2.59	3.05	3.05	3.56	3.66	4.27	4.37	5.08
Next 3 m	2.84	3.20	3.45	3.89	4.06	4.59	4.88	5.49	5.84	6.60
Next 3 m	3.56	4.06	4.32	4.93	5.08	5.28	6.10	6.35	7.32	7.62
Next 3 m	4.57	4.98	5.49	6.00	6.50	7.11	7.78	8.53	9.35	10.23
Next 3 m	5.19	6.40	6.91	7.82	8.13	9.14	9.75	10.97	11.68	13.21
Next 3 m	7.11	7.82	8.63	9.50	10.16	11.18	12.19	13.41	15.24	16.10

Note: Velocities for exhaust systems should refer to recommended return velocities unless higher velocities are required by Industrial Ventilation Standards.

F.3.5.2 Rooftop Equipment: For some buildings, packaged rooftop or commercial-grade unitary equipment may be used rather than having equipment located in central or individual mechanical rooms. Special care should be taken in the location, selection, and design of this type of equipment. The roof structure should be sufficiently stiff that it does not vibrate with the equipment. Most commonly used vibration isolation selection tables assume a reasonably stiff supporting structure. In the case of many lightweight roofs, that assumption is neither safe nor accurate. From an acoustical viewpoint, the preferred mounting arrangement is to place the unit above the roof by 610 mm or 915 mm on supplemental steel framing. Equipment manufacturers' internal vibration isolation furnished as standard or optional equipment may not be adequate for controlling the transmission of noise and vibration. The required deflection should be maintained for either internal or external isolation. However, manufactured, spring-isolated roof curbs are available with integral isolation. These units can provide spring deflections ranging from 6 to 75 mm and can be used as an acceptable option. Curb isolation may be adequate,

but proper isolator selection is important to compensate for each building construction condition. In addition to structural vibrations, the noise radiated from the unit casing and the supply and return ductwork must be considered. In most of these cases, there is a potential noise problem that would almost always be worst directly under the unit. In addition to these unique problems, normal duct-borne fan noise should also be considered. All of this is not a reason to eliminate the use of rooftop equipment, but it is necessary to review these points to properly evaluate all these potential problems. It is recommended that housed-type vibration isolation mounts not be used.

F.3.5.3 Noise Outside Equipment Rooms: Many noise problems with mechanical systems are associated with that part of the building just outside the equipment room. This type of noise is generated in two ways. The most common is noise generated by the fan that is propagated within the ducts to outlets. The second type is noise generated by air turbulence at fittings, vanes, and dampers. High-pressure, high-velocity systems will often have significant quantities of both types of noise and vibration. The noise generated by ducted systems will typically enter spaces in three ways. It may pass through the duct walls and into noise-sensitive spaces. It may travel within the ductwork and enter a space through supply or return grilles. Finally, vibrations in the duct may be transmitted into other surfaces or utility systems to either create noise or become perceived vibrations. This final type will be covered in the Vibration Isolation paragraph.

Noise that passes through duct walls is usually referred to as “breakout” or “breakin” noise. This noise may be either fan noise or velocity-generated fitting noise. This is often a problem closest to the fan. At this point, the ducts are large and therefore not very stiff. Near the mechanical room, noise from the fan has not been attenuated by long runs of ducts. This usually causes a low-frequency rumble in the vicinity of main ducts, especially if the duct is directly above a lay-in acoustical tile ceiling. Exposed duct, in itself, does not create a noise problem. In the case of exposed ducts, breakout noise would not be attenuated by a ceiling. However, the noise reduction provided by a lay-in ceiling is negligible at low frequencies. Calculations based on the ASHRAE *Applications Handbook* Sound and Vibration Control section should be performed to determine the likelihood of a problem. Should there be a problem, several methods can reduce the potential noise level. First, the duct may be rerouted over a noncritical area. Second, round duct or multiple round ducts may be used in lieu of rectangular duct if adequate space is available, since round duct is stiffer.

Third, the duct may be externally wrapped or encased. The final two methods are difficult to do well.

Duct wrappings may encounter sufficient numbers of obstructions and penetrations to render them ineffective. Accessing valves and duct-mounted equipment becomes difficult. While wrapping can be effective, it should be employed only when absolutely necessary.

F.3.5.4 Duct-Borne Noise: The passage of noise from the fan along the inside of the duct and into a space is one of the most common noise problems associated with mechanical systems. The engineering procedures to deal with this problem are also well documented in the ASHRAE *Applications Handbook* Sound and Vibration Control section. It should be pointed out that this method can also be used to calculate the propagation of noise generated at fittings and dampers away from the fan. This is particularly relevant in the design of laboratory exhaust systems, where the velocities and pressures in the systems are often quite high. In these circumstances, high levels of noise may be generated at fittings and volume-regulating dampers. For laboratory systems in particular, this noise should be included in the acoustical analysis of the system. Within the duct system, several items provide some attenuation of noise. These are branch takeoffs, open-end reflections, fittings, and duct silencers. These are all discussed in detail in the ASHRAE *Applications Handbook*, so only some minor points will be discussed here. Branch takeoffs provide a division of sound energy proportional to the decibel ratio of the areas involved. For example, assume the room in question is served by a 508 x 254 mm (129 032 mm^2) branch from a 1 219 x 1 219 mm (1 485 961 mm^2) trunk. The attenuation provided is 10 x log (200/200 + 2,304) or 11 dB. This credit should be taken only where one of the branches does not enter the room in question. Where a fan serves many rooms, this can be a substantial help. Duct lining is one of the most efficient noise control measures available, but lining is not approved for use in NIH buildings.

Manufactured duct silencers are another commonly used means of noise control. These are commercially manufactured sound absorbers. They consist of a section of sheet metal with perforated interior skin and sound-absorbing in-fill and are available in many constructions, sizes, and shapes. In general, these factors can be matched to the requirements of the system under design. In the design of hospital, animal, and laboratory systems, it may not be appropriate to allow standard perforated, fiberglass-packed, galvanized silencers. Alternately, a requirement for high-grade

stainless steel, packless washable silencers may be necessary. Silencer manufacturers can also provide thin plastic bags for the fill. They also provide a thin mesh screen between the bagged fill and the perforated metal baffles to ensure minimum degradation of acoustical performance. Insertion loss and spectrum level are also important characteristics when selecting duct silencers. Generally, the 125, 250, and 500 Hz octave-band center frequencies are most critical. Duct-borne sound-level calculations will provide the required insertion loss for a silencer. Sample calculations provided by some manufacturers will often show a very close match between the octave-band insertion loss requirements and the performance of the silencer that is chosen. This does not usually happen in real-world situations. The insertion loss requirement for the silencer will usually be dominated by one or two low-frequency octave-band center frequencies depending on fan type, blade passage frequency, and blade configuration, which affect the fan sound-power level. The other factors in silencer performance that should be considered are size and pressure drop. It is usually possible to meet the insertion loss requirements with several different-sized silencers. That choice is usually between a long, low-pressure drop silencer and a shorter, high-pressure drop silencer. At this point, the engineer must make a choice between system operating cost and first cost. Once a silencer is selected, it must be incorporated into the duct layout. The silencer should be located so that smooth airflow is maintained into and out of the silencer. Poor design in these areas can cause the actual pressure drop to be much more than that listed by the manufacturer and can also degrade acoustical performance. Proper specifications should require ratings in dynamic insertion loss (DIL), i.e., with air flowing through the silencer. All supply and return exhaust air (research laboratory and animal research facilities only) systems shall use packless type silencers. Silencers such as IAC type HS may be used for all supply boxes if they are clean flow boxes with Tedlar or other coverings conforming to NFPA 90 standard over perforated metal cover liner with an erosion-proof surface meeting ASTM C1071-91 test. The liner must have passed and shown **no** observed growth for the test for mold growth and humidity using UL 181, fungi resistance ASTM C1071, and ASTM G21 tests and bacteria growth using ASTM G22 test.

It is important in locating the silencer to keep in mind that any noise generated downstream or upstream in the case of exhaust systems from the silencer will not be attenuated. For a laboratory system, it is important to remember that constant-volume-regulating dampers will usually generate a substantial amount of noise, especially if there is a substantial pressure drop (more than about 25 mm) across the regulating damper. If the silencers are placed near the fan, then noise generated by

these dampers will enter the laboratory unattenuated by the silencers. For spaces with critical listening requirements, such as auditoriums and large conference rooms, similar problems can be created by excessive velocities at supply or return terminal devices. Since the amount of noise is velocity related, it is advisable to elect terminal devices with more free area for critical spaces.

F.3.6 Equipment Noise: In some cases, the engineer may be concerned with noise from relatively small pieces of equipment, particularly if they are located in an occupied space rather than in a remote mechanical room. These include "active" devices and "passive" devices. Active devices are most often items such as fan coil units, heat pumps, or air terminal units. Passive devices are most often diffusers, air-monitoring devices, grilles, and louvers. For the active devices, most manufacturers can provide octave-band sound-power levels. For passive devices, manufacturers' ratings may also be provided. In general, these can be used if some attention is paid to the quantity of diffusers in a room. Hoods with velocities around 0.76 m/s will almost never be a direct cause of noise. System noise may come out of the hood, though. The same is true of louvers. Noise may often be heard coming out of these devices, but they are not often the actual cause of the noise.

F.3.7 Vibration Isolation: Structure-borne sound is produced by a noise source, such as a piece of vibrating machinery, that transmits energy directly into and through the structure, often to remote locations in a building, and is reradiated by wall and floor construction as airborne noise. All vibrating equipment in facilities must be resiliently mounted.

The purpose of vibration isolation is to reduce the vibrational energy produced by rotating equipment so that it is not passed into the structure and into larger "sounding boards" where it can be translated into audible noise. In the case of some sensitive scientific equipment, structural vibrations may be harmful to its operation. This is true even in some cases where the frequency and level of the vibration are so low that they cannot be felt but measured only with sophisticated instrumentation. When a project involves the use of vibration-sensitive equipment, such as electron microscopes, a vibration specialist should always be consulted. The ASHRAE *Applications Handbook* Sound and Vibration Control section contains guidelines and a table of vibration isolation selections for most common situations.

Space requirements for the isolation springs and equipment bases should be included in the equipment layout. At least 50 mm of horizontal and vertical clearance

should be provided between all isolated equipment and the building structure. More space is usually preferred for proper access for installation and adjustment. If equipment can be located in an area that is as stiff as possible, then vibration isolation requirements will be minimized. Equipment that is located on grade is preferred; if that is not possible, then areas above stiff major beams are the second-best location. For standard mechanical equipment, the location is most important for large equipment with a slow rotational speed. For very lightweight mounting surfaces, particularly roof decks, it may be necessary to provide separate framing for the mechanical equipment.

Housekeeping pads are usually provided under all floor-supported equipment. The pads should be connected to the slab with steel dowels. The pad area may be sized to extend beyond the resilient mounts of isolated equipment. These pads are intended to provide local mass and stiffness below mechanical equipment and to keep resilient mounts off the floor, where they may be easily blocked by debris under the spring or equipment bases.

Four basic types of vibration isolators or resilient mounts are resilient pads, elastomeric mounts, steel springs, and pneumatic mounts. Each type has advantages over the others depending on the degree of isolation required, loadings, flexibility of the supporting structure, and driving frequency.

- **Resilient Pad Mounts.** Resilient isolators are the easiest and most commonly used material. Resilient pad mounts are available in a variety of materials such as ribbed or waffled neoprene and rubber, precompressed, load-bearing glass fiber, felt foam, and cork. For maximum life and durability, pads of rubber, neoprene, or glass fiber should be used. Care shall be taken, however, in the selection of the proper material type, density, thickness, and size to ensure that the appropriate loading of the material is achieved. Overloading a resilient pad material causes increased stiffness of the pad and thereby significantly reduces its isolating effectiveness.
- **Elastomeric Mounts.** General-purpose elastomeric mounts typically consist of a resilient material such as neoprene, which can be easily molded into special shapes. These mounts shall be bonded to metal plates and support members of the equipment.
- **Steel Spring Isolators.** The most effective vibration isolating devices available are steel-spring mounts, particularly where large pieces of equipment are involved.

- **Pneumatic Mounts.** Where low-natural-frequency mounts are required, pneumatic vibration isolators should be used. In this type of mount, an elastomer is combined with air to form a rubber/air spring. Pneumatic mounts provide both support and resilience for the equipment mounted on them. By proper sizing and distribution, a very stable, low-profile and low-natural-frequency isolator mount can be obtained with built-in shock overload protection and built-in damping and, in certain cases, without the need for external lateral stability provisions.

F.3.8 Equipment Installation: Mechanical equipment with a high power-to-weight ratio should first be mounted on a concrete inertia base approximately 1 to 2 times the weight of the equipment, plus system fluids, if any. The inertia base and equipment should be resiliently isolated on freestanding, unhoused, stable steel springs and noise isolation pads. Typical pieces of equipment that require concrete inertia bases include fans and chillers over 18.6 kW and pumps and compressors over 3.7 kW. Fan equipment with motors smaller than 18.6 kW should be mounted on rigid structural-steel frames and the entire assembly mounted on vibration isolators plus noise isolation pads. When the building structural system cannot accommodate the added weight of concrete inertia bases, very high efficiency isolators such as pneumatic mounts should be used to isolate the equipment mounted on rigid steel frames.

Restraint for lateral and vertical seismic loadings should be achieved through the use of resilient snubbers, which are mounted outboard of the inertia base on the housekeeping pad. The snubbers shall consist of steel angles or brackets bolted to the structure with a layer of resilient material between the inertia base and steel angle. The steel angles and bolts should be sized by the structural engineer to accommodate the applicable G-force loadings (either static or dynamic) based on the design parameters of each project. Several vibration isolation manufacturers provide isolators that have integral seismic restraint elements built in. However, since inspection of the interior of the units is difficult, they are susceptible to flanking of vibrational energy due to metal-to-metal contact through misalignment.

F.3.9 Steel Spring Isolator Specifications: The most effective vibration isolation system for mechanical equipment involves mounting the equipment plus inertia base or steel frame on freestanding, unhoused, stable-steel springs, with additional travel between solid (fully compressed) height and design height equal to 50 percent of the static deflection of the spring. Housed-spring units with multiple, small-diameter coils or units with rubber or neoprene cups must not be used. The horizontal stiffness of

the spring isolators shall be specified to be between 0.9 and 1.2 times the vertical stiffness, and the outside diameter of the springs shall be between 0.85 and 1.25 times the operating height of the spring. Each spring should be equipped with a resilient noise isolation pad between the structure and spring foot. The noise isolation pad shall be precompressed, molded, neoprene-jacketed, load-bearing glass fiber or multiple layers of ribbed or waffled neoprene. For mechanical equipment located on grade, the noise isolation pad shall be a minimum of 13 mm thick. At all locations above the grade level, the noise isolation pad should be at least 25 mm thick.

F.3.10 Static Deflections: The static deflections required for vibration isolators are determined by the speed and horsepower of the equipment mounted on them, as well as by the location of the equipment within the building. For this reason, it is best to locate as much of the vibrating equipment at grade level as is practicable. All mechanical equipment above grade level should be located as close as possible to or over a column, load-bearing wall, or other stiff structural member. At above-grade locations, the minimum static deflection of any steel spring used to vibration-isolate a piece of equipment shall be 25 mm. Fractional horsepower equipment should be mounted on rubber-in-shear or glass fiber isolators providing at least 13 mm static deflection.

F.3.11 Flanking Transmission: Flanking transmission of vibrational energy from mechanical equipment should be minimized. All connections to vibrating equipment shall be through flexible connectors, conduits, piping, or hose. Resilient ceiling hangers or floor-mounted resilient supports should support all piping in mechanical equipment spaces connected to vibrating equipment. Penetrations through equipment room walls and ceilings should be oversized, packed with a resilient material such as glass fiber or mineral fiber, caulked airtight, and covered with escutcheon plates where required for fire ratings. Piping should be supported on both sides of the penetrations and should not rest on the structure.

F.3.12 Piping Systems: One of the most common acoustical problems found in buildings is noise generated by the piping systems. Because of its easily identifiable nature, piping noise is one of the most disturbing and offensive types of noises encountered in buildings even though the levels are seldom excessively high. Most of the noise from piping systems is structure-borne, being transmitted along the piping throughout the building where the noise is reradiated as airborne noise.

Piping runs should be resiliently isolated from the surrounding structure, particularly when the piping runs are adjacent to acoustically sensitive areas such as conference rooms. Isolating materials should consist of rubber, neoprene, or spring mounts and felt- or glass fiber-lined sheet metal straps or clamps. At all wall and floor penetration and anchorage points, water piping runs should be free from the structure and the opening packed with a resilient insulation material and fully caulked. Pipes larger than 50 mm in diameter should be suspended from the structure on neoprene-in-shear hangers or floor-mounted on resilient supports. Riser piping near critical areas shall be kept free of the structure, and vertical alignment should be achieved through the use of resilient guides rather than solid anchorage to the structure. Flexible pipe connectors should be used to connect the supply and drain pipes to vibrating units such as garbage disposals, pot and pan washers, and dishwashers.

High-pressure steam and water systems are inherently noisy because of turbulence in the fluid flow. To prevent the generation of excessive flow noise cause by turbulent flow in piping systems adjacent to sensitive areas, fluid pressure should be in the range of 276 to 345 kPa. In larger facilities where high-pressure main supply lines are required, pressure regulators should be used in the supply branches at each floor to maintain the fluid pressure within the above limits. High-velocity flow in the piping system also produces turbulent flow and high noise levels. In piping runs adjacent to acoustically critical areas, such as conference rooms and patient rooms, the maximum flow velocities should not be exceeded.

The use of short air-filled branch pipes or stubs to control water hammer is not effective since the entrapped air in the stubs gradually dissolves into the water. The most efficient means of preventing water hammer is to install one of the mechanical devices manufactured for this purpose, which employs a gas-filled stainless steel bellows to absorb the shock of the hydraulic waves by mechanical compression of the bellows. These devices are available in a variety of sizes to accommodate most fixture sizes used in buildings. Another method for preventing water hammer in piping systems is to install spring-actuated or relief valves that prevent the instantaneous closure of the valve.

Steam pressure-reducing stations and other major pressure control devices can generate significant noise within mechanical rooms. Design documents should require valve manufacturers to meet a specified noise criterion with the possible use of noise suppressors. Steam pressure-reducing valves should be selected for reduced noise generation to meet design criteria. Noise suppressors should be

installed when required. Acoustical attenuation adjacent to the reducing station should also be considered.

Electrical conduit connections to all isolated equipment should be made so they do not short-circuit the resilient connections. Conduits less than 25 mm in diameter should be made using flexible conduit sections forming a grossly slack connection. Larger sized connections should be made with manufactured flexible fittings.

Cooling towers on top of buildings should be placed above the roof on an independently supported steel framework. Cooling towers with large, slow propeller fans require vibration isolators with much larger, higher deflection springs than comparably sized towers with centrifugal fans. For multiple- or variable-speed equipment, the isolator critical frequency should be one-half of the slowest equipment frequency (60 rad/s). For example, a cooling tower may have a maximum speed of 12 rad/s and a minimum speed of 4 rad/s, or 40 Hz. The isolator critical frequency for that cooling tower should be less than 20 Hz.

F.3.13 Noise Control for Electrical Equipment:

- **Elevators.** Both hydraulic and traction elevators may be the cause of disturbing noise and vibration problems and should be evaluated during design. Hydraulic elevators should have the motor/tank/pump assemblies mounted on neoprene isolators that achieve at least 9 mm deflection. Hydraulic piping should be resiliently isolated from the building. Neoprene pad isolators should be used at pipe sleeves, pipe supports, and pipe hangers. For traction elevators, the motor/winch lifting assemblies and motor/generator sets should be isolated from the structure with constrained neoprene isolators that achieve a minimum deflection of 9 mm. Electrical connections to the isolated equipment should not short-circuit the isolation and should employ flexible conduits or fittings previously noted.
- **Electric Transformers and Dimmer Banks.** Transformers and dimmer banks may be sources for both noise and vibrations. Large utility distribution transformers may be a noise problem in the surrounding community because of the pure tone noise or “hum” associated with them. Smaller distribution transformers inside a building should be isolated from noise-sensitive spaces. Neoprene pads or hangers should be used to attenuate structure-borne vibrations.

- **Variable-Speed Drives (VSDs).** Three basic types of variable-frequency drives can be used with HVAC equipment:
  - Current-source inverter type
  - Voltage-source inverter type
  - Pulse-width modulation (PWM) type

The current-source type is usually the quietest. With voltage-source inverter types, generally the driver units themselves represent the noisiest source. PWM types generally make the motors on the equipment served most noisy while the drive units themselves may be very quiet. For the PWM type, drive units and motors should be compatibly matched.

F.3.14 Community Noise: During design, it is important to realize that noise created by the mechanical systems propagates outside the building, as well as inside. When the site is chosen, the location of nearby noise-sensitive neighbors should be considered. Most often these are residences, but churches, hotels, schools, and dormitories should not be neglected. There may be noise codes that apply and provide specific criteria that may not be exceeded. However, it may be desirable to use a "good-neighbor" policy and keep the noise level at or below the existing ambient condition. That level may be quite low at night, so some judgment must be used in establishing what will be considered satisfactory levels.

Several types of equipment may cause noise problems outside a building, as well as inside. The most common are emergency generators, cooling towers, roof fans, rooftop condensing units, and so on, which, if located outside, can be a problem if they are numerous or large enough. An area that is often overlooked is the exterior connection of a laboratory's supply and exhaust fans. These fans are usually quite noisy, and the connections to the outside are generally quite short. It is important to identify significant sources early in design. These noises are most commonly treated with duct silencers or acoustical barriers.

F.4 Mechanical Equipment Location and Access

The project engineer should ensure that all mechanical equipment room layouts are designed to facilitate easy, quick, and safe maintenance access and replacement of system components and housekeeping. Equipment room layouts should be designed using the largest physical dimensions possible for all specified equipment. All manufacturer's specified items should fit within the allocated space.

When spacial restrictions and weight restrictions exist in equipment areas, maximum equipment dimensions and weights should be indicated on the contract documents. The NIH requires a high level of reliability from its equipment and rapid repairs when it is out of service because of operational failure. Installation of the equipment on the rooftops exposed to weather compromises the long-term reliability and can make repairs of the equipment dependent on the weather. Where possible, all equipment should be installed in mechanical rooms of adequate size to service the equipment.

Placement of equipment outside mechanical rooms must permit access from non-restricted, uncontaminated areas. Systems must be accessible for maintenance 24 hours per day, 7 days per week. Equipment requiring frequent service should not be installed in occupied rooms or above ceilings in working areas unless it is unavoidable because of space configuration, and efforts should be made to locate it in the traffic areas of the occupied space.

System plenums and casings should be designed to permit maintenance, cleaning, and replacement of all system components without disassembly of the casing. Fan replacements may be accommodated through removable casing sections. Where possible, motors, drives, lubrication devices, valves, traps, and so on should be located exterior to the plenums and casings for ease of maintenance. In no case shall motors and drives or other components requiring regular service be located within an exhaust airstream.

Easy, quick, and safe access to building utilities such as piping, valves, electrical switches, and circuit breaker panels should be provided. All valves and switches should be properly identified in accordance with the governing codes and standards. Operation and maintenance (O&M) manuals for all mechanical supplied equipment on the project are required and should be called for in the specifications. A meeting shall be specified to turn over the equipment inventory and O&M manuals to the Office of Research Facilities (ORF).

Systems should be designed in accordance with the following principles:

- Systems should be selected with minimal mechanical components requiring service and maintenance.

- System components requiring frequent service and maintenance should be located in equipment rooms or service areas and not above suspended ceilings or in occupied spaces.
- Clear and safe access should be provided for servicing, removing, and replacing equipment.
- Sufficient instrumentation should be specified for measuring, indicating, monitoring, and operating at part load as well as full load.
- Equipment should be selected for long-term durability, reliability, maintainability, and serviceability.
- Equipment should not be located in confined, or with an access through, secured spaces.
- Main service isolation valves should not be located close to the mechanical room entrance so that mains may be secured safely in the event of a system failure.
- The building design should define installation zones for piping, ductwork, conduits, cable trays, and lighting so that access to all serviceable components is clearly defined and shown on the zoning diagrams as part of the construction documents.
- All environmental room air-conditioning components must be located to accommodate service from outside the plan area of the room. Temperature and humidity sensors may be located within the rooms. Condensing units must not be located directly above the room.

F.5 Systems Identification

A complete identification system shall be provided for all mechanical and electrical systems/equipment that conforms with the requirements published in ANSI Standard 13.1. In existing buildings, coordinate with the existing system of identifications that may be in compliance with NFPA and NIH Specification 15011. Equipment and valves identification and numbering shall be coordinated with the ORF.

All control devices, i.e., panels, switches, starters, pushbutton stations, relays, temperature controls, and so on, should be clearly identified as to their function and the equipment controlled. All equipment such as pumps, fans, heaters, and so on should be marked to clearly identify the equipment and space or duty they serve. Equipment shall be identified using engraved, laminated black-and-white phenolic legend plates. Letters should be white on surrounding black at least 19 mm high.

Piping shall be identified with colored, prerolled, semi-rigid plastic labels set around pipes with a field-installed high-strength cement compound applied along their longitudinal edge. Labels shall be placed around the piping or insulation every 9 m and with one label on each pipe in rooms smaller than 4.5 m and on each side of penetrated wall/floor. A label shall be placed at every major valve at least 1.8 m from exit or entrance to an item of equipment and at each story traversed by the piping system. **Exposed piping in mechanical rooms shall have full-color coding. Fire protection piping shall have full-color coding in all locations.**

Labels shall have at least 19 mm-high black letters for pipes 25 mm and larger, and 13 mm letters for smaller pipes. All labels shall have flow arrows. Color-coding and stencil designations shall be in accordance with ANSI Standard 13.1. Where items requiring routine service are concealed above ceilings or behind access doors, a suitable and visible label should be attached to the surface to identify the location of such items. In no case shall piping be identified with generic terms, i.e., “cold water,” “hot water,” and so on. Instead, identification should be system specific, i.e., “potable or domestic cold water,” “Industrial or Laboratory Cold Water,” “Plant Air,” and so on. Each lab water outlet should be provided with a laminated identification sign that reads “Laboratory Water—Do Not Drink.” Similar signage should be provided for use at ice machines in laboratories and water faucets on nonpotable water systems.

All valves shall be provided with colored plastic, brass, or aluminum valve tags with stamped-in numbers. Tags shall be secured to the valve with a metal chain. Stop valves on individual fixtures or equipment where their function is obvious, or where the fixture or equipment is immediately adjacent, need not be so equipped. Care should be exercised in scheduling and selecting valve numbers. The number sequence should be specific and continuous with individual piping services; that is, domestic water system valves are always identified as 1.1, 1.2, 1.3, and so on, and other distinctly different piping systems should have another number series. Schematic drawings of each floor should show the approximate locations, identity, and function of all tagged service and control valves. One copy of each drawing and schedule should be mounted under glass where directed. A copy of each drawing and schedule should also be included as a part of the operations and maintenance manuals. Valve tags shall be at least 40 mm round tags with white characters describing the system and valve designation. **Fire protection and fire alarm systems shall be identified as required by NFPA standards and NIH Standard Specifications.**

Medical/lab gas piping systems should be readily identifiable by appropriate labeling with metal tags, stenciling, stamping, or adhesive markers. Color coding should be used in accordance with NIH Standard Specifications.

F.6 Piping Systems

This section is intended to define the general installation requirements for the numerous piping systems installed at the NIH. Many codes govern the actual sizing and installation of piping and should be used during the design process. Welding shall conform to current standards and recommendations of the National Certified Pipe Welding Bureau and all Occupational Safety and Health Administration, State fire protection, and NFPA Standard 241 requirements. Pipe and fittings shall be specified to meet one of the numerous industry standards such as ANSI, ASTM, AWWA, and so on and should be suitable for the operating temperatures and pressures to be encountered on the project. The project engineer, when deemed necessary, shall provide pipe stress analysis to the NIH.

Piping and conduits, except electrical conduits run in floor construction, shall be designed to run parallel with the lines of the building. Electrical conduits shall not be hung on hangers with any other service pipes. The different service pipes, valves, and fittings should be installed so that, after the covering is applied, there will not be less than 13 mm clear space between the finished covering and other work and between the finished covering and parallel adjacent pipes. Hangers on different service lines, running parallel with each other and nearly together, should be in line with each other and parallel to the lines of the building. The minimum pipe size shall be 19 mm for plumbing systems and HVAC systems, and 32 mm for fire protection systems. Size reductions may occur only immediately adjacent to equipment connections. Valves and specialties serving equipment should be full pipe size, not the reduced equipment connection size except where engineering calculations necessitate a different size. Hangers should be spaced to prevent sag and permit proper drainage of piping. Hangers should be spaced not more than 2.4 m apart, unless a greater spacing is specifically designed. A hanger should be placed within 300 mm of each horizontal elbow.

Materials and application of pipe hangers and supports shall conform to the latest requirements of ANSI/ASME B31.1 or ANSI/ASME B31.9 and MSS Standard Practice SP-58, SP-69, and SP-89, and appropriate Federal specifications where applicable. All materials and anchorage methods for installations in Seismic Zones 3 and 4 shall comply with local building code requirements and shall utilize materials and methods as approved by the local body governing the jurisdiction.

Vertical runs of pipe and conduit less than 4.6 m long should be supported by hangers placed 300 mm or less from the elbows on the connecting horizontal runs. Vertical runs of pipe and conduit over 4.6 m long, but not over 18.3 m long, and not over 150 mm in size, shall be supported by heavy steel clamps. Clamps should be bolted tightly around the pipes and conduits and should rest securely on the building structure without blocking. Clamps may be welded to the pipes and placed below coupling. In lieu of individual hangers, multiple (trapeze) hangers for accessible piping should be considered for water pipes having the same elevation and slope and for electrical conduits. Each multiple hanger should be designed to support a load equal to the sum of the weights of the pipes, conduits, wire, and water and the weight of the hanger itself, plus 90 kg. The structural engineer must approve the structural loads caused by installation of large-diameter piping (200 mm and larger). Safety factors shall be in accordance with ANSI/ASME B31.1. Loading on anchors shall not exceed 25 percent of the proof load test. The size of the hanger rods should be such that the stress at the root of the thread will not be over 68 950 kPa at the design load. No rod should be smaller than 9 mm. The size of the horizontal members should be such that the maximum stress will not be over 103 425 kPa design load. Where vertical piping is specified to extend through sleeves, the riser clamp or pipe support shall transverse the sleeve directly to structure. Allow for differing rates of expansion and contraction of piping systems. Do not anchor piping of substantial operating temperature differences to the same hanger. Trapeze hangers supporting large-diameter piping (200 mm and larger) shall be placed to load joists at top panel points only.

Plastic piping shall be installed to permit proper movement and prevent stresses from expansion and contraction, as well as to protect from damage to piping from abrasion.

Fireproofing shall not be damaged by installation of any hanger or attachment. Where existing fireproofing is disturbed, it shall be restored as approved by the NIH Fire and Safety Officer.

Steam, condensate, and other hot service piping should be designed with loops, bends, and offsets to allow for thermal expansion and keep stresses within the allowable limits of the piping material. **Expansion joints or ball joints should be avoided if possible.** Roller-type pipe supports should be specified where significant horizontal pipe movement will occur as a result of thermal expansion, and spring-type supports shall be specified where significant vertical movement will occur and where vibration isolation is critical.

Piping should be designed and installed without due stress or strain and run parallel to the lines of the building, except to grade them as specified in a neat and workmanlike manner using a minimum of fittings. Specify provision of thrust restraints to prevent pipe blowout or joint separation due to test procedures or system thrust loads. Such fittings, valves, and accessories should be designed as may be required to meet the conditions of installation and accommodate service. All piping systems, materials, valves, joining methods, and components shall be suitable for the application, location, size, and working pressure of the system at the design operating pressure. Piping should be designed to suit the necessities of clearance with ducts, conduits, and other work and so as not to interfere with any passages or doorways and allow sufficient headroom at all places. No piping should penetrate ductwork.

Gas-piping systems and other hazardous services should be designed in strict compliance with applicable codes and standards. Gas vents, relief valves, rupture disc, and so on shall be piped safely outdoors. Overflow pipes, system drains, and relief devices should be piped to suitable drainage facilities and indirectly connected. Certain pieces of equipment may have high discharge rates that can quickly result in flooding. Drains, sumps, or other receiving devices must have the storage volume required.

Unions or flanges on each side of all pieces of equipment and other similar items should be designed in such a manner that they can be readily disconnected. Union flanges shall be placed in a location that will be accessible after completion of the project.

The project engineer should specify testing procedures in the commissioning guide/plan developed for all components installed on the project. Test procedures should include all items required by code and be sufficient to prove all systems tight

at conditions that exceed the maximum design conditions. Water sampling to establish a treatment plan, pipeline sterilization, positive pressure, and vacuum testing may be included as part of the procedures.

Pipe and fittings for NIH buildings shall be as defined in Table F.6.

Table F.6 Pipe Assembly

Service		Abbreviation	Color Code	Pipe	Fitting	Joints
1.	**Sanitary Drainage**	SAN	Green			
a.	Underground and aboveground 1. Pipe 375 mm and smaller (except kitchen or grease waste) 2. Pipe 450 mm and larger			A A/B[1] C	I I, II III	a a b
b.	Aboveground within building (optional) 1. Pipe 375 mm and larger (except kitchen and grease waste)			D	IV	c
c.	Aboveground within building (optional) (except kitchen, urinal, and grease waste)			Q	VIII	e
d.	Vent piping	SANv		B	II	b
e.	Vent pipe (optional) 1. Sanitary vent piping 2. Sanitary vent piping	SANv		 D Q	 IV VIII	 d e
f.	Aboveground trap arms and indirect waste	SANv		D	VIII	c
g.	Aboveground trap arms and indirect waste (except urinals, water closets, blood analyzers, and corrosive waste)	SANv		Q	VIII	e
h.	Sanitary waste for large-animal areas (optional)	SAN		K	XIV	f
i.	Underground sanitary trap primer lines	SAN		R	XVIII	e/l
j.	Aboveground sanitary trap primer lines	SAN		R	XVIII	e
k.	Pumped sanitary waste 100 mm and smaller	SAN		Q	XVIII	e
l.	Pumped sanitary waste aboveground and underground 150 mm and larger	SAN		C	III	e
m.	Pumped sanitary waste aboveground all sizes	SAN		AA	IX	k
n.	Vapor vents from oil interceptors	SANv		D	IV	c

Service		Abbreviation	Color Code	Pipe	Fitting	Joints
2.	**Kitchen Waste and Grease Waste**	SAN	Green			
	1. Underground 2. Underground (option) 3. Aboveground waste and vent 4. Aboveground waste and vent (option 1) 5. Aboveground waste and vent (option 2) 6. Aboveground vent (option 1) 7. Aboveground vent (option 2) 8. Aboveground exposed waste, traps, and trap arm	SAN SAN/SANv		E F B[3] E F/G D Q Q[4]		g/h I a g/h I d e e
3.	**Laboratory**	SAN, LW, LV	Green			
	1. Underground waste (option 1) 2. Underground waste (option 2) 3. Aboveground waste and vent 4. Aboveground waste and vent (option 1) 5. Aboveground food service area			E H J[5] E E, I, J[6]	V X XI V V/IX/XII	g/h m/p n g/h g, h, m, o, p
a.	Underground acid waste trap primer lines			I, K, L, FF	XIII	q
b.	Aboveground acid waste trap primer lines			I and FF	XIII	q
c.	Pumped acid waste			H	X	m
d.	Corrosive indirect waste			I, K, L, FF	XIII	q
4.	**Photo-Processing Drainage and Vent**	PPD, PPL	Green			
	1. Underground waste and vent 2. Underground waste and vent (option 1) 3. Aboveground waste and vent			E H[7,8] E	V X V	g/h m/p g/h
5.	**Biohazardous Waste and Vent**	BW, BV	Green			
a.	1. Underground waste[6] 2. Underground waste (option 1) 3. Underground waste (option 2) 4. Underground and aboveground waste (option 1)			H H J[9] M[10]	X X XI XV	m m n r
b.	Aboveground waste (option 1) Aboveground waste (option 2)[1] Aboveground waste (option 3)[11]			N[7] N[11,7] J[12]	X X XI	m m/p n

Service		Abbreviation	Color Code	Pipe	Fitting	Joints
6.	**Stormwater and Miscellaneous Clearwater Waste**	SW, D	Green			
a.	Underground 375 mm and smaller 1. Option 1 2. Option 2 Underground 450 mm and larger			 A B O[1]	 I II XVI	 a a b
b.	Aboveground 375 mm and smaller 1. Option 1 2. Option 2 3. Option 3			 D A Q	 IV I VIII	 c a e
c.	Pumped storm and clearwater drain 100 mm and smaller Pumped storm drain above and below ground 150 mm and larger All sizes			Q O AA	VIII XVI IX	e j k
d.	Stormwater and clearwater drain lines above food service area			Q[6]	VIII	e
7.	**Foundation Drain/Subsoil Drainage**	FD	N/A	P	XVII	s
8.	**Condensate Drain**	CD	Yellow	Q	VIII	e
9.	**All Lab Drainage and Vent Piping Above Food Service Areas**	N/A	Green	E,I,J	V,XI, XII	g/h/o/m /p
10.	**Incoming Water Service**	CW	Green			
a.	Aboveground incoming service - 65 mm through 100 mm			T	XVIII	I
b.	Aboveground incoming service - 100 mm and larger			V	XIX	u/v
c.	Underground incoming service - 75 mm and larger			X	XXI	t
d.	Underground incoming service - 75 mm and smaller			U[13]	XVIII	I
11.	**Domestic Cold Water**	CW	Green			
a.	Aboveground 65 mm and smaller 75 mm through 200 mm 200 mm and larger 1. Option 1 2. Option 2			 T T W Y	 XVIII XVIII XX XXII	 w I 2 V r/x

Service		Abbreviation	Color Code	Pipe	Fitting	Joints
b.	Underground 65mm and smaller[13]			 U	 XVIII	 I
12.	**Domestic Hot Water/Tempered Water**	HW	Yellow			
a.	Aboveground 65 mm and smaller 75mm through 150 mm			 T T	 XVIII XVIII	 W I
13.	**Drinking Water**	DW	Green	T	XVIII	w
14.	**Laboratory Cold Water**	LCW	Green			
a.	Aboveground 65 mm and smaller 75 mm through 200 mm 200 mm and larger 1. Option 1 2. Option 2			 T T V Y	 XVIII XVIII XIX XXII	 w I u/v r/x
b.	Brass nipples and fittings			Z[14,15]	XXII	k
15.	**Laboratory Hot Water**	LHW	Yellow			
a.	Aboveground 65 mm and smaller 75 mm through 200 mm 200 mm and larger 1. Option 1 2. Option 2			 T T Y W	 XVIII XVIII XXII XX	 w I r/x v
b.	Brass nipples and fittings			Z[14,15]	XXIII	k
16.	**Laboratory Hot Water Circulating**	LHRW	Yellow			
a.	Aboveground 65 mm and smaller 75 mm through 150 mm			 T T	 XVIII XVIII	 w I
17.	**Purified Animal Drinking Water**	ADW	Green			
	1. Option 1 2. Option 2			BB CC	XXIV XXV	y z
18.	**Softened Water**	SW	Green			
a.	Aboveground 65 mm and smaller 75 mm through 150 mm			 T T	 XVIII XVIII	 z I
19.	**Deionized Water**	DI	Green	DD	XXVI	aa
20.	**Distilled Water**	DIS	Green	EE	XXXII	bb
21.	**Reverse Osmosis Water**	ROS/ROR	Green	EE	XXXII	bb

Service		Abbreviation	Color Code	Pipe	Fitting	Joints
22.	**Chilled Water Supply and Return**	CHWS/ CHWR	Green			
a.	700 mm and larger			MM	XXIX	m
b.	300 mm through 600 mm			KK	XXIX	m
c.	65 mm through 250 mm			ii	XXIX	m
d.	65 mm to 150 mm (optional)			ii Q	XXXIII	h d
e.	50 mm and smaller			ii	XXVIII	jk
f.	50 mm and smaller (optional)			T	XVIII	e
23.	**Secondary Chilled Water Supply and Return**	SCHWS/ SCHWR	Green			
a.	300 mm and larger			KK	XXIX	r
24.	**Chilled Water Supply and Return**	CHWS/ CHWR	Green			
a.	700 mm and larger			MM	XXIX	r
b.	300 mm through 600 mm			KK	XIII	r
c.	65 mm through 250 mm			ii	XXIX	r
d.	65 mm to 150 mm (optional)			T	XVIII	E/l d
e.	50 mm and smaller			ii	XXVIII	k
f.	50 mm and smaller (optional)			T	XVIII	e
25.	**Secondary Chilled Water Supply and Return**	SCHWS/ SCHWR	Green			
a.	300 mm and larger			KK	XXIX	r
b.	125 mm through 250 mm			ii	XXIX	r
c.	100 mm and smaller			T	XVIII	e
26.	**Glycol Water Supply and Return**	GWS/GWR	Green			
a.	65 mm and larger			ii	XXIX	r
b.	65 mm to 125 mm (optional)			ii	XXXIII	ff
c.	50 mm and smaller			ii	XXVIII	k
d.	50 mm and smaller (optional)			KK	XVIII	e
27.	**Condenser Water Supply and Return**	CWS/CWR	Green			
a.	300 mm and larger			KK	XXIX	r
b.	65 mm through 250 mm			ii	XXIX	r

Service		Abbreviation	Color Code	Pipe	Fitting	Joints
c.	65 mm and larger (optional)			ii	XXXIII	ff
28.	**Cooling Water Supply and Return (Process Cooling)**	CS/CR	Green			
a.	125 mm and larger			ii	XXIX	r
b.	100 mm and smaller			T	XVIII	e
29.	**Heating Water Supply and Return**	HWS/ HWR	Yellow			
a.	300 mm and larger			KK	XXIX	r
b.	65 mm through 250 mm			ii	XXIX	r
c.	50 mm and smaller			ii	XXVIII	ff
d.	50 mm and smaller (optional)			T	XVIII	e
e.	50 mm and smaller (optional)			T	XVIII	e
30.	**Heat Recovery Supply and Return**	HRS/HRR	Yellow			
a.	300 mm and larger			KK	XXIX	r
b.	65 mm through 250 mm			ii	XXIX	r
c.	50 mm and smaller			ii	XXVIII	k
d.	50 mm and smaller (optional)			T	XVIII	e
31.	**Secondary Heating Water Supply and Return**	SHS/SHR	Yellow			
a.	300 mm and larger			KK	XXIX	r
b.	125 mm through 250 mm			ii	XXIX	r
c.	100 mm and smaller			T	XVIII	e
32.	**Steam Supply (175 psi Maximum)**	HPS/ MPS/LPS	Yellow			
a.	300 mm and larger			KK	XXIX	r
b.	65 mm through 250 mm			ll	XXIX	r
c.	50 mm and smaller			ll	XXXIV	k
33.	**Steam Vents**	SV	Yellow			
a.	65 mm and larger			ii	XXIX	r
b.	50 mm and smaller			ii	XXXIV	k
c.	50 mm and smaller (optional)			ii	XXXV	r
34.	**Steam Condensate**	HPR/ MPR/LPR	Yellow			
a.	65 mm and larger			JJ	XXIX	r
b.	50 mm and smaller			JJ	XXXIV	k

Service		Abbreviation	Color Code	Pipe	Fitting	Joints
c.	50 mm and smaller (optional)			JJ	XXXV	r
35.	**Pump Condensate**	PC	Yellow			
a.	65 mm and larger			JJ	XXXVI	r
b.	50 mm and smaller			JJ	XXXIV	k
c.	50 mm and smaller (optional)			JJ	XXXV	r
36.	**Steam Instrumentation**	SI	Yellow			
a.	50 mm and smaller			ii	XXXIV	k
b.	50 mm and smaller (optional)			ii	XXXV	r
37.	**Blow-Down**	BD	Yellow			
a.	50 mm and smaller			ii	XXXIV	k
b.	50 mm and smaller (optional)			ii	XXXV	r
38.	**Feedwater**	FW	Yellow			
a.	65 mm and larger			ii	XXIX	r
b.	50 mm and smaller			ii	XXXIV	k
c.	50 mm and smaller (optional)			ii	XXXV	r
39.	**Makeup Water**	MW	Green	T	XVIII	e
40.	**Oxygen**	O2	Yellow /Blue			
a.	Aboveground			GG	XXVII	cc
b.	Underground			HH[16]	XXVII	cc
41.	**Nitrogen and Vent**	N2	Green/ Black			
a.	Standard pressure			GG	XXVII	cc
b.	High pressure			HH	XXVII	cc
42.	**Nitrous Oxide and Vent**	NO2	Black/ Blue	GG	XXVII	cc
43.	**Carbon Dioxide and Vent**	CO2	Yellow			
a.	Aboveground			GG	XXVII	cc
b.	Underground			HH[16]	XXVII	cc
44.	**Helium**	HE	Brown	GG	XXVII	cc
45.	**Medical Air**	MA	Yellow	GG	XXVII	cc
46.	**Medical Vacuum**	MV	White	GG[17]	XXVII	l
47.	**Laboratory Air**	LA	Yellow	GG	XXVII	cc
48.	**Laboratory Vacuum and Vent**	LV	Yellow	Q	XVIII	l

Service		Abbreviation	Color Code	Pipe	Fitting	Joints
49.	**Gas Evacuation**	GE	Yellow	GG	XXVII	l
50.	**Animal Air**	AA	Yellow	GG	XXVII	cc
51.	**Animal Vacuum**	AV	Yellow	GG[17]	XXVII	i
52.	**Animal Oxygen**	O_2 A	Yellow/ Blue	GG	XXVII	cc
53.	**Acetylene/Acetylene Mixtures**	C_2H_2	Yellow	ii	XXVII	l
54.	**Fuel Supply**	FOS/FOR	Yellow			
a.	65 mm and larger			ii	XIII	r
b.	50 mm and smaller			ii	XV	k
55.	**Fuel Oil Vent**	FOV	Yellow	ii	XIII	r
56.	**Natural Gas**	NG	Yellow			
a.	Aboveground 14 kPa (2 psi) and less, size 65 mm and smaller 14 kPa (2 psi) and less, size 75 mm and larger 35 kPa (5 psi) and greater Underground – outside building Exposed fume hood and laboratory Equipment connections			 ii[18] ii[18] ii[18] N ii/oo	 XXVIII XXIX XXIX XXX XXVIII XXXI	 k r r dd k/ee
57.	**Compressed Air[19]**	CA	Blue	Q,T,G G HH	XVIII XXVII	l
58.	**Dental Vacuum**	DV	Yellow			
a.	Aboveground and underground 1. Option 1 2. Option 2			 Q K	 VIII XIV	 e f
59.	**Refrigerant Piping**	RS/RL	Yellow			
a.	65 mm and larger			ii	XXIX	m
b.	50 mm and smaller			T	XVIII	gg
60.	**Refrigerant Relief**	RR	Yellow	ii	XXIX	r
61.	**Generator Exhaust**	N/A	N/A	ii	XXIX	r

Notes:

1. Hub may be cut off below ground and extra heavy pipe extended above grade for appropriate transition adapter to aboveground material. (This allows pipe to fit in standard walls and chases.)

2. Insulate lines from condensation. Provide with double containment, PVC, or flame-retardant polypropylene, minimum thickness of SDR-33, watertight joints to 10 psi.
3. Do not use this material for waste lines from soda fountains.
4. Do not use for floor sink and floor drain traps or trap arms.
5. Glass shall not be used for vents through roof.
6. Provide PVC or flame-retardant polypropylene double containment, minimum thickness of SDR-33, and capable of 10 psi.
7. Not recommended for BSL-4.
8. Provide double containment, minimum thickness SDR 33 polypropylene or PVC. Not recommended for BSL-4.
9. Provide with double containment, minimum SDR 33 polypropylene or PVC. Provide with leak monitoring cable for BSL-4.
10. Provide double containment, minimum Schedule 5, ASTM A312 Type 316 Schedule 5 Stainless Steel. Provide with leak monitoring cable for BSL-4.
11. Provide with double containment, minimum SDR 33 polypropylene or PVC. Provide with leak monitoring cable.
12. Provide with double containment and leak monitoring cable for BSL-4. Glass shall not be used for vents through roof.
13. No joints permitted below building slab.
14. NIPPLES: Red Brass Schedule 40, ANSI B687, regular or extra strong.
15. Fittings: CHROME PLATING for finished locations: ASTM B456.
16. Provide continuous schedule 40 PVC sleeve, with minimum 100 mm concrete encasement and metallic warning tape at sleeve and again halfway between initial backfill and finished grade.
17. The use of uncleaned pipe and fittings shall be permitted only where special variance is granted in response to an acceptable plan presented by the contractor to prevent possible misuse of the vacuum system materials on a medical gas system.
18. Pipe and fittings shall be provided with protective coating for installation in corrosive environments and exterior installations, Skotchkote, Greenkote epoxy coating or minimum two coats rust-inhibiting paint.
19. Select as required based on system application, pressure, and cleanliness requirements.

F.6.1 Piping Material:

Pipe material designation indicated in Table F.6, Pipe Assembly, shall conform to the specifications in Table F.6.1.

Table F.6.1 Piping Material Specifications

Designation	Pipe Specifications
A	Cast iron hub and spigot pipe, service weight, ASTM A74.
B	Cast iron hub and spigot, extra heavy weight, ASTM A74.

Designation	Pipe Specifications
C	Ductile iron Class 53, ASTM A746 with fusion-bonded epoxy or ceramic epoxy interior lining.
D	Cast iron hubless pipe, ASTM A74, ASTM A888, CISPI 301.
E	High silicon iron pipe, ASTM A518, ASTM A861.
F	Stainless steel waste pipe, Type 316L, ANSI A112.3.1.
G	Stainless steel waste pipe, Type 304L, ANSI A112.3.1 (added product).
H	Polypropylene pipe, ASTM F1412, ASTM D4101, ASTM D618, ASTM D2447 Schedule 80.
I	Flame retardant polypropylene pipe, ASTM F1412, ASTM D4101, ASTM D618, ASTM D635, ASTM D2843, Schedule 40 (added proper standards for this material).
J	Borosilicate glass pipe, ASTM C1053.
K	Polyvinyl chloride pipe, ASTM D1785 or ASTM D2665 dual stamped Schedule 40. Cellular core or foam core not accepted.
L	Polyvinyl chloride pipe, ASTM D1785 Schedule 80.
M	Stainless steel pipe, ASTM A312, Type 316 Schedule 40, seamless.
N	Flame retardant polypropylene pipe, ASTM F1412, ASTM D4101, ASTM D618, ASTM D2447, ASTM D635, ASTM D2843.
O	Ductile iron pipe, Class 53, ASTM A746.
P	Porous concrete pipe, AASHTO M-176.
Q	Seamless copper tube, ASTM B88, Type L Hard.
R	Seamless copper tube, ASTM B88, Type L Soft.
S	Not used (reserved)
T	Seamless copper tube, ASTM B88, Type K Hard.
U	Seamless copper tube, ASTM B88, Type K Soft.
V	Ductile iron pipe, cement lined, ANSI/AWWA C150, C151, AWWA C104, ANSI A21.4, Class 53, Universal Phenolic exterior with TNEMEC 37H-77 primer, all materials NSF-61 compliant.
W	Ductile iron flanged pipe, cement lined, ANSI/AWWA C150, C151, AWWA C104, ANSI A21.4, AWWA C115, Class 53, suitable for operation to 212 °F, Universal Phenolic exterior with TNEMEC 37H-77 primer, all materials NSF-61 compliant. Piping for hot water shall not have sealcoat.

Designation	Pipe Specifications
X	Ductile iron pipe, cement lined, ANSI/AWWA C150, C151, AWWA C104, ANSI A21.4, Class 53, AWWA C105 8-mil polyethylene encasement.
Y	Stainless steel pipe, Type 316L, Schedule 10 or Schedule 40, ASTM A312, ASTM A778. Schedule 40 should be utilized for systems with low water velocities. Minimum 0.61 m/s velocity for any stainless steel piping system.
Z	Brass pipe and nipples ASTM B43, ANSI B687 seamless regular or extra-strong, ASTM B456 chrome plating for finished locations.
AA	Galvanized steel pipe, ASTM A53 or ASTM A106, Grade B, Type S, ASTM A123/A153 Schedule 40.
BB	CPVC pipe, ASTM F441, Class 23447B, Type IV, Grade 1, Schedule 40 or Schedule 80.
CC	Stainless steel sanitary tube, ASTM A270, ASTM A450, ANSI B36.19M, Schedule 10 electropolished 130 to 150 grit sanitary interior.
DD	Unpigmented polypropylene pipe, ASTM D4101, ASTM D2837, SDR 11, individual cap, sealed bag.
EE	As required by program requirements and required water quality.
FF	PVC, polypropylene, or stainless steel tubing as required by application (added product).
GG	Copper tube, cleaned and degreased for oxygen service, Type L hard, nitrogenized and ends capped. Any piping contaminated or not under nitrogen charge at time of installation not accepted. Type ACR not accepted.
HH	Copper tube, cleaned and degreased for oxygen service, Type K hard, nitrogenized and ends capped. Any piping contaminated or not under nitrogen charge at time of installation not accepted. Type ACR not accepted. Provide continuous sleeve and encasement for underground medical gas piping as directed under Piping Section.
ii	Black steel pipe, ASTM A53 or A106, (for generator exhaust ASTM A53 is not applicable) Grade B, Type S seamless Schedule 40.
JJ	Black steel pipe, ASTM A53 or A106 Grade B, Type S seamless Schedule 80.
KK	Carbon steel pipe, ASTM A53 or A106 (for high pressure steam ASTM A53 is not applicable) Grade B, Type XS, extra heavy wall seamless.
LL	Carbon steel pipe, ASTM A106, Grade B, Type XS extra heavy wall, seamless.
MM	Carbon steel pipe, API-5L Type DSAW, Grade B, 0.5 inch wall thickness double submerged arc-welded longitudinal seam.

Designation	Pipe Specifications
NN	Polyethylene fuel gas tube, ASTM D2513, ASTM 1784, Type II, Class B, Category 3, Grade P24. Minimum thickness of SDR 11.
OO	Steel fuel gas tubing, ASTM A539 electric resistance welded.

F.6.2 Fitting Materials:

Fitting material designations indicated in Table F.6, Pipe Assembly, shall conform to the specifications in Table F.6.2.

Table F.6.2 Fitting Materials Specifications

Designation	Specifications
I	Service cast iron hub and spigot, ASTM A74.
II	Extra heavy cast iron hub and spigot, ASTM A74.
III	Ductile iron, Class 53 ASTM A746 fusion-bonded epoxy or ceramic epoxy interior lining, drainage pattern.
IV	Cast iron hubless fittings, CISPI 301.
V	High silicon iron drainage pattern fittings.
VI	Type 316 stainless steel, drainage pattern, ANSI A112.3.1.
VII	Type 304 stainless steel, drainage pattern, ANSI A112.3.1.
VIII	Wrought copper and bronze drainage pattern fittings, ANSI B16.23, B16.29, or ANSI/ASME B16.32.
IX	Galvanized cast iron, Durham drainage pattern, ASTM A126, ANSI B16.12, ASTM A153.
X	Polypropylene drainage pattern, ASTM F1412, ASTM D4101, ASTM D618, ASTM D2447, ASTM D3311.
XI	Borosilicate glass drainage pattern, ASTM C1053.
XII	Flame-retardant polypropylene drainage pattern, ASTM F1412, ASTM D4101, ASTM D618, ASTM D2843, ASTM D635, ASTM D2447, and ASTM D3311.
XIII	Chemically resistant compatible with system pipe material and application.
XIV	Polyvinyl chloride, drainage pattern, ASTM D2665.
XV	Stainless steel ASTM A312 Type 316 Schedule 40 constructed to equivalent ASTM D3311 drainage fitting patterns.

Designation	Specifications
XVI	Ductile iron, Class 53 drainage pattern fittings, ASTM A746.
XVII	Porous concrete drainage fittings, ASTM C654, AASHTO M176.
XVIII	Wrought copper solder cup type fittings, ANSI/ASME B16.22 or B16.18.
XIX	Ductile iron cement lined, ANSI/AWWA C110, or C153, AWWA C104/ANSI A21.4, special thickness Class 53 or 1 724 kPa, Universal Phenolic exterior with TNEMEC 37H-77 primer, all materials NSF-61 compliant.
XX	Flanged ductile iron cement lined, ANSI/AWWA C110, or C153, AWWA C115, AWWA C104/ANSI A21.4, special thickness Class 53 or 1 724 kPa, Universal Phenolic exterior with TNEMEC 37H-77 primer, all materials NSF-61 compliant. Fittings for hot water shall not have seal coat.
XXI	Ductile iron cement lined, ANSI/AWWA C110, or C153, AWWA C104/ANSI A21.4 special thickness Class 53 or 1 724 kPa, all materials NSF-61 compliant, AWWA C105 8-mil polyethylene encasement.
XXII	Stainless steel mechanical groove joint, Type 316L, Schedule 10 or Schedule 40, ASTM A312, ASTM A778.
XXIII	Cast bronze pressure threaded pressure fittings, ANSI B16.5. Provide with ASTM B456 chrome plating for finished locations.
XXIV	CPVC Schedule 40 or Schedule 80, ASTM F439 Type IV, Grade I socket type, Schedule 80 threaded type.
XXV	Stainless steel sanitary fitting, Type 316, Schedule 10, electropolished sanitary interior 130 to 150 grit, ASTM A270, ASTM A450, ANSI B36.19M.
XXVI	Natural polypropylene, unpigmented ASTM D4101, ASTM D2839, furnished in sealed nitrogen-charged bag.
XXVII	Wrought copper solder cup type fittings, ANSI/ASME B16.22, factory cleaned and degreased for oxygen service. Factory nitrogenized and bagged, maximum 20 fittings per bag.
XXVIII	Black malleable iron threaded fittings, ANSI B16.3 for less than 517 kPa and 136 kg for 517 kPa or more.
XXIX	Steel butt weld fittings, ANSI B16.9, ASTM A234, long turn ells, ANSI B16.5 weld-neck or slip-on flanges and Bonney Forge **Weldlets** and threadlets, wall thickness to match pipe.
XXX	Polyethylene fuel gas fittings, ASTM D2683, ASTM D2513, Type II, Class B, Category 3, Grade P24, ASTM D1248 butt fusion or socket fusion.
XXXI	Swaglock fuel gas fitting to match piping application. Use only for final equipment connection at fume hoods and similar equipment.

Designation	Specifications
XXXII	As required by program requirements and required water quality.
XXXIII	Black malleable iron grooved fittings and couplings, ASTM A47.
XXXIV	Black cast iron threaded fittings, ANSI B16.4, 57 kg less than 517 kPa and 113 kg for 517 kPa and more. Steam condensate shall be 113 kg for all pressures.
XXXV	Black steel socket **weld** fittings, ANSI B16.11, wall thickness to match pipe.
XXXVI	Galvanized steel grooved fittings and couplings, ASTM A47M or ASTM A536. Note: Cut-groove type only. Roll-grooving not permitted for galvanized piping.

F.6.3 Joint Materials:

Joint material designations indicated in Table F.6, Pipe Assembly, shall conform to the specifications in Table F.6.3.

Table F.6.3 Joint Material

Designation	Joint Material
a	Premolded neoprene compression gasket to ASTM C564.
b	Compression gasketed (Tyton) joints or mechanical joints.
c	Heavy-duty shielded couplings meeting CISPI 310, with stainless steel shield and neoprene gasket. Couplings shall be minimum of 4-band type, unless FM1680 approved otherwise.
d	CISPI 310 stainless steel shielded neoprene coupling.
e	ASTM B32 lead-free soldered joints, noncorrosive flux.
f	Solvent cemented ASTM 2564 NSF listed cement and ASTM F656 NSF listed primer to IAPMO installation standard 9-95. “Hot” cements or wet-type fast dry cements shall not be utilized. Solvent cement joints only in dry ambient conditions, and cement type appropriate for ambient temperature and pipe size. (These full criteria important due to common poor installation and potential joint failures.)
g	Hub and spigot caulked type with acid resistant packing and molten lead in accordance with manufacturer requirements.
h	Mechanical joint type with Teflon seal, neoprene outer gasket, and stainless steel shield as provided by pipe and fitting manufacturer.
I	Elastomeric sealed socket type joint by pipe and fitting manufacturer.
j	Neoprene gasketed lock-ring type restrained joints by pipe and fitting manufacturer.

Designation	Joint Material
k	Threaded using American Standard for Pipe Threads, ANSI B2.1 with thread sealant or Teflon tape material especially listed compatible with system contents, pipe materials, and operating conditions.
l	BCUP 2, 3, 4, or 5 brazed joints.
m	ASTM D2657 socket fusion to practice method 1.
n	Mechanical joint type with Teflon seal, neoprene gasket, and stainless steel shield over bead to bead or bead to plain end where required.
o	ASTM F1290 electrofusion with stainless steel coil.
p	ASTM D2657 butt fusion method.
q	To match pipe material.
r	Butt weld to ANSI B31.1 and MCAA Part VII, Standard Procedure Specification Parts 1 and 2.
s	Tongue and groove, mortar sealed.
t	AWWA C111 mechanical joint with restraint fitting/retainer gland or approved neoprene gasketed restraint push on joint. Full restraint and thrust blocks. All bolts, nuts, and accessories AWWA compliant grade and type, Cor-Blue bolts and nuts.
u	AWWA cut groove method with NSF-61 listed gasket.
v	AWWA C115 flanged with AWWA C111 special gasket type, EPDM.
w	ASTM B32 lead-free solder with ASTM B813 water soluble flux.
x	Mechanical groove joint with galvanized steel or stainless steel coupling, NSF-61 listed EPDM gasket.
y	ASTM D2846, F-493 NSF listed solvent cemented joints with ASTM F656 NSF listed primer.
z	Sanitary butt weld, interior bead removed, or sanitary mechanical joint (clean joint). Infrared weld (IR butt fusion) or crevice-free butt weld.
aa	As required by program requirements and required water quality.
bb	BCUP 2, 3, 4, or 5 brazed joints without flux to NFPA 99 Level 1 system standards and ASSE series 6000 installation procedure, including clean, dry nitrogen purge.
cc	ASTM D2657 socket fusion or butt fusion only. Mechanical joints shall not be used.
dd	Swaglock fitting only at final connection to equipment.
ee	ASTM A183 coupling, nuts, and bolts, ASTM D2000 rubber gaskets for water service.

Designation	Joint Material
ff	AWS A5.8 Bag-5 with AWS Type 3 flux, except Type BcuP 5 or BcuP 6 may be used for copper to copper joints.
gg	Methods and materials for wet taps, where permitted by the NIH, should be submitted for approval by the A/E. Submittals should include documentation on the products to be used with complete instructions and procedures to ensure successful wet taps.

F.7 Insulation Systems

Insulation should be applied to mechanical systems to limit heat loss, prevent condensation, protect people from hot or extremely cold surfaces, and improve the operating efficiency of all systems. The value of proposed insulation systems should be justified by comprehensive life-cycle costing and present-worth analysis. Insulation materials approved for use in NIH buildings should have a fire hazard rating not to exceed 25 for flame spread and 50 for fuel contributed and smoke developed. All materials should be factory tested as an assembly. Fire ratings should be determined by the standard method of testing for surface-burning characteristics of building materials, ASTM E84 or NFPA Standard 255. Insulation approved for use shall have a UL label or a certified test report from an approved testing laboratory. **Insulation materials should not be installed on systems until all necessary tests have been conducted for each component and insulated surfaces have been thoroughly cleaned and are in a dry state.**

All adhesives, sealers, vapor barrier coatings, and so on used in conjunction with insulation should be compatible with the material to which they are applied. Any cement, sealer or coating used should be resistant to vermin and mold. All insulation surfaces should be durable and, where exposed, protected from damage due to maintenance operations, vandalism, weather, and normal wear and tear. Preformed insulation systems are preferred at pumps, valves, strainers, and access doors for ease of maintenance and to lower cost. Protective jackets consisting of 0.23 kg canvas or 0.41 mm aluminum shall be used for exposed insulation systems.

Pipe fittings and valves, where possible, should be protected using factory-premolded fittings, covers, and factory-protect insulation. Large valves and specialties should be protected using custom-made canvas jackets with straps and buckles to allow frequent removal and reinstallation without damaging the jacket. Metallic components used for the installation of insulation systems should be suitable

for the intended environment and should not corrode. Exposed external corners on duct and equipment insulation in occupied areas shall be protected by corner beads consisting of 50 x 50 x 0.41 mm-thick aluminum.

Insulation systems should be specified to meet industry standards, and installation requirements shall, as a minimum, include the following:

- Insulation should be continuous at all hangers, hanger rods, supports, sleeves, and openings. Vapor seals must be provided for all cold surfaces and should be continuous. Where supports must occur below the insulation surface, the thickness shall be maintained over the support and extend sufficiently beyond the support to prevent condensation. Insulation should be sealed where it terminates because of a valve, union, flange, and so on.
- All insulation should be arranged to permit expansion and contraction of systems without causing damage to the insulation or surface.
- The actual insulation thickness must be at least equal to the minimum specified at all locations, including supports in contact with cold surfaces.
- It is critical that insulation materials be installed in a first-class manner with smooth and even surfaces. Scrap pieces of insulation should not be permitted where a full-length section will fit.
- High-density pipe saddles or welded pipe standoffs should be provided at all points of pipe support.
- All valves and strainers shall be insulated, and premolded covers and factory-precut insulation or custom-fabricated jackets should be used where applicable. Unions and flanges shall not be insulated except on cold services.
- Valves should be insulated up to and including bonnets, except for cold water valves, which should be insulated over packing nuts in a manner to permit removal for adjustment and repacking.
- Strainers should be insulated to permit removal of the basket without disturbing the insulation of the strainer.
- On ductwork or equipment, accessories should be provided as required to prevent distortion and sagging of insulation. Welded pins, adhesive clips, and wire ties should be provided as recommended by the manufacturers and SMACNA.
- Duct and equipment insulation should cover all standing seams and metal surfaces with full-thickness insulation.

- Cold-water pumps should be insulated with removable and replaceable square or rectangular covers consisting of full 1.3 mm gauge aluminum metal jackets reinforced at corners and edges and lined with insulation. Pumps with split casings should be constructed with insulated housing in two or more sections with the upper section removable for access to the casing. Cover sections should be flanged, gasketed, and joined with stainless steel sheet metal screws. Lube fittings and drain valves should extend outside insulated covers.
- Where deemed necessary by the A/E, specific insulation details should be added to the contract documents to improve the insulation performance on the project.

Insulation may be omitted on the following items at the discretion of the A/E:

- Brass or copper pipe specified to be chrome plated (typically applies to toilet rooms)
- Traps and pressure-reducing valves, concealed relief piping from safety valves, and unions, flanges, and expansion joints on hot piping systems
- All fire protection and fuel piping
- Exposed ducts in air-conditioned spaces
- Existing adjacent insulation on alteration projects
- ASME stamps
- Access plates of fan housings
- Cleanouts or handholes
- Components within factory-preinsulated HVAC equipment
- Factory-preinsulated flexible ductwork
- Factory-preinsulated HVAC equipment
- Manufacturer's nameplates
- Vibration-isolating connections

F.7.1 Pipe Insulation:

Table F.7.1 defines the minimum insulation standards for NIH projects and is intended as a guide for the services listed and other similar services not indicated. The A/E should select the most suitable product for each individual service.

Table F.7.1 Insulation Material for Piping

Service	Material	Specifications	Type	Class	Vapor Barrier
Chilled water (supply and return, dual temperature piping, 4 °C nominal)	Cellular Glass Urethane	ASTM C552 ASTM C591	II	2	Yes Yes
Hot domestic water supply and recirculating piping (maximum 93 °C)	Cellular Glass Urethane Mineral Fiberglass	ASTM C552 ASTM C591 ASTM C547	II I	2	No Yes Yes
Cold domestic water piping above and below ceilings	Cellular Glass Urethane Mineral Fiberglass	ASTM C552 ASTM C591 ASTM C547	II I	2	Yes Yes Yes
Heating hot water (supply and return, maximum 121 °C)	Calcium Silicate Cellular Glass	ASTM C533 ASTM C552	I II	2	No No
Refrigerant suction piping (177 °C nominal)	Flexible Cellular Mineral Fiber	ASTM C534 ASTM C547	I	1	Yes Yes
Compressed air discharge, steam and condensate return (94 to 121 °C)	Cellular Glass Mineral Fiber Calcium Silicate	ASTM C552 ASTM C547 ASTM C533	II I	1	No No No
Drinking fountain, drain piping (to sewer tie-in)	Mineral Fiber Cellular Glass Flexible Cellular	ASTM C547 ASTM C552 ASTM C534	II I	1 2	Yes Yes Yes
Exposed lavatory drains, exposed domestic water piping and drains to areas for persons with disabilities	Preformed Fire Retardant, Anti-fungal, Closed Cell Foam Insulation Kit	ASTM C534	I		No
Horizontal interior storm drain and overflow drain piping, including transition fitting from vertical to horizontal, and underside of roof and overflow drain bodies	Mineral Fiber	ASTM C553	I	B-3	Yes
A/C condensate drain located inside building	Mineral Fiber Cellular Glass Flexible Cellular	ASTM C547 ASTM C533 ASTM C534	II I	1 2	Yes Yes Yes

Service	Material	Specifications	Type	Class	Vapor Barrier
Medium-temperature hot water, steam and condensate (122 to 177 °C)	Calcium Silicate Cellular Glass	ASTM C533 ASTM C534	I I or II		No No
Brine systems cryogenics (- 30 to 0 °C)	Cellular Glass Polyisocyanurate	ASTM C552 ASTM C591	II	2	Yes Yes
Brine systems cryogenics (0 to 34 °C)	Cellular Glass Polyisocyanurate	ASTM C552 ASTM C552	II	2	Yes Yes

F.7.2 Piping Insulation Thickness:

Table F.7.2 Piping Insulation Thickness

Service	Material	Tube and Pipe Size (mm)				
		6-32	40-80	90-125	150-250	280-400
Chilled water (supply and return) and dual temperature piping) (4 °C nominal)	Cellular Glass Cellular Glass Urethane Polyisocyanurate	40 40 20 25	50 40 20 25	50 40 20 25	65 40 25 25	80 40 25 25
Hot domestic water supply and recirculating piping (maximum 93 °C)	Cellular Glass Urethane Polyisocyanurate	40 20 25	40 20 25	40 25 25	40 25 25	40 25 25
Cold domestic water piping above and below ceiling	Cellular Glass Flexible Cellular Urethane Polyisocyanurate	40 15 20 25	40 15 20 25	40 15 20 25	40 N/A 25 25	40 N/A 25 25
Heating hot water (supply and return, maximum 121 °C)	Calcium Silicate Cellular Glass	50 40	50 40	65 40	65 40	65 40
Refrigerant suction piping (177 °C)	Flexible Cellular Cellular Glass	15 40	N/A 40	N/A 40	N/A 40	N/A 40
Compressed air discharge, steam and condensate return (94 to 121 °C)	Mineral Fiber Calcium Silicate Cellular Glass	40 50 40	50 80 40	65 100 40	80 100 40	90 115 40

Service	Material	Tube and Pipe Size (mm)				
		6-32	40-80	90-125	150-250	280-400
Exposed lavatory drains, exposed domestic water piping and drains to areas for handicapped personnel	Flexible Cellular	15	15	15	16	16
Horizontal roof drain leaders (including underside of roof drain fitting)	Mineral Fiber	25	25	40	40	50
A/C condensate drain located inside building	Mineral Fiber Cellular Glass Flexible Cellular	20 40 15	25 40 15	25 40 15	25 40 N/A	25 40 N/A
Medium-temperature hot water and steam (122 to 177 °C)	Calcium Silicate Cellular Glass	65 40	90 40	115 40	115 50	125 65
High-temperature (177 to 204 °C) and steam (177 to 260 °C)	Calcium Silicate Cellular Glass Composite	65 25 50	80 25 50	100 25 50	100 25 50	100 25 50
Brine systems cryogenics (34 to 0 °C)	Cellular Glass Polyisocyanurate	65 35	65 35	80 45	80 45	90 45
Brine systems cryogenics (0 to 171 °C)	Cellular Glass Polyisocyanurate	50 30	50 30	50 30	65 35	80 45

F.7.3 Duct Insulation:

Table F.7.3.a Minimum Duct Insulation Thermal Resistance Factors

DELTA to °C	27	54	81	108	136	162
R-Value	1.8	3.6	5.4	7.2	9.1	11.1

Note: Duct systems, or portions thereof, shall be insulated to provide a thermal resistance, excluding film resistances, of

R = DELTA t ($m^2 \cdot h \cdot °C/J$) = 15

Where DELTA t = design temperature differential between air in the duct and the duct surface in degrees centigrade. Noninsulated ducts in noninsulated sections of exterior walls and in attics above the insulation might not meet requirements of ASHRAE Standard 90A. Required thermal

resistances do not consider condensation. Additional insulation with vapor barriers may be required to prevent condensation under some conditions. For residential buildings with uninsulated roofs over attics containing ducts, air temperatures shown in Table F.7.3.b should be used. Excerpted by permission from ASHRAE Standard 90A, published by American Society of Heating, Refrigerating and Air-Conditioning Engineers, Atlanta, Georgia.

Table F.7.3.b Residential Attic Temperature

Roof Pitch: Summer Conditions	°C
5 in 12 and up	54
3 in 12 to 5 in 12	60
Less than 3 in 12	66
Roof pitch: winter conditions	
All roof pitches	12° greater than outdoor design temperature

Reference: Excerpted by permission from ASHRAE Standard 90A, published by American Society of Heating, Refrigerating and Air-Conditioning Engineers, Atlanta, Georgia.

F.7.4 Insulation Materials for Equipment:

Table F.7.4.a Insulation Materials for Equipment

Equipment	Spec.	Type	Class
Flexible mineral fiber Surface temperatures up to 204 °C	ASTM C553	1	B-3
Rigid mineral fiber Surface temperatures up to 204 °C Surface temperatures up to 454 °C	ASTM C612		1 or 2 3
Cellular glass surface temperatures between -240 and +427 °C	ASTM C552	1, 2, or 3	1 or 2

Table F.7.4.b Insulation Thickness for Equipment

Equipment	Recommended Thickness (mm)
Expansion tanks or pneumatic water tanks	25
Air separators	50
Pumps	50
Hot water storage tanks	50
Heat exchangers, such as steam-to-hot-water convertors Up to 121 °C 121 to 204 °C 205 to 316 °C	 50 90 150
Hot water duct-mounted coils	50
Chilled water tanks* 177 to 13 °C	 25
Cryogenic Equipment* -34 to -17 °C	 100

*Vapor barrier is required.

F.7.5 Insulation for Boiler Stack and Diesel Engine Exhaust Pipe:

Table F.7.5 Insulation and Thickness for Boiler Stack and Diesel Engine Exhaust Pipe

Service and Surface Temperature Range (°C)	Materials	Outside Diameter (mm)				
		6-32	40-80	90-125	150-250	280-900
Boiler stack (up to 204)	Mineral Fiber ASTM C553, Class B-3, ASTM C547, Class 1, or ASTM C612, Class 1	N/A	N/A	80	90	100
	Calcium Silicate ASTM C533, Type 1	N/A	N/A	80	90	100
	Cellular Glass ASTM C552, Type II	40	40	40	50	65

Service and Surface Temperature Range (°C)	Materials	Outside Diameter (mm)				
		6-32	40-80	90-125	150-250	280-900
Boiler stack (205 to 316)	Mineral Fiber ASTM C547, Class 2, ASTM C592, Class 1 or ASTM C612, Class 3	N/A	N/A	100	100	125
	Calcium Silicate ASTM C533, Type 1	N/A	N/A	100	100	100
	Mineral Fiber/Cellular Glass Composite:					
	Mineral Fiber ASTM C547, Class 2 ASTM C592, Class 1 or ASTM C612, Class 3	25	25	25	25	50
	Cellular Glass ASTM C552, Type II	50	50	50	50	50
Boiler stack (316 to 427)	Mineral Fiber ASTM C547, Class 3 ASTM C592, Class 1 or ASTM C612 Class 3	N/A	N/A	100	100	150
	Calcium Silicate ASTM C533, Type 1	N/A	N/A	100	100	150
	Mineral Fiber/ Cellular Glass Composite:					
	Mineral Fiber ASTM C547, Class 2 ASTM C592, Class 1 or ASTM C612, Class 3	50	50	50	80	100
	Cellular Glass ASTM C552, Type II	50	50	50	80	50
Diesel engine exhaust (up to 371)	Calcium Silicate ASTM C533, Type I	80	90	100	100	100

Service and Surface Temperature Range (°C)	Materials	Outside Diameter (mm)				
		6-32	40-80	90-125	150-250	280-900
	Cellular Glass ASTM C592, Type II	65	90	100	115	150

F.8 Testing and Balancing

The A/E for NIH buildings should specify a complete and comprehensive system operation as part of a commissioning guide/plan developed for each project as needed that includes testing, adjusting, and balancing of environmental and other systems to produce the design objectives. Air conditioning as defined by ASHRAE is the process of treating air to control simultaneously its temperature, humidity, cleanliness, and distribution to meet the comfort requirements of the conditioned space. The balance process serves as the quality control function to ensure that the air-conditioning systems are performing to the specified design intent.

Each air treatment process in the conditioning system contributes a specific function to produce proper environmental conditions. However, it is the coordinated action of all these processes in a system that produces the desired effect. If any one of these coordinated functions does not perform to expectations, the final results will affect the overall system performance. The balancing process must confirm that the entire system produces the results for which it was designed.

The testing and balancing (TAB) process shall be specified to meet one or both of the following standards (latest edition):

- *National Standards for Total System Balance* as defined by the Associated Air Balance Council (AABC) and/or
- *Procedural Standards for Testing, Adjusting and Balancing of Environmental Systems* as published by the National Environmental Balancing Bureau (NEBB)

All work must be performed by an independent TAB contractor who is an approved member of either the AABC or NEBB.

The TAB process should be specified to meet the *National Standards for Total System Balance* as defined by the AABC's latest edition or NEBB. All work provided must be performed by an independent TAB contractor who is an approved member

of the AABC or NEBB. The TAB contractor should provide all required pre-construction plan checks and reviews; should test, adjust, and balance the air and water system; and should submit completed reports, floor plans indicating TAB points, analysis, and verification data showing proper system performance that meets the intent of design.

TAB is a science that requires understanding of design intent, proper use of instruments, evaluation of readings, and adjustment of the system to design conditions. The mere ability to use an instrument does not qualify a person as a TAB engineer or technician. Qualification requires training and years of field experience in applying proven techniques and analyzing gathered data. Project specifications should require that only trained engineers and technicians be allowed to test and balance systems in NIH buildings.

NIH building projects often are constructed and occupied in multiple phases. The TAB process specified should address the requirements of interim balancing to support partial occupancy of buildings. The health and safety of occupants and the environmental conditions must be suitable for continuous operation at all phases during construction.

Mechanical systems may require complete or zone balancing at the end of each phase. Once fully occupied, entire systems may require reverification to ensure that later phases have not created deficiencies in early ones. Multiple drive assemblies may be required for fans. Followup TAB work may also be required during premium time to avoid disruption in research functions.

The completion of TAB services seldom occurs smoothly because of construction problems and occupancy functions, equipment malfunction, or institute-supplied equipment not in the scope of work. The A/E, Project Officer, Division of Safety, commissioning agent, and research staff should develop an occupancy/move plan and operation strategy that can be specified in the contract documents and force the TAB process to accommodate its intended requirements. The project engineer's task will be to define a generalized TAB procedure that fully supports the phasing and clearly ties down the full scope of work at bid time. All costs associated with TAB services through the completion of building occupancy should be included at bid time.

F.9 Program Equipment

The selection and use of program equipment such as refrigerators, freezers, centrifuges, autoclaves, glassware washers, biological safety cabinets, fume hoods, and so on should be established early in the design phase so that mechanical and electrical systems can be designed to support specific equipment requirements. All equipment selected for use in NIH facilities should meet NFPA, OSHA, NSF, and NIH Fume Hoods Specifications requirements. Equipment selected should not contain asbestos, lead, and mercury. The A/E shall carefully ascertain equipment requirements so that heat rejection, electrical usage, and other utility consumption data are defined for system design. Spatial requirements for equipment must be closely reviewed, and layouts should allow for access to all piping, wiring, and ductwork connections and easy cleaning and replacement of parts. Mechanical systems should be designed and detailed so that they do not induce harm to or impede the operating efficiency of program equipment. Pressure regulators, safety relief valves, gravity drainage facilities, temperature controls, and backflow protection devices should be provided as required to protect equipment.

Program equipment as defined by the program of requirements should be connected to an independent energy management and control system to monitor integral equipment alarms. The complete control and operation/maintenance strategy for program equipment should be closely reviewed against program requirements and with building occupants. The maintenance of such equipment often dictates the magnitude of control points and monitoring facilities.

F.10 Motors and Drives

Motors and drive assemblies should be selected to optimize the efficiency of mechanical and building systems. Motors must always be of adequate size to drive the equipment without exceeding the nameplate rating at the speed specified or at the load that may be obtained by the drive.

Motors shall be rated for continuous duty at 115 percent of rated capacity and base temperature rise on an ambient temperature of 40 °C. Motors 560 W and larger shall be three-phase, Class B, general-purpose, squirrel cage, open-type, high-efficiency induction motors in accordance with National Electrical Manufacturers Association (NEMA) Design B standards, wound for voltage specific to the project, 60 Hz AC, unless otherwise required by the design. Motors smaller than 560 W shall be single-

phase, open-capacitor type in accordance with NEMA standards for 115 V, 60 Hz, AC. Motors 124 W and smaller may be the split-phase type.

All motors utilized on NIH projects shall have the minimum efficiency as scheduled below. Nameplate rating and efficiency shall be per Institute of Electrical and Electronics Engineers (IEEE), Test Procedure 112, Method B:

Table F.10 Minimum Motor Efficiency

Motor Size	0.75	1.1 1.5	2.2 3.7	5.6 7.5	11.2 14.9	18.7 22.4	29.8 37.3	44.8	56.0	74.6 93.3	112.0 - 149.2
Min. kW	82.5	84.0	87.5	89.5	91.0	92.4	93.0	93.6	94.1	94.5	95.0

All motors 0.75 kW and larger should have a composite power factor rating of 90 to 100 percent when the driven equipment is operating at the design duty. Devices such as capacitors, or equipment such as solid-state power factor controllers, should be provided as part of the motor or motor-driven equipment when required for power factor correction.

Variable speed drives (VSD) of various types should be employed on NIH projects to vary the flow of water and air. The A/E should evaluate the specific application of each speed drive and provide life-cycle costing to prove its economic viability. Other variable-flow devices such as inlet vanes may be considered for smaller systems.

The A/E should consider the following issues when employing VSDs for NIH buildings:

- When main and standby equipment is to be controlled by speed drives, only one drive shall be provided to serve both pieces of equipment. Consider providing VSD as part of motor control center (MCC).
- Equipment motors should be matched to the drive so that low speeds can be realized.
- Speed drives shall have a manual bypass completely independent of the drive cabinet. Motors shall operate at full speed in the bypass position when the speed drive is deenergized and open for service.
- When deemed necessary because of the critical nature of equipment served, multiple drives may be provided for redundant equipment.

- The level of reliability required of the VSD system should be identified.
- The operational overloads and starting conditions required by the application shall be defined. Typical requirements may be: variable torque = 115 percent for 1 minute; constant torque = 150 percent for 1 minute.
- The way control commands for the VSDs will be generated by the process should be determined, i.e., manual/potentiometer analog current loop, 4-20 mA serial communication (RS232, RS485, etc.) Isolated or nonisolated process feedback (pressure, temperature, flow, etc.)
- The characteristic surges, sags, or momentary discontinuities present in the supply and any other nonlinear loads on the feeder should be defined.
- The levels of voltage distortion on the power system should be determined before the VSD is applied. Before-and-after distortion effects on the supply system should be evaluated and defined about the harmonic current spectrum injected into the system and its effect on the other loads.
- The levels of voltage on the power system before the VSD is applied; the harmonic current spectrum to be injected into the supply system by the VSD, the magnitude of distortion on the supply voltage before and after, and whether this harmonic current injection will affect other loads shall be defined.
- What speed range is required and whether the load will be operated beyond base speed range should be defined.
- It shall be determined whether all parts of the rotating load are suitable for the range of vibration excitation frequencies.
- The waveform the VSD produces and whether there are any constraints on the motor connections' length should be determined.
- It shall be verified that the motor is sized to provide the necessary load torque while operating at reduced speed. The power capability of the motor may be restricted at low speeds. The motor output capability should be compared with the load requirement. An additional cooling fan may be required for constant torque loads. (This pertains to constant torque systems, such as compressors, etc.)
- The heat rejection from the VSD controller and how the losses are removed from the equipment should be defined. The heat generated with the VSD is normally removed by air or water cooling.
- The range of voltage and frequency of the electric supply that will permit full rated output of the VSD should be defined. What happens outside the range, what line transients can be tolerated, and what the VSD input power factor is should be considered.

- How the VSD operates under fault conditions should be defined, for example, a mechanical overload, an electrical short circuit in the motor circuit, or a ground fault in the load system.
- The motor protection provided by the VSD equipment and any additional protection required for comprehensive system protection, e.g., overload, overspend, reverse rotation, should be defined.
- The manufacturer should be required to submit information for system operations and maintenance and to sell diagnostic, warranty, training, and operation and maintenance manuals.
- The total power factor (PF) (i.e., real PF and apparent PF) should be defined. The difference between the two is caused by inductance (reactive element) in transformers, motors, etc.

F.10.1 Harmonic Voltage and Currents: VSDs typically inject harmonic currents into the power system as a result of the nonlinear nature of switching in electronic power devices. The harmonic currents combine with the system impedance frequency response characteristic and create harmonic voltage distortion. VSDs shall be a minimum of 18 pulse. The harmonic voltages and currents can cause spurious operation of Potomac Electric Power Company (PEPCO) and NIH relays and controls, capacitor failures, motor and transformer overheating, and increased power system losses. These problems are usually compounded by the application of power-factor correction capacitors (especially on the NIH's low-voltage system), which can create resonance conditions that magnify the harmonic distortion levels. Several concerns associated with harmonic distortion levels need to be addressed in the project specification. This will avoid significant harmonic-related problems with both the VSD equipment and the NIH operations controlled. These concerns include the following:

- Harmonic distortion on both the supply and motor side of the drive
- Equipment de-rating due to harmonic distortion produced by VSDs
- Audible noise caused by high-frequency (several kHz) components in the current and voltage
- Harmonic filter design and specifications

A three-phase VSD system consists of three components (rectifier, direct-current [DC] link, and inverter) and a control system. The rectifier converts the three-phase 60 Hz AC input to a DC signal. Depending on the system, an inductor, a capacitor, or a combination of these components smooths the DC signal (reduces the voltage

ripple) in the direct current link. The inverter circuit converts the DC signal into a variable-frequency AC voltage to control the speed of the induction motor. Since for this application a voltage-source inverter (VSI) drive is considered, the concern regarding this particular device is outlined below. These drives (the most common types, up to 225 kW) use a large capacitor in the DC link to provide relatively consistent DC voltage to the inverter. The inverter then chops this DC voltage to provide a variable-frequency AC voltage for the motor. VSI drives can be purchased off -the shelf and employ PWM techniques to improve the quality of the output voltage waveform. However, there is a concern regarding nuisance tripping due to capacitor-switching transients. Small VSDs have a VSI rectifier (AC to DC) and use a PWM inverter (DC to AC) to supply the motor. This design requires a DC capacitor to smooth the DC link voltage. The controls for this type of drive have protection for DC overvoltages and undervoltages with narrow thresholds. It is not uncommon for the DC overvoltage control to cause tripping of the drive whenever the DC voltage exceeds 1.17 V per unit (for the particular application, 760 V for a 480 V application). Since the DC capacitor is connected alternately across each of the three phases, drives of this type can be extremely sensitive to overvoltages on the AC power side. One event of particular concern is capacitor switching on the PEPCO system. PEPCO voltage-switching transients result in a surge of current into the DC link capacitor at a relatively low frequency (300-800 Hz). This current surge charges the DC link capacitor, causing an overvoltage to occur (through Ohm's law). The overvoltage (not necessarily magnified) exceeds the voltage tolerance thresholds associated with the overvoltage protection, which most likely will trip the VSD out of service. This is called nuisance tripping because the situation can occur day after day, often at the same time. Several methods are available to ameliorate such tripping; some are simple, and some costly. Use of harmonic filters to reduce overvoltages, an expensive alternative, is effective in protecting drives from component failure but may not completely eliminate nuisance tripping of small drives. The most effective (and inexpensive) way to eliminate nuisance tripping of small drives is to isolate them from the power system with series inductors (chokes). With a concomitant voltage drop across the inductor, the series inductance of the choke(s) reduce(s) the current surge into the VSD, thereby limiting the DC overvoltage. The most important issue regarding this method is that the designer should determine the precise inductor size for each particular VSD; this requires a detailed transient simulation that takes into account capacitor size, transformer size, and so on. The choke size must be selected carefully. If the choke has too much impedance, it can increase harmonic distortion levels and notching transients at the drive terminals. Chokes for this application are commercially available in sizes

from 1.5 to 5.0 percent of the VSD impedance at various kW ratings. A size of 3.0 percent is sufficient to avoid nuisance tripping due to capacitor-switching operations. Standard isolation transformers serve the same purpose.

F.10.2 Voltage Sag Concerns: Despite the main advantages provided by VSDs, the concern for nuisance tripping during voltage sag conditions remains. This power quality concern involves the control sensitivity to short-duration voltage sags and momentary interruptions. Actually, many different kinds of controls, and even motor contractors, are sensitive to these voltage sags. Voltage sags caused by faults on the power system represent one of the most important problems that can be experienced by the NIH with sensitive loads. Whenever there is a fault on the transmission or distribution system serving the NIH facility (faults cannot be completely avoided regardless of the system design), there will be either a voltage sag or an interruption. If the fault occurs on a parallel-distribution feeder circuit or on the transmission system, there will be a voltage sag that lasts until the fault is cleared by some protective device (typically 3-30 cycles depending on the fault location). A method of predicting the likelihood of faults in a certain region along with knowledge of equipment sensitivity can be used to determine an "area of vulnerability." A combination of computer short-circuit simulations and lightning performance analysis should be used to determine the affected area. The VSD controls should be designed to handle these voltage sag conditions without tripping. The specifications contain no-ride-through capability. This is an important consideration when VSDs are applied in critical processes such as that of the NIH, where nuisance tripping can cause significant problems. The designer should evaluate the level of sensitivity of the controls to voltage sags. If such concern exists, applying power conditioning to the controls themselves will be considered. Feroresonant transformers can handle voltage sags down to approximately 60 percent of the nominal voltage. This is sufficient to handle virtually all voltage sags caused by single line-to-ground faults on the power system. If additional protection is needed, the controls can be protected with an uninterruptible power supply (UPS) system, which can handle complete interruptions in the input signal.

F.10.3 Transient Overvoltage Concerns: Transient overvoltage occurs in connection with capacitor switching. Each time a capacitor is energized, a transient voltage oscillation occurs between the capacitor and power system inductance. The result is a transient overvoltage that can be as high as 2.0 V per unit (of the normal voltage) at the capacitor location. The magnitude is usually less than 2.0 V per unit as a result of dampening provided by system loads and losses. The transient

overvoltage caused by capacitor energizing is generally not a concern to PEPCO because its magnitude is usually below the level at which surge-protective devices operate (1.5 to 2.0 V per unit). However, these transients can be magnified at the NIH facility if the NIH has low-voltage capacitor banks for (displacement) power factor correction. The designer should check for this matter. When the frequency of a transient overvoltage matches the series-resonant frequency of the NIH's transformer coupled with PEPCO capacitor(s) at the East Substation, a low-impedance, high-current (at the resonant frequency) condition results. As this large current passes through the NIH's transformer, it induces a large voltage "drop" that passes through zero voltage to create a large voltage of opposite sign (because of a phase-angle change) at the resonant frequency. The VSD and the NIH's paralleled capacitor (and their surge protection devices) then see this magnified voltage (compared to distribution feeder voltage). When the resonant-frequency current completes its path to ground through the capacitor, the voltage experiences a "boost" to the ground-reference voltage. The magnification of capacitor-switching transients is most severe when the following condition exists: The capacitor switch on the higher voltage system is much larger (kVAR) than the capacitor at the low-voltage bus. Generally, this situation occurs most frequently for substation switching. The frequency of oscillation that occurs when the high-voltage capacitor is energized is close to the resonant frequency formed by the stepdown transformer in series with the low-voltage capacitor. There is little resistive load on the low-voltage system to provide dampening of the transient, as is usually the case for industrial plants (motors do not provide significant damping of these transients). It is not uncommon for magnified transients at low-voltage capacitors to range from 3.0 to 4.0 V per unit. These transients have significant energy associated with them and are likely to cause failure of protective devices, metal oxide varistors (MOVs), electronic components (silicon-controlled rectifiers, etc.), and capacitors. VSDs are particularly susceptible to these transients because of the relatively low peak-inverse voltage ratings of the semiconductor switches and the low-energy ratings of the MOVs used to protect the VSD power electronics. The following should be evaluated and identified in the specifications to control these magnified transient overvoltages: using vacuum switches with synchronous closing controls to energize the capacitor bank and control the capacitor-switching transient; providing high-energy MOV protection on the 480 V buses (the energy capability of these arresters should be at least 1 kJ); or using tuned filters for power factor correction instead of just shunt capacitor banks (the tuned filters change the frequency response of the circuit and usually prevent magnification problems; this solution combines power factor correction, harmonic control, and transient control).

F.10.4 Electromagnetic Interference and Radio Frequency Interference Concerns:

IEEE Standard 519, *Recommended Practices and Requirements for Harmonic Control in Electric Power Systems,* recommends limits for voltage distortion and harmonic current resulting from nonlinear loads. However, the IEEE standard is not intended to cover the effects of radio frequency interference (RFI). As a result, specifications will occasionally refer to Federal Communications Commission (FCC) *Rules and Regulations*, Volume 2, Part 15, Subpart J, Class A (referred to as "FCC rule") to establish limits on electromagnetic emission for VSDs. The FCC rule was printed in October 1982 primarily for computing devices. Computers generate RF energy and possibly cause interference with nearby equipment if misapplied. Generally, the rule sets conducted and radiation RF limits for electronic devices using timing signals or digital techniques with pulse rates in excess of 10 000 pulses per second. Technically speaking, VSDs with high-frequency timing circuits conform to this description, although they are not intended as a computing device described in the FCC rule. The primary and more significant source of electromagnetic interference (EMI) from a VSD stems from the power circuits, and, in this respect, drives become an incidental radiation device. The only requirement for incidental radiation devices in the FCC rule is that they shall be operated so that the RF energy emitted does not cause harmful interference. If so, the operator must eliminate the interference. All VSDs, regardless of the manufacturer, will produce electromagnetic emission to some degree. Primarily, these emissions are due to the steep wave fronts and very rapid switching of power semiconductors in the VSD. Typically this occurs when transistors, GTOs, or other "fast devices" are gated on and off in DC chopper circuits and inverter power circuits for PWM, current source, and six-step drives. Typically, conductors to the VSDs and motor act as an antenna and radiate the RF energy into the media. Therefore, it is possible for RF to be induced into nearby antennas and other conductors and be carried to the loads in that circuit. Holding a portable AM radio near a power outlet in close proximity to an EMI source can be evidence of this situation. Distributive digital control (DDC) systems, medical alarms system and equipment, telecommunication services, and other electronic equipment utilizing very high frequencies may experience noisy interference or malfunctions when subject to EM/RF energy. The specification should clearly outline the corrective measures required. The first and foremost corrective measure to avoid problems associated with EMI is proper routing of the drive conductors in separate metallic conduits (even separate raceways if practical) as remote as possible from any other conductors or suspect equipment. Usually, this will be sufficient to avoid

EMI problems. EM/RF filters can be engineered for a system to trap or inhibit high-frequency emissions into power system conductors. However, because of the nature of EMI, the effectiveness of any filter is highly sensitive to where it is installed. Further, it is not certain that the filter will correct the problem even though it may meet FCC limits. Most manufacturers will include this footnote with their literature: "Filters are expensive and usually require additional space. It is recommended that they be furnished only when they are specifically required to avoid or solve a problem after exhausting all proper installation methods. In addition, filters are an additional component and must be considered in the overall reliability of a power system." To contain RF radiation through the media from the VSD, complete shielding using a metallic enclosure generally is required. This will usually contain most of the radiated RF to a reasonable distance.

F.11 HVAC Systems

The HVAC systems at NIH buildings are highly diverse and must satisfy a large variety of program requirements. The challenge to the HVAC designer is to accurately define system-operating parameters and to control strategies, heat load data, utility requirements, and program equipment needs. The design engineer and the maintenance engineer must take a proactive role in the early design stages so that operating requirements are defined clearly and concisely. HVAC systems must fully support the program of requirements, utilize state-of-the-art, efficient and proven technology, and promote the health and safety of building occupants. Proposed system alternatives must be evaluated fairly, with consideration given to operating and maintenance cost, reliability, flexibility, redundancy, future expansion capacity, and the value of lost research in the event of system failures. The health and safety of building occupants drive the need for good indoor air quality, and all system alternatives must fully comply with the requirements of these guidelines.

F.11.1 All-Air Systems: In air systems, the air supplied to the spaces provides the cooling and heating capacity necessary to produce the desired temperature, filtration, ventilation, and humidity levels for comfort or process control. The fan energy required for the distribution of the air can be quite significant and is dependent upon the quantity of the air, pressure drops in the conditioning equipment and ductwork, fan and drive efficiencies, and hours of operation. Although ventilation for reduction of contaminants may govern frequently in labs, animal spaces, and special spaces, the quantity of air is usually determined by and is proportional to the space-sensible cooling or heating load and inversely proportional to the difference

between room and supply air temperatures. Consequently, reduction in the space-cooling load through prudent design of the building envelope and lighting will produce a reduction in air volume and hence a reduction of the required energy consumption. Fan energy consumption should be optimized through the design of the conditioning equipment, selection of components, and duct design.

Air-handling equipment including intake and exhaust louvers, filters, and heating and cooling coils can be optimized by selection at a conservative face velocity. Lower face velocities can be justified by life-cycle cost analysis. Filter life may be improved by reducing face velocity, permitting an economically justifiable lower final pressure drop (before replacement).

Simpler, shorter duct systems designed with conservatively low duct velocities are consistent with energy efficiency objectives and offer acoustical benefits. High-loss fittings, such as mitered elbows, abrupt transitions, takeoffs, and internal obstructions should be avoided. Long duct runs, if necessary, should be designed with special consideration of pressure loss since the maximum loss for any run should be imposed upon the entire fan system. Duct systems should be designed at the lowest pressure possible given the physical restrictions within buildings.

Air systems should serve spaces having similar operating characteristics. Spaces with different periods of occupancy or substantially different ventilation requirements should not be combined on the same system. Dedicating air systems to specific departments provides proper grouping of spaces with similar occupancy characteristics and environmental performance requirements and simplifies the duct distribution systems.

The use of cold air distribution may be considered for an energy conservation method. However, the A/E must address several factors to ensure that the system successfully distributes the cold air. Cold air distribution systems supply air for space comfort conditioning at nominal temperatures between 3 and 11 °C, as opposed to conventional supply temperatures of 13 and 15 °C. This approach has been applied primarily to take full advantage of the 1 to 3 °C chilled water available with ice storage.

The A/E should assess the full economic impact of the system, such as first-cost reductions that come from the decreased size of air handlers, fans, ducts, chilled water pumps, and piping. In new buildings, there will be structural cost savings due

to the decreased floor-to-floor height requirements of smaller ducts. First costs may increase for cooling coils, terminal units, duct insulation, and the cooling storage system, but the net effect may be a reduction in total system costs. Typically, air and water distribution cost reduction of 15 to 20 percent, depending on the size of the system, can be achieved by lowering the supply air temperature from 13 to 7 °C. The net total cost reduction, including refrigeration and storage equipment costs, are typically 6 to 11 percent when comparing a conventional chiller system with 13 °C supply air and an ice storage system with 7 °C supply air.

Systems using nominal 7 °C supply air (range of 6 to 8 °C) should be emphasized because they offer the greater benefits for application with ice storage. The nominal 3 °C supply air (lower than 5 °C) should not be recommended because of the requirement of more specialized equipment and design effort, with little additional savings.

Very often overlooked parameters in the economic impact are:

- The cooling energy, which increases with cold air distribution because more dehumidification is performed than is required for room comfort.
- The penalty for the reduced availability of economizer cooling.

The A/E should consider that at the typical relative humidity (RH) levels of 35 to 45 percent, dry-bulb temperature can be increased -17 to -16 °C above conventional room comfort set points, and occupants will perceive the same comfort conditions. This effect can result in a 5 to 10 percent reduction in cooling energy and in most cases is critical to achieving a net energy reduction with cold air distribution. The optimum supply air temperature should be determined by an economic analysis that considers changes in first costs and operating costs for various design options.

A blow-through configuration, with the cooling coil downstream of the supply fan, should be utilized for the cold air distribution systems. This allows the fan heat to be absorbed directly in the coil, resulting in a supply air temperature -17 to -16 °C lower than for a draw-through configuration. Coils with 8 to 12 rows should be used to provide supply air at 6 to 8 °C. Fin spacing should not exceed 12 fins per square meter, and the fin configuration should allow easy cleaning.

A high chilled-water temperature rise in the coil is recommended to reduce pumping horsepower and to increase the efficiency of refrigeration equipment operating in

chiller mode. In general, a -7 °C rise can easily be achieved with storage systems. A 4 °C rise is recommended for cold air distribution systems, and in some cases a rise as high as -1 °C.

The coil face velocity should not be more than 1.778 m/s-2.286 m/s (350-450 fpm), with a maximum limit of 2.286m/s (450 fpm). A low face velocity requires a large coil and air-handling unit but achieves better coil heat transfer and a lower supply air temperature. A higher face velocity results in smaller equipment but is limited by carryover of moisture from the coil into downstream ductwork. The coil face velocity for heating only units may approach 2.54 m/s (500 fpm).

The A/E should be aware of oversizing of coils with ice storage systems that can lead to problems and should approach with care. Excessive dehumidification and poor control of chilled water flow can result, along with overcooling of the space, if the air side is also oversized.

Round ducts should be used for the cold air distribution. If round ducts cannot be used, the aspect ratio (ratio of width to height) of rectangular ducts should be minimized to reduce pressure losses and initial costs.

The minimum insulation thickness for a cold air distribution system will be determined by requirements for preventing condensation. The optimum thickness, which will likely be greater than this minimum, is determined by an economic analysis of the cost of additional insulation versus the penalties from duct heat gained and increased supply-air temperature. These penalties include the increased size of equipment and additional energy consumption.

A direct cold air supply requires the use of diffusers that will perform satisfactorily with the expected supply air temperatures, especially at low loads. The design must be such that colder, low-velocity air will not dump directly into the space. Before designing such a system, the diffuser manufacturer must be consulted and tests run to ensure that the diffuser will perform adequately with the expected supply air temperature. Long supply-air duct runs can have a temperature rise of -15 to -13 °C at low airflow. In such cases, the duct temperature rise at low loads may prevent dumping for systems with supply air as low as 6 °C at the cooling coil.

F.11.2 Air and Water Systems: Air and water systems should be composed of a central ventilation system and four pipe-fan coil units. The system should utilize both chilled water and hot water piping to each terminal fan coil unit.

Controls for room fan coil units should be sequenced to avoid simultaneous heating and cooling with provisions for an adjustable dead band between cooling and heating modes, unless relative humidity control is essential, in which case simultaneous cooling and heating may be considered.

Fan coil units may be utilized to provide supplemental cooling for equipment areas or other spaces with large internal heat gains and limited ventilation requirements. The central air systems should be utilized in conjunction with the fan coil units to maintain minimum ventilation rates. Induction-type terminal units should not be utilized. Secondary pumps designed for the heating or cooling piping loops should be automatically controlled to shut off when their function is unnecessary.

Shutoff gate valves should be used in all heating, glycol, water, industrial hydronic systems, steam, and condensate lines (recommended use of OS&Y 300# ANSI for high pressure and 150# ANSI for medium and low-pressure system). Bronze stemmed gate valves manufactured by Grinnel, Vale and Jenkins are recommended for use at the NIH campus. All valve stems on systems to be insulated shall be provided as extended type as required to permit sufficient clearance for proper operation without damaging insulation.

High-performance butterfly valves may be used for chilled water, domestic, or industrial cold water services. Gate valves are preferred, and the use of butterfly valves for different applications should be evaluated by the project engineer in consultation with the Resource Management Section of the Public Works Branch. Full ported top entry or three piece bronze, stainless steel ball valves may be used on all water and gas services for sizes 50 mm or less.

F.11.3 Unitary Equipment: The use of unitary equipment should be restricted to serve unique areas, such as computer rooms and support facilities, or as required to maintain specific environmental conditions.

F.11.4 Sound Lining: Duct lining is not permitted for use in duct systems. Omission of duct lining usually requires sound attenuators in order to meet the specified NC criteria. A sound analysis should be performed to ascertain the need of terminal

sound attenuators. Sound attenuators should be selected for low velocities and low pressure losses. High-velocity selection should be avoided because of the pressure loss and internally generated noise. Sound attenuators shall have approved lining material to prevent insulation fibers from becoming airborne.

F.11.5 Plenums: The use of plenums or air shafts for air distribution (supply, return, or exhaust) is prohibited in NIH buildings. Common outside ducts may be permitted for multiple air intakes to air-handling units because of the constraints on space and building configuration. Corridors, exit passageways, stairways, and other similar spaces should not be used as plenums or transfer air paths as defined by NFPA and the *International Building Code*.

F.11.6 Indoor Air Quality: Providing acceptable indoor air quality (IAQ) in NIH buildings is the responsibility of the A/E. These guidelines define acceptable IAQ levels and recommend methodologies to achieve those levels. Typical contaminant control measures include dilution and effective ventilation, local exhaust ventilation, air cleaning, temperature, and humidity control.

The use of mechanical ventilation to maintain relatively comfortable and odor-free indoor spaces is based on the principles of general dilution theory. By doubling the volume of air available for dilution under static or constant conditions of contaminant generation, a 50 percent reduction in contaminant concentration can be expected. If the air volume is doubled again, the concentration will be reduced to 25 percent of its original value, and so on. The converse is also true. By reducing the air volume available for dilution, contaminant concentrations would be expected to correspondingly increase.

However, dilution ventilation is not as effective in many cases. In those instances where contaminants such as formaldehyde and volatile organic compounds (VOCs) are released from sources by diffusion, emission will vary in response to changes in environmental conditions such as temperature, relative humidity, and ventilation rates themselves. Increased ventilation rates, for example, produce vapor pressure exchanges around sources, which cause emission rates to increase. This phenomenon has been reported for formaldehyde and a number of VOCs. With VOCs, a sixfold increase in the ventilation rate will result in a twofold increase in source strength.

The shortcomings of dilution ventilation should be fully addressed by the A/E.

The relationship between CO_2 generation rates, occupant density, and outdoor ventilation rates has been well established and serves as the basis for the ASHRAE Standards and WHO guidelines for acceptable IAQ. Because bioeffluent levels determined from CO_2 measurements have a relatively constant generation rate for a given occupant density, increased actual outdoor ventilation rates have a predictable effect on bioeffluent levels in buildings. Effects of high and low outdoor ventilation rates as well as occupant density on CO_2 should be evaluated.

F.11.7 Air-Handling Systems for Laboratory Buildings: Laboratory buildings should be designed with "once through," 100 percent outdoor air systems that automatically compensate for filter loading. Laboratory air shall not be recirculated. Systems should have pressure-independent hot water terminal reheat devices and individual laboratory module and/or office area temperature zone control. The HVAC system shall be designed to maintain the proper temperature, humidity, differential pressure, outdoor air exchange rate, and acoustic criteria within the space. Laboratory building air systems should operate continuously year-round. The HVAC system capacity should be based on the larger of the two main parameters specified below:

- The amount of fume hood exhaust required to meet actual design requirements or the minimum exhaust requirement set by chemical fume hood density policy at the NIH, whichever is greater. If the required exhaust to meet actual fume hood demand is less than the air exhaust required to meet minimum hood density requirements of one nominal 1.2 m-wide vertical fume hood (354 L/s) for every other laboratory module, then the fume hood exhaust demand shall be based on NIH Fume Hood Density Policy.
- The required space cooling loads. This is primarily a function of thermal transmission, solar loads, associated laboratory support equipment, and lighting loads. At the NIH, a combined laboratory equipment and lighting load density of 118 W/nm^2 shall be used as a minimum in design of laboratory areas (86 W/nm^2 for equipment, 32 W/nm^2 for lighting).

The ventilation rate should also be sufficient for the removal of contaminate. The following equation provides a single relationship that makes it possible to calculate the steady state, equilibrium concentration that would be produced in a room (or any

enclosed space for which the overall volume can be determined) by the **complete evaporation** of some specific volume of **any** identifiable volatile solvent.

$$C = \left[\frac{V_s \, p \, T}{[MW_s] \, P_{atm} \, V_{room}} \right] x \, (6.24 \times 10^7)$$

Where:

C = equilibrium concentration of volatile solvent that would be produced in the room by evaporation of the known volume of solvent, C measured in ppm.

V_s = volume of solvent that has evaporated, measured in mL.

p = density of solvent, measured in g/cm^3; T = temperature in room, measured in °K.

T = temperature in room, measured in °K.

MW_s = molecular weight of solvent.

P_{atm} = ambient barometric pressure prevailing in room, measured in mm Hg.

V_{room} = volume of room, measured in L.

6.24×10^7 = proportionality constant that makes this equation valid, under NTP conditions.

The following equation is known as the basic room purge equation. It provides the necessary relationship for determining the time required to reduce a known initial high-level concentration of any vapor—existing in a defined closed space or room—to a more acceptable ending lower level concentration.

$$D_t = \left[\frac{V}{Q} \right] \ln \left[\frac{C_{initial}}{C_{ending}} \right]$$

Where:

D_t = time required to reduce the vapor concentration in the closed space or room, as required, measured in minutes.

V = volume of closed space or room, measured in m^3.

Q = ventilation rate at which the closed space or room will be purged by whatever air-handling system is available for that purpose, measured in m^3/s.

$C_{initial}$ = initial high-level concentration of vapor in the ambient air of the closed space or room, which concentration is to be reduced—by purging at qm^3/m—to a more acceptable ending lower level concentration, measured in ppm.

C_{ending} = desired ending lower level concentration of the vapor that is to result from the purging effort in the closed space or room, also measured in ppm.

The application of the above equations can provide required L/s for dilution and assess fume hood stack concentrations that cannot be used to calculate the reentrainment of contaminated air into outdoor air intake which is referred to in the guidelines. The guidelines identify the use of ASHRAE methodology to locate intakes and stack outlets. However, ASHRAE does not have any guidelines on the required dilution rates. Therefore, the methodology identified by ASHRAE cannot be used without a set dilution requirement.

It is recommended that the reentry be assessed on the basis of the spill of a volatile compound. The spill area will be the fume hood pan (0.813 m^2 with Reynolds number of 30 000). From this information, the diffusivity in the air, mass transfer, and stack coefficient can be evaluated and then, by using ASHRAE methodology with a 1 000-rate dilution, the reentry concentrations can be calculated.

The use of the above equations can be used in situations such as the following: a 1.50 L glass bottle full of acetone (MW = 58.08; density = 0.891 g/cm^3; and vapor pressure = 226 mm Hg at 25 °C) is spilled from its position on a shelf, breaking when it hits the floor of a lab that has a volume of 47 m^3. If all the acetone evaporates, what will the ultimate ambient concentration of acetone be in the room? Is it reasonable to assume that all the acetone will evaporate? To solve the final part, both Dalton's law of partial pressures and Raoult's law will have to be applied to the

solution obtained in the first part. To solve the first part, the above equations are used:

$$C = \left| \frac{V_s \, p \, T}{[MW_s] \, P_{atm} \, V_{room}} \right| x \, (6.24 \times 10^7)$$

$$C = \left| \frac{(1.5)\,(1\,000)\,(0.79)\,(273.16 + 25)}{(58.08)\,(760)\,(1\,650)\,(28.32)} \right| x \, (6.24 \times 10^7) = 10\,702 \text{ ppm}$$

The ultimate ambient concentration level of the acetone vapors in this room will be 10 702 ppm. According to Raoult's law, the partial vapor pressure of any volatile component will be the product of the vapor pressure of the pure component and the mole fraction of that component in the solution being considered. In this case, dealing with pure acetone, the mole fraction will be 1.00 = 100 percent and Raoult's law shows that the "potential" for the partial vapor pressure of acetone would simply be its pure state vapor pressure, or 226 mm Hg. Applying Dalton's law of partial pressures to this fact:

$$C_{max} = \left| \frac{(1\,000\,000)\,(PVP_{acetone})}{P_{ambient}} \right|$$

$$C_{max} = \left| \frac{(1\,000\,000)\,(226)}{760} \right| = 297\,368$$

It is reasonable to assume that all the acetone will evaporate, since the concentration that would be produced by the quantity of acetone in the bottle that was broken during the fall is only a small fraction of the theoretical maximum acetone concentration that could exist in the ambient air (10 702 ppm vs. 297 368 ppm, with the former being only 3.6 percent of the latter). In fact, in a room for the size given, 41.7 L of pure acetone could reasonably be expected to evaporate completely. From this, one calculates the fume hood stack concentration and required L/s for purge. For example, if the goal is to ventilate the room until the acetone concentration is at or below the TLV-TWA concentration, which for acetone is 750 ppm, and if the room's ventilation system has a flow volume capacity of

236 L/s, it will take 8.7 minutes to reduce the acetone concentration to the required level, because:

$$D_t = \left| \frac{V}{Q} \right| \ln \left| \frac{C_{initial}}{C_{ending}} \right|$$

$$D_t = \left| \frac{1\,650}{500} \right| \ln \left| \frac{10\,702}{750} \right| = 8.772$$

The question frequently asked is what chemical to use in the ventilation and reentry calculations. The answer is chemicals with highest vapor pressure and highest ACGIH-STEL and order threshold limits. The few specific chemicals used for such calculation in industry are acetone, acetaldehyde, chlorobromomethane, and cyclohexane.

HVAC system design for equipment support areas, glass wash areas, sterilizer facilities, conference rooms, offices, and so on should be based on actual loads and conditions. The A/E should thoroughly review the Program of Requirements to understand the scope and magnitude of miscellaneous space.

Laboratory buildings shall be supplied with multiple, manifolded air-handling units (AHUs) such that upon failure of any major component related to an AHU, the remaining available HVAC air-handling equipment will provide 100 percent capacity. A parallel system design using two or more pieces of air-handling equipment that operate simultaneously to meet full load conditions is the preferred choice to ensure overall system air-handling reliability. Each AHU and its related components should be capable of being totally isolated with the help of isolation dampers located upstream and downstream from the remaining operational units to accommodate routine maintenance and emergency repairs in the event of equipment failure.

The laboratory exhaust systems, where there is no mixture incompatibility, should be arranged with multiple manifolded fans designed to maintain 100 percent of exhaust design conditions at all times. The number of fans should be determined by the A/E to accommodate physical and capacity restraints. One of the fans should be provided as a backup for any other single fan. Upon the loss of flow through any one fan, the designated backup fan shall be energized to maintain a constant exhaust

system flow. The fan designated as a backup should be automatically alternated among all system exhaust fans so that all motors and equipment experience approximately the same running time. Exhaust fan motors and drives must be located out of the airstream. Each fan should be fully isolated from the others to accommodate routine service while the overall system is operational.

Exhaust air from laboratory equipment such as fume hoods and biosafety cabinets directed to a general central laboratory exhaust main is preferably controlled through pressure-independent terminal units. Supply fans should be energized after exhaust fans are operational and exhaust flow is confirmed.

No positive pressurized segment of any laboratory exhaust system should be located in any occupied zones including mechanical rooms. Offices within the mechanical rooms are classified as occupied zones. The design should permit the installation of exhaust fans at the end of exhaust lines and as close as possible to the final point of discharge to avoid or minimize leakage to the space, particularly mechanical areas. The positive pressure segment of an exhaust system should be constructed per the SMACNA standard for 1 494 Pa water-gauge positive pressure. A leak test should be performed to verify the SMACNA allowable leakage rate as defined in the *HVAC Systems Duct Design Standard*, Third Edition, Chapter 5. All ductwork shall be SMACNA seal Class A.

All toilet and general-use exhaust should discharge through a separate exhaust system and will not tie into kitchen/coffee room exhaust. In buildings housing both laboratories and other types of space with distinct occupancy zones in which the lab areas are segregated from other types of space, a separate HVAC system for the laboratory area is mandated. **The HVAC designer is required to obtain approval from the NIH Division of Safety regarding exhaust mixture compatibility to avoid cross-contamination upon system failure or equipment damage due to an incompatible mixture.**

Exhaust from central sterilizers, cagewash equipment, and glass wash areas should have a separate exhaust system. Wet exhaust ductwork (aluminum or stainless steel) should be pitched for drainage back to the hood. Moisture eliminators should be considered for use at hoods.

As a minimum, supply air for these areas should pass through a prefilter and filter on the upstream side with efficiencies of 30 percent and 95 percent respectively, based

on ASHRAE Standard 52.1-92, atmospheric dust-spot test efficiency. Special areas may require greater filtration on both the supply and the exhaust sides. The requirements for additional exhaust filtration shall be coordinated with the NIH Division of Safety, Occupational Safety and Health Branch and Radiation Safety Branch, where specific hazardous program functions occur.

Ventilation of environmental rooms such as cold rooms should be addressed on design documents. Those rooms that serve as occupied functioning lab spaces should receive minimum outdoor air ventilation at the rates defined by ASHRAE Standard 62-1989. Environmental rooms used primarily for storage functions do not require ducted ventilation air.

Air systems will require humidification to meet space humidity requirements using central plant steam. Low-pressure, dry-steam, direct injection humidification to introduce clean steam supplied by vaporizing softened water in a steam-to-steam generator should be used for humidification for special areas such as transgenic animal housing, barrier housing, and special patient areas (bone marrow transplant etc.). Duct humidifiers should be located downstream of fans. Ductwork within the absorption range of the humidifier should be stainless steel with a drainage facility.

Each individual room should be balanced for the actual airflow requirements (the highest cooling load or makeup air/ventilation airflow requirement). The central supply and exhaust air system should be balanced for the total of individual airflow requirements in each room plus the allowable duct leak based upon the SMACNA duct construction manual. A diversity factor should be applied if a variable air volume system is used. The central supply and exhaust air system should be sized on the basis of the following procedures:

- List the individual room total air requirements accounting for hoods, sensible heat loads, and minimum air change rates.
- Eliminate from the list those laboratory modules that currently have fume hoods.
- Calculate the additional airflow that would be required if 1.2 m, vertical sash fume hoods were added to half the remaining laboratory modules. Assume that the hoods are added to the rooms with the lowest airflows.
- Add the allowable total system duct leakage to the total from the previous item to determine future expansion requirements.
- Size all AHU system components and duct mains to allow for future expansion.

- Include in the system design the required airflow for not only present conditions but also future expansion. In the design calculation, describe the modifications that would be required to achieve the future expansion requirements and the reasoning behind the system sizing, including the life-cycle cost considerations.
- As a minimum, select main supply and exhaust fan motors one size larger than the required motor watts, and size the fan a minimum of 20 percent greater than the required present airflow L/s.
- Size individual exhaust and supply branches for the greater of the present airflow requirement or a 250 mm equivalent duct diameter.

F.11.8 Air-Handling Systems for Animal Research Buildings

The air-handling system design should comply with the requirements described in the *Guide for the Care and Use of Laboratory Animals,* current edition. The animal facility's HVAC system design should be based on 100 percent outdoor air and should automatically compensate for pressure variations due to filter loading. Animal research facility air will not be recirculated. The system should be outfitted with pressure-independent hot water terminal reheating devices and humidifiers and provide individual space temperatures and humidity control. Individual control must be provided for each holding room, treatment room, procedure room, and operating room. The HVAC system shall be designed to individually control and maintain the proper temperature, humidity, differential pressure, and outdoor air exchange rate at all times within the facility. Where it is possible and program permitting, the similar spaces may be grouped to provide a single temperature and humidity control on approval from the Project Officer. The HVAC system capacity should be based on the largest of the five main parameters specified below:

- Minimum ventilation requirements of outdoor air changes per hour throughout the animal use area based in accordance with chapter 21 of the latest ASHRAE *Applications Handbook* and NIH publication *Ventilation Design Handbook on Animal Research Facilities Using Static Microisolators,* Volumes I and II.
- ASHRAE Transactions Section 2000 Volume 106, Part 1, 859-866.
- The amount of fume hood and downdraft table exhaust required to meet actual program requirements if there are animal research laboratories and procedure rooms within the facility.
- The required space-cooling loads to meet environmental conditions specific to the type of animal. This is primarily a function of thermal transmission, solar loads, associated laboratory support equipment, and animal and lighting loads.

- Minimum ventilation requirements as required to support microenvironments in ventilated cage racks.

Flexibility in design for easy conversion of the animal room from static cage racks to microenvironmental ventilated cage rack systems or a combination of both in the future should be provided.

If microenvironments are employed for animal holding, the minimum ventilation requirement may be reduced to 10 outdoor air changes per hour plus the sum of the microenvironment airflow. System connections to microenvironments should be designed to maintain manufacturer-specified criteria. For ventilated rack designs, it is recommended that airflow for animal rooms be derived by adding the airflow required for the animal heat loads of a fully loaded ventilated rack design and adding this airflow required for the room heat loads (lights, people, equipment, etc.). This airflow will be compared with the recommended airflow given by the ventilated rack manufacturers, and the larger airflow will be selected. If the animal room is to be designed for either ventilated racks or static racks, then the ventilated rack air change rate could be superseded by the air change rate required to handle the full heat load of an animal room with static racks.

HVAC systems serving animal facilities should be designed with parallel heating, ventilating, and air-conditioning system arrangements and/or with standby equipment with the capability to ensure continuous operation during equipment failure and scheduled maintenance outages. Parallel operation using two or more pieces of equipment, which operate alternately to meet full load, is the preferred choice. Whenever parallel equipment is not possible, redundancy is required by means of standby equipment that handles the full load and operates when the primary system fails. Each AHU and its related components should be capable of being totally isolated from the remaining operational units to accommodate routine maintenance and emergency repairs.

The exhaust system should be designed for and utilize a multiple-fan exhaust arrangement. The number of fans should be determined by the A/E to accommodate physical and capacity restraints. One of the fans should be provided as a backup for any other single fan. Upon the loss of flow through any one fan, the designated backup fan should be energized to maintain a required exhaust system flow. The fan designated as a backup should be automatically alternated among all system exhaust fans so that all motors and equipment experience approximately the same

running time. Exhaust fan motors and drive must be located out of the airstream. Each fan should be fully isolated from the others to accommodate routine service while the overall system is operational.

In buildings housing both laboratories and other types of space with distinct occupancy zones in which the animal areas are segregated from other types of space, a separate HVAC system for the animal areas is mandated. Both areas may use a common standby unit if the situation permits to save cost. **All toilet and general-use exhaust shall discharge through a separate exhaust system. The HVAC designer is required to obtain approval from the NIH Division of Safety regarding exhaust mixture compatibility to avoid cross-contamination upon system failure or equipment damage due to an incompatible mixture.**

As a minimum, supply air for these areas should pass through a prefilter and final filter on the upstream side of the AHU with efficiencies of 30 percent and 95 percent respectively, based on ASHRAE Standard 52.1-92, atmospheric dust-spot test efficiency. Special areas may require greater filtration on both the supply and the exhaust sides. The requirements for additional exhaust filtration should be coordinated with the NIH Division of Safety, Occupational Safety and Health Branch and Radiation Safety Branch, where specific hazardous program functions occur.

High-efficiency particulate air (HEPA) filtration of supply air may be required for barrier housing or animal-holding rooms housing immunosuppressed or transgenic populations or locations where populations are involved in chronic testing. This is best accomplished by providing HEPA filters in the cage racks housing these species of small animals.

Specialty areas such as operating rooms, recovery rooms, and so on may require higher filtration levels. The A/E should assess the filtration needs for each function in coordination with research personnel.

In animal-holding rooms, supply air must be introduced through high-volume ceiling diffusers and uniformly drawn across animal-housing areas to provide uniform mixing in the room. Where required, a provision should also be made for high exhaust to be activated for directly exhausted cages to maximize the facility flexibility. Care must be exercised to ensure that the system does not create drafts on the animals and that the airflow is uniform in nature. Terminal velocity of discharged air 600 mm from wall surfaces must be less than 0.25 m/s or, in critical areas, 0.15 m/s at head

height. The designer must follow the procedures detailed in *Ventilation Design Handbook on Animal Facility and Animal Facility Design* published by the NIH and the ASHRAE *Applications Handbook*.

Humidity control is critical in animal areas. Higher relative humidity in winter is often required for primates and certain other animals as compared with laboratories. Low-pressure, dry-steam direct injection humidification to introduce clean steam supplied by vaporizing softened water in a steam-to-steam generator should be used for humidification for special animal housing areas, transgenic animal housing, autoclaves and sterilizers, and so on.

F.11.9 Air-Handling Systems for Administration Buildings: Air-handling systems for administrative, office, conference, and other general use facilities are similar in design. They frequently employ variable air volume with terminal zone- or room-heating units. These systems are a recirculating type with ventilation rates designed to meet the latest ASHRAE Standard 62-2001. Air-side dry-bulb economizers provide free cooling when ambient conditions permit.

Air-handling systems for administration buildings are best kept simple and zoned consistent with building use and occupancy schedules. Large conference or assembly areas with intermittent use should not be connected to units that supply routine office space. Air-handling systems found in these buildings may have the following features:

- Single supply and return fans without redundant components
- Night setback and morning warmup control modes
- Mixing plenums with minimum and maximum outdoor air dampers to accommodate minimum ventilation and economizer operations
- 30 percent efficient prefilters and 60 percent efficient afterfilters
- Preheat coils required to support morning warmup functions
- Draw-through chilled water coils
- Central AHU humidifiers only
- 750-1 000 Pa pressure duct distribution to terminal control devices
- Fully ducted return air system with building pressure-controlled relief devices

Computer or data-processing facilities are commonly found in administration buildings and require special consideration. HVAC systems for central computer rooms must meet the special requirements for lower temperatures, controlled

humidity, and extremely high reliability. The suggestions listed below are excerpted from the ASHRAE *Handbook for HVAC Systems and Equipment* and they shall be taken as requirements unless the program dictates specific equipment requirements that need to be further considered. The typical computer room design conditions temperature setpoint and offset shall be 22 ± 1 °C; the RH setpoint and offset shall be 50 ± 5 percent; and filtration shall be 45 percent minimum based on ASHRAE's dust-spot efficiency test. A sensible heat ratio, approximately 0.9 to 1.0, is common for computer room applications.

The air-handling apparatus should be independent of other systems in the building, although it may be desirable that systems be cross-connected, within or without the data-processing area, to provide backup. Redundant air-handling equipment should be evaluated. Ventilation air provided by the building system is acceptable. The refrigeration systems should be independent of other systems and should be capable of year-round operation. It may be desirable to cross-connect refrigeration equipment for backup, as suggested for air-handling systems. **Fire protection for the air-conditioning system should be fully integrated with fire protection for the computer room and the building as a whole.** Computer room systems are attractive candidates for heat-recovery systems because of their large, relatively steady, year-round loads.

Administration buildings traditionally have large glass areas with a large diversity of load based on exposure and occupancy. Careful consideration given to the number and placement of terminal control devices is required. Each unique room should have a separate point of control. Rooms that are similar in size, use, occupancy, and exposure may be combined on a single point of control.

Perimeter radiation should be considered where large glass areas exist and where furniture layouts place seating adjacent to perimeter walls. The controls of radiation should be fully coordinated with other terminal control units so that simultaneous heating and cooling do not occur.

Toilet rooms, janitor facilities, pantries, lunch rooms, copy rooms, and other miscellaneous spaces require exhaust to remove odors and heat from occupied areas. Toilet rooms and janitor closets should be connected to common exhaust systems and be designed to run continuously. Other exhaust may be connected to general exhaust systems that are controlled to operate when central air-handling equipment is operational.

F.11.10 Air-Handling Systems for the Clinical Center Complex: The Clinical Center Complex buildings are generally designed using recirculating-type HVAC systems with various percentages of required outdoor air. Air-handling systems may be of the constant or variable air volume type provided that minimum total occupied air change rates are maintained. Systems should automatically compensate for filter loading and pressure changes. Pressure-independent hot water terminal reheat devices should provide individual space temperature control. The HVAC system should be designed to maintain the proper temperature, humidity, differential pressure, outdoor air exchange rate, and acoustic criteria within the space. The HVAC system capacity shall be based on the largest of the following parameters:

- The amount of total supply air required to satisfy the specific outdoor air exchange rate for each of the various program functions.
- The required space-cooling load, which is primarily a function of thermal transmission, solar loads, associated medical equipment, occupant load, and lighting loads. At the NIH, a combined nominal equipment and lighting load density of 54 W/nm^2 shall be used as a minimum in design of clinical patient trial areas, 22 W/nm^2 for equipment and 32 W/nm^2 for general areas.

HVAC system design for specialty areas such as intensive care units, surgery suites, radiology rooms, cystoscopy rooms, treatment spaces, and so on shall be based on actual loads and design conditions. The A/E should thoroughly review the program of requirements to understand the scope and magnitude of miscellaneous spaces.

Clinical Center Complex buildings should be supplied with multiple manifolded AHUs such that, upon failure of any major component related to an AHU, the remaining available HVAC air-handling equipment will provide 100 percent capacity. A parallel system design using two or more pieces of air-handling equipment that operate simultaneously to meet full-load conditions is the preferred choice to ensure overall system reliability. Each AHU and its related components should be capable of being totally isolated from the remaining operational units to accommodate routine maintenance and emergency repairs.

F.11.10.1 Critical Use Areas: Critical use areas such as operating and cystoscopy rooms should have dedicated air-handling systems that are backed up by the central units for redundancy. Each operating or cystoscopy room should have an individual temperature, humidity, and pressurization control.

Dedicated supply, return, and exhaust air systems serving critical use areas should automatically transfer to emergency power in the event of normal power failure. The supply air system should be single duct with unlined, pressure-independent, constant-volume hot water terminal reheat devices and low-velocity terminal ductwork.

The AHU serving critical use areas should have prefilters, filters, a heating coil, a cooling coil, and a central humidifier (to raise the humidity level to 40 percent RH). The final filters should be located on the discharge side of the supply fan and humidifier with a diffuser section in between to ensure the uniform distribution of airflow over the filter surface.

The supply air duct on the downstream side of the final filters should have air-tight access panels at each elbow and at 6 m intervals on straight duct runs for cleaning and inspection. The air distribution for each operating room should have perforated laminar flow panels positioned around the operating table to maintain a vertical low-velocity, laminar distribution. A minimum of two exhaust registers in each operating room should be located diagonally opposite and 177 mm above the finished floor. The exhaust air quantity should be at least 15 percent less than the supply air (or 47.2 L/s per door minimum) to maintain positive pressure between the operating room and the adjoining areas.

A terminal humidifier on the downstream side of the dedicated constant-volume reheat terminal unit serving the space should maintain the individual humidity for each operating room. Terminal HEPA filters should be considered for use downstream of terminal humidifiers for each operating room.

Each operating room should be furnished with temperature and humidity recorders to keep a continuous record of ambient conditions. In lieu of the chart records, temperature and humidity sensors can be used to record data at the Building Control Center.

Where deemed necessary by program requirements, other areas such as intensive care units, isolation suites, and invasive procedure rooms may also be served by critical use AHUs.

F.11.11 AHUs and Components: The type and construction quality of AHUs approved for use in NIH buildings are based on several factors, such as size, system

features, building types, site restrictions, and so on. The project engineer must carefully review the project design criteria to establish the most cost-effective equipment that provides, throughout the system life, stable and continuous operation. Major unit components should not require replacement until the system life is realized. The following guidelines should be utilized in the design and specification of AHUs:

- Air-handling systems that are generally small in capacity (less than 9 440 L/s), utilize return air, and are not serving critical program functions may be factory-packaged, institutional-grade units.
- Large, central station AHUs (greater than 9 440 L/s) that are recirculating or use 100 percent outdoor air should be a custom-designed, factory-fabricated and -tested unit.
- Large, central station AHUs designed for installation in existing buildings where access is restricted or designed for new buildings where the construction phasing does not permit the installation of large factory-fabricated sections should be custom-designed, field-erected and tested units.

The Basis of Design report submitted by the A/E should define the type and quality of air-handling equipment proposed for use during design. The report should provide justification for equipment selection by the A/E. Factory-packaged, institutional-grade AHUs, when approved for use, should conform to the following criteria:

- Units should be of a modular design and have double-wall casing for all component sections.
- The unit's coil capacity must be able to handle up to 100 percent outdoor air when required, without moisture carryover.
- All unit components must have large, full-height access doors to permit inspection, routine service, and cleaning.
- Unit casings should be pressure rated for the total system design operating pressure plus 25 percent.
- Fan sections, where possible, shall employ airfoil fans with a minimum AMCA Construction Class of II.
- Fan sections should be isolated from the remaining unit and the connecting duct system to control vibration.
- Solid fan shafts only will be considered.

- External fan motors are preferred, and in all cases bearing lubrication lines should be piped exterior to the casing wall.
- Fan volume may be controlled using either inlet vanes or variable frequency fan drives.
- Units shall be in a draw-through arrangement.
- Coil drain pans should be stainless steel and have a positive slope-to-drain connection.
- Factory filter/mixing boxes may be utilized only for low-outdoor-air units and where filtration is limited to 30 percent prefilters.
- Built-up filter/mixing sections utilizing high-quality low-leakage dampers and filter frames installed within insulated metal casings are preferred.
- Waterproof lights at each section of AHU are recommended.

Custom-designed, factory-fabricated AHUs should be based on A/E contract documents and built to specific dimensions indicated therein. The A/E shall lay out, in sufficient detail, the desired arrangement of each complete unit showing all required components, access doors, casing openings, service clearances, and overall dimensions. Layouts should include sections to define the overall height and vertical location of duct connections, dampers, louvers, and so on. The factory-fabricated unit should be capacity and pressure tested as a completed unit at the factory before shipment. Custom-designed units and related air-handling system components should conform to the following criteria:

- Units should be custom engineered and preassembled at the factory on a structural steel base. The units should be shipped as one piece if possible or in as few sections as possible. The number of field-casing joints should be reduced at all reasonable cost.
- Casings should be factory fabricated and double walled with structural, acoustical, and thermal performance certified by testing data. Casings generally have a solid exterior shell with a solid interior shell upstream of final filters and cooling coils. A solid interior shell occurs downstream of final filters and cooling coils.
- Casing access doors are required for both sides of heating/cooling coils, fans, filters, dampers, sound attenuators, heat recovery devices, humidifiers, and any other component requiring routine service. Access doors, where possible, should be man sized (600 x 1 829 mm), have vision panels, and seal with the air pressure.

- AHU component sections should be supplied with suitable vapor-tight lighting to permit maintenance functions. Lights are typically controlled from a pilot switch located adjacent to the access door.
- Unit louvers should be AMCA rated and selected for low-pressure drop with less than 0.003 kg/m^2 penetration at 3.8 m/s free-area velocity. Areaways for louvers should have a minimum of two drainage points sized for full capacity. Areaway floors should be sloped a minimum 8 percent to drain.
- Dampers should be low leakage and opposed or parallel blade as required, accommodating mixing of airstream. Opposed blade dampers are required for nonmixing applications. Particular attention should be given to achieve good mixing of outdoor and return air to minimize stratification and freezing of water coils. Air blenders should be considered for use when airflow arrangements do not support the effective mixing of different airstreams.
- Air filters may consist of cartridge-type elements; roll filters are not acceptable. Their design face velocity should not exceed 2.5 m/s nor should manufacturers' standard nominal ratings be exceeded. The preferred filter face section dimensions are 600 x 600 mm. Outdoor air and return air as applicable should pass through prefilters. All filter banks should have intermediate supports to prevent bank deflection at maximum design pressure differentials.
- Minimum 30 percent efficient filters should be installed upstream of any heat recovery device.
- Preheat coils may be propylene glycol or hot water, steam, or steam with an integral face and bypass damper. All coils should have copper tubes with aluminum fins and galvanized casing. Steam coils should be drainable with vertical tubes and vacuum breakers. Glycol coils are generally preferred over hot water coils for added freeze protection. Hot water coils should have duplex coil-circulating pumps on a return line with automatic lead-lag control isolation check valves and provide 100 percent emergency power in the event of a pump failure. An individual starter should be provided for each pump.
- Cooling coil velocity should not exceed 2.5 m/s at maximum future and present design conditions. For new buildings, a coil shall be sized for a nominal face velocity not to exceed 2.0 m/s so that future growth can occur. Coils should have copper tubes with aluminum fins and stainless steel casing. Intermediate stainless steel drain pans should be provided for each coil bank more than one coil high. The cooling coil section should have a stainless steel drain pan and a positive slope-to-drain bottom connection. Pan drains should be properly trapped. For draw-through units where the drain pan is on the fan side, to counter the negative pressure on the trap relative to the outside, the trap height must account

for the static pressure in the reverse direction. Where blow-over units are approved, the drain pan on the discharge side of the fan must have a sufficient trap height to account for the static pressure in the unit. Static pressure conditions accounting for the dirty filter must be used to calculate the trap height.

- AHU fans may be vane-axial, airfoil centrifugal (single or double width) or plenum fans as justified by life-cycle costing. Fans should have a minimum AMCA Construction Class of II. Fans should be totally isolated from the unit using inertia base and spring isolation. Fan volume control may be achieved using controllable pitch vanes on axial fans and either inlet vanes or variable frequency drives on centrifugal and plenum fans. Discharge dampers are not suitable for volume control. Fans shall be arranged in the draw-through position. Redundant or parallel fans should be installed in separate compartments and be capable of complete isolation.
- Where possible, sound attenuators should be integrated as a part of the AHU. The large cross-sectional area of most units results in low attenuator velocity and a corresponding pressure drop while maximizing the attenuator's performance. The silencer rating should be determined in a duct-to-reverberant-room test facility, which provides airflow in both directions through the test silencer in accordance with ASTM E477.
- Custom units must be designed to be totally isolated from other adjacent units so that routine maintenance can occur with the unit off and other units operational. Ultra-low leakage, industrial-quality isolation dampers should be installed at the discharge of manifold units.
- Each AHU section should be provided with drainage facilities that permit the washdown of units and contain leaks resulting from coil failures.
- Casings should be constructed in a water- and air-tight manner. The manufacturer's standard cabinet construction should result in the latest ASHRAE/ANSI Standard 111 leakage class of less than 9 for demount units as measured in accordance with AMCA Standard Z10-85. The fully assembled unit should have a maximum air leakage rate of 1 percent of the supply air volume.
- Custom-designed, field-erected AHUs should be similar in many respects to those that are factory fabricated. These units basically arrive at the job site as individual components that must be assembled on concrete pads or curbs to form the unit. Casing construction quality and erection procedures are extremely important on these units. Poor-quality casings result in excessive AHU leakage and poor system performance. Contractor-shop-fabricated casings or filter frames are prohibited.

- When heat recovery equipment is used, the heating and cooling coils should be designed to function at full load with or without energy recovery. All coil schedules should show both entering and leaving air and glycol/water conditions. Units with heat recovery systems should be designed such that devices could be out of commission without any interruption to AHU system operation.

Humidifiers for central station AHUs should be of the dry-steam, manifold-jacketed or panel steam humidifiers (atomizing steam humidifier) type and be located in the duct system where possible. Ductwork within the absorption range of the humidifier should be at minimum 2 m upstream and downstream fully welded stainless steel and pitched to drain. Steam lines serving humidifiers should have an automatic isolation valve and be dripped to remove condensate prior to manifold. The isolation valve should be closed during cooling mode to prevent additional heat gain in the duct system. A high-limit humidity controller must be provided for each humidifier.

The installation of heating and cooling coils in AHUs often creates long-term maintenance problems. Coils installed in either factory-packaged or custom-designed units, if not properly engineered, will not be serviceable and will eventually fail to perform. The following issues shall be specifically addressed for all coil installations:

- Individual coils must be fully accessible on both the upstream and downstream sides to permit inspection and cleaning.
- The cooling-coil face velocity must be limited to 2.5 m/s across the entire face area to prevent carryover at maximum future and present design conditions. Air distribution plates may be considered for use upstream of coils, but plates induce a high pressure drop and should be avoided where possible.
- Moisture eliminators may be considered where carryover presents a problem; however, eliminators must not impede service access to the coil surface for cleaning.
- Multiple coils are often required to provide the total capacity of individual units. Coils shall be a maximum of 3.0 m long by 0.91 m high and be capable of replacement without major rigging. Individual coils must be removable without disturbing pipe headers or other coils.
- Multiple coils should be valved separately so that, if any individual coil fails, it can be isolated and drained while the remaining coils stay in operation. Return header for multiple-stacked coils should be piped reverse return to assist a balanced water flow at all load conditions.

- All coils should have integral vent and drainage ports. Steam coils should be nonfreezing vertical tube where installation is possible and provided with steam vacuum breakers, not check valves located outside the airstream. Condensate should not be lifted downstream of steam coils. Condensate lines should not be designed to discharge under pressure. There should be a hydraulic head between the coil and steam trap of 450 mm minimum.
- Even and consistent airflow across the entire coil surface is extremely important. Upstream mixing and the use of air blenders should be carefully considered.
- Coil bank supply and return mains or steam and condensate mains should have manual isolation valves so that the entire unit can be drained.
- Trainers should be provided on the feed line for each coil bank. Control and balancing valves should be installed on the return line for water coils. Balancing valves should be specifically designed for balancing and have integral memory stops. Combination balancing, shutoff, and flow meter devices are not acceptable.
- One-third and two-thirds steam control valve arrangements with a manual bypass valve should be considered for large steam coils to improve control and operating efficiency. Steam mains should be dripped prior to control valves.
- Float and thermostatic traps should be used on steam coils. Trap bypass lines should not be used; dual traps may be considered.
- Factory-packaged units should have offset coil pipe headers to allow individual coils to slide out of unit casings.
- Face and bypass coil arrangements used for temperature control in AHUs have not performed well at the NIH, nor have they provided the level of performance needed for proper operation. Integral face and bypass steam coils are preferred over standard face and bypass coils.
- Hot water preheat coils should be designed for parallel flow-circuiting. The counter flow-circuiting, particularly with long coils, is dangerous because the cold air is in contact with the coldest water. Hot water flow should be maintained through the unit by a pump system in conjunction with use of a three-way control valve and a minimum of 40 percent glycol mixture as an antifreeze solution during freezing weather.

The A/E should give careful consideration to the location of the supply air fan with respect to coil banks. Excessive air velocity stratification across the face of a coil may affect the capacity, pressure drop, and water carryover characteristics. Thus, the location of the fan with respect to the coil bank is very important. Generally, if the air velocity across the coil does not vary by more than ±10 percent of nominal,

essentially full capacity will be achieved and water carryover will not be a problem. However, if the air velocity stratification is greater than this, capacity reduction, carryover, and freeze-up problems could occur. When space limitations dictate that the fans be placed in close proximity to the heating or cooling coils, the following criteria should be used to determine the minimum distance between fan and coil for field built-up systems:

Draw-Through System: For single-width fans, the distance between the fan intake and coil should be a minimum of one wheel diameter. For double-width fans, the distance between the fan intake and coil should be a minimum of one-half wheel diameter.

Blow-Through System: Most problems occur in this type of system. To minimize space requirements, it is desirable to place the coil as close to the fan as possible. The minimum distance for satisfactory operation is a function of the dimensional relationship of fan to coil, fan outlet velocity, coil face velocity, and coil pressure drop.

When the coil must be located closer to the fan, baffles can be added on the face of the coil to increase their pressure drop to the required valve. Another possibility, which is usually reserved for field fixes, involves the installation of a baffle plate. A baffle plate with 50 percent free area should be placed two-thirds of the distance from the fan discharge to the coil. This baffle plate should have an overall area equal to four times the area of the fan outlet and be approximately the same shape. The pressure loss across this baffle will vary, of course, depending on the distance between the fan discharge and coil and the fan outlet velocity.

The contract documents should specifically address the placement of the fan with respect to the coil. Whenever possible, the fan should be placed with the outside of the fan scroll at or near the top or bottom of a coil bank.

F.11.11.1 Fans: Fans should be individually selected for their specific application on NIH projects. Many different fan types and arrangements exist in the marketplace from a large variety of manufacturers. The project engineer has the responsibility to select the fan and specify its requirements to meet the functional needs of the system while providing stable, efficient, and quiet operation. Fan selections should be based on the lowest reasonable speed while optimizing efficiency. Fan selections should consider longevity of components, especially bearing life at maximum design conditions.

Inlet vanes may be considered for use in varying air volume. The A/E shall evaluate the effects of low-frequency radiated noise on the system. During periods of normal building occupancy, most systems typically operate in the range of 50 to 80 percent design capacity. Therefore, the fan that has been selected on the basis of 100 percent design capacity will be functioning most often at a throttled or reduced capacity. As air volume is reduced, an increase in fan-generated noise results. An example is an application in which the pressure rise across the fan at design capacity may be 1 121 Pa, and the system static-pressure controller is set at approximately 374 Pa. Under these conditions, a commercial-quality, airfoil double-inlet double-width fan seldom achieves a static efficiency greater than about 60 percent even with the inlet valves set at full-open position. It is the presence of inlet vanes, even when in the full open position, that limits the achievable fan static efficiency. As the inlet vanes close to reduce air capacity from 100 percent to, for example, 65 percent of design, the operating fan efficiency drops dramatically. At 65 percent of the design, the air horsepower developed by the fan (proportional to air volume x total static pressure) is only about 40 percent of that produced at design capacity. However, by using inlet vanes to modulate flow, the reduction in brake horsepower is only about 12 percent. This condition is the result of the changes in the shape of the fan-characteristic curve that occurs with orientation of the inlet vanes. These changes result in a decrease in fan static efficiency from an initial value of about 60 percent to approximately 37 percent. This significant change in fan efficiency has an enormous effect on fan-generated noise. Rather than a reduction of 6 dB, which might have been expected before the lower air volume and total static pressure, an increase of about 6 dB will occur owing to the decreased fan efficiency. This increase in noise level typically appears in the low-frequency region of the spectrum and is perceived by the ear as an increase in the level of system rumble. Furthermore, at this reduced airflow condition, the masking level of diffuser-generated noise is typically about 10 dB lower than at maximum design airflow. Thus, with the beneficial mid- to high-frequency masking noise significantly reduced, the occupant's perception of low-frequency rumble will increase.

All fans must be fully accessible for service and routine maintenance. Fan motors and drives should not be located within hazardous or contaminated exhaust airstreams. Fan bearings where possible should be serviceable outside hazardous or contaminated exhaust airstreams. Inline fans with motors or drive exposed to exhaust airstreams are not permitted.

Fan systems designed for parallel or manifold operation should be protected against backward rotation of fan wheels. Anti-rotation devices, motor brakes, or other approved methods should be considered for use on these systems. Solid fan shafts should be furnished whenever possible as an option.

Fans should have a certified sound and air rating based on tests performed in accordance with AMCA Bulletins 210, 211A, and 300. See AMCA Standard 99, *Standard Handbook*, for definitions of fan terminology. The arrangement, size, class, and capacity of all fans should be scheduled on the contract drawings for permanent records.

All fans should be statically and dynamically balanced by the manufacturer and should be provided with vibration isolation. Fans should not transmit vibration to the duct system or building structure. All fans 18.7 kW and larger should also be dynamically balanced in the field by the manufacturer after the installation is complete.

Diffuser cones and inlet bells are not permitted in rating a fan unless they are an integral part of the fan design. Inlets and outlets of fans not duct connected, including fans in plenum chamber or open to the weather, should have heavy, OSHA-approved guard screens to protect personnel. Guard screens should not impair fan performance and, when bolted to equipment, will permit their removal for fan service and cleaning.

Complete fan lubrication facilities should be provided, such as oil reservoirs, sight glasses, grease and relief fittings, fill and drain plugs, pipe connections, and so on. The facility should be placed in a readily and safely accessible location so that after installation they will perform the required function without requiring the dismantling of any parts or stopping equipment. For fans located within AHU casings, lubrication facilities should be piped to the exterior casing wall.

All parts of fans should be protected against corrosion prior to operation of the fan. Exhaust fans should be specifically addressed, as the airstream may contain excessive moisture, fumes, corrosive vapors, or contaminated or hazardous particles. Special consideration should be given to those fans handling explosive vapors or radioactive material.

Certified performance data including acoustical data should be submitted for each fan at maximum design conditions. Data should include published sound power levels based on actual tests on the fan sizes being furnished and conducted in accordance with current AMCA standards. Such data are to define sound power levels (PWL) (10^{-12} W for each of the eight frequency bands). The acoustical design of the fan system must conform to the space noise criteria. Fan curves should be submitted that will depict static pressure, total pressure, brake horsepower, and mechanical efficiency plotted against air volume. Fan curves should include estimate losses for field installation conditions, system effect, and actual installed drive components. All included losses should be defined on the fan curves. Data may also be submitted in tabular form, but tables are not a substitute for actual performance curves.

Each motor-driven fan should be equipped with a V-belt drive, except those that are direct drive by design. Where factory-designed and assembled belt drives that do not conform to the following are proposed to be furnished, such nonconformity must be noted on the shop drawing submittals and may be cause for rejection of the item. OSHA-approved mesh-type guards should be provided for all belt drives.

Each drive should be selected according to the rating and recommendations of the manufacturer for the service for which it will be used, giving proper allowance for sheave diameter, center distance, and arc of contact less than 82 °C. The motor drive should have a centrifugal fan, with forward curved blades and a nameplate rating of not less than 5 percent above the total of actual fan brake horsepower and drive loss at specified capacity.

Belts should be constructed of endless reinforced cords of long staple cotton, nylon, rayon, or other suitable textile fibers imbedded in rubber. The belt should have the correct cross-section to fit the sheave grooves properly. Belts should be matched carefully for each drive. Extended-horsepower belts are not acceptable.

Motor sheaves should be adjustable pitch type for 18.7 kW and less and selected so that the required fan rotational speed will be obtained with the motor sheave set approximately in mid-position and have the specified pitch diameter in that position. Fixed-pitch sheaves should be installed on fans 22.4 kW and larger. All multiplex belt drive assemblies regardless of horsepower should be fixed-pitch type. Variable-pitch drives should be used for all fans to accommodate initial fan balancing and converted to fixed-pitch where required when balancing is complete.

Fan motors should have the capacity needed to operate the equipment at the specified mid-position operating condition. Where non-overloading motors are specified, the motor capacity rating at the most closed position of the motor sheave shall be selected. In no case should motors be a smaller size than that required to operate without overload. **Fan sheaves shall not be smaller in diameter than 30 percent of the fan wheel diameter.**

Sheaves should be constructed of cast iron or steel, bored to fit properly on the shafts, and secured with keyways of proper size (no setscrews). Keyways may be omitted for sheaves having 15 mm or smaller bores, where setscrews may be used. **Fans should be furnished complete as a package with motors, drives, curves, bases, and inlet and outlet fittings. Detached vibration isolation devices may be provided separately.**

F.11.11.2 Duct Design and Components: The duct system design for NIH buildings should consider space availability, space air diffusion, noise levels, duct leakage, duct heat gains and losses, balancing methods, fire and smoke control, initial investment cost, and system operating cost.

Deficiencies in duct design result in systems that operate incorrectly or are expensive to own and operate. Poor air distribution can cause discomfort; lack of sound attenuation may permit objectionable noise levels; and poorly designed sections of ductwork can result in an unbalanced system; faulty duct construction or lack of duct sealing produces inadequate airflow rates at the terminals; and insufficient duct insulation leads to excessive heat gain or loss and contributes to condensation problems.

The duct system design should be based on ASHRAE and SMACNA standards. Duct construction should be suitable for the operating parameters of the system and be tested to prove compliance with project specifications.

Fans in the field typically show a lower performance capacity than manufacturers' ratings. The most common causes of deficient performance of the fan/system combination are improper outlet connections, non-uniform inlet flow, and swirl at the fan inlet. These conditions alter the aerodynamic characteristics of the fan so that its full flow potential is not realized. One bad connection can reduce fan performance far below its rating. The project engineer must consider potential field conditions and performance penalties in the final selection of fans.

Normally, a fan is tested with open inlets and a section of straight duct attached to the outlet. This setup results in uniform flow into the fan and efficient static pressure recovery on the fan outlet. If good inlet and outlet conditions are not provided in the actual installation, the performance of the fan suffers. To select and apply the fan properly, these effects must be considered, and the pressure requirements of the fan, as calculated by standard duct design procedures, must be increased.

To achieve rated fan performance, air must enter the fan uniformly over the inlet area in an axial direction without prerotation. Non-uniform flow into the inlet is the most common cause of reduced fan performance. Such inlet conditions are not equivalent to a simple increase in the system resistance; therefore, they cannot be treated as a percentage decrease in the flow and pressure from the fan. A poor inlet condition results in an entirely new fan performance. Many poor inlet conditions affect the fan more at near-free delivery conditions than at peak pressure, so there is a continually varying difference between these two points. The engineer must provide adequate space so that fan layouts can accommodate ideal inlet conditions. Poor fan layouts result in increased operating cost and deficient performance.

Since duct systems can convey smoke, hot gases, and fire from one area to another and can accelerate fire within the system, fire protection is an essential part of air-conditioning and ventilation system design. NIH guidelines and life safety codes require compliance with NFPA Standards 90A and 90B, which examine fire safety requirements for ducts, connectors, and appurtenances; plenums and corridors; air outlets, air inlets, and fresh air intakes; air filters; fans; electric wiring and equipment; air cooling and heating equipment; building construction, including protection of penetrations; and controls, including smoke control.

Leakage in all unsealed ducts varies considerably with the fabricating machinery used, the methods for assembly, and installation workmanship. For sealed ducts, a wide variety of sealing methods and products exist. Each has a relatively short shelf life, and no documented research has identified the in-service aging characteristics of sealant applications. Many sealants contain volatile solvents that evaporate and introduce shrinkage and curing as factors. Surface cleanliness and sealant application in relation to air pressure direction (infiltration and exfiltration) are other variables. With the exception of pressure-sensitive adhesive tapes, no standard tests exist to evaluate the performance and grade of sealing products. Project specifications and ductwork plans should define the duct construction method and

seal class A, sealing materials, and acceptable leakage rates for each application. Duct pressure tests should confirm construction quality and actual leakage rates.

Duct system design and air device selection and layout must consider the architectural aspects of the building. Ductwork must fit within the allocated space and not require the lowering of ceilings. Duct design must allow for easy adjustment and maintenance of required components. Air device locations must be coordinated with architectural reflected ceiling plan, bulkheads, lighting coves, and other special features. Air distribution systems are an integral part of the building and must be designed to meet the stated design criteria efficiently without generating noise, creating drafts, or causing thermal imbalances or poor IAQ.

Supply, return, exhaust, and outside air should be ducted for all spaces, i.e., not taken through ceiling plenums, shafts, mechanical equipment rooms, corridors, or furred spaces. Generally, the circulation of air directly between areas is not permitted, except into toilet rooms, locker rooms, and janitor's closets. Circulation may also occur between adjacent corridors into a negative pressure area or out of positive pressure areas. Makeup air for kitchens or other food preparation areas may come from adjacent dining areas, since these areas are usually negative with respect to adjacent areas.

Conditioned air should be supplied to corridors to maintain design temperatures and as required to make up exhaust through negatively pressurized rooms opening directly to the corridor. The quantity of conditioned air to the corridors should be sufficient to maintain an overall positive building pressure. The A/E should develop a pressurization diagram as part of construction documents.

The supply air distribution system must be designed to minimize turbulence and to avoid impacting the performance of primary containment equipment such as chemical fume hoods and biological safety cabinets. Therefore, perforated ceiling panels located away from the containment devices are recommended to provide even and low terminal velocity performance instead of grilles, registers, and ceiling diffusers. If ceiling diffusers are used, the device should be placed away from the front of the hood, the quadrant of the device that blows at the hood face should be blocked, and the throw velocity of the device should be designed for no more than one-half to two-thirds of the hood face velocity.

Air distribution devices should be selected for each specific application. Many different types and styles of air devices are available in the marketplace to meet the

various performance criteria. Discharge velocity, diffusion pattern, throw, terminal velocity, volume control, noise generation, and appearance are factors to be considered in device selection.

Air devices should be selected to provide a uniform, quiet, and low-velocity distribution covering the majority of the occupied area. Air devices should not dump the air, create drafts, or generate turbulence within rooms. Certain areas may require laminar flow devices to keep contaminants controlled below work areas until they are exhausted. ASHRAE's *HVAC Systems and Equipment Handbook*, Air-Diffusing Equipment chapter, reviews the general application of the various air devices.

The terminal velocity of discharged air 0.61 m from wall surfaces desirably should be less than 0.25 m/s. Where applications become more critical, such as for laboratories, animal research facilities, and treatment/procedure rooms, the terminal velocity should not exceed 0.15 m/s at 1.8 m above floor height.

Table F.11.11.2.a summarizes the acceptable velocities for HVAC components and duct systems. Louvers require special treatment since the blade shapes, angles, and spacing cause significant variations in a louver-free area, pressure drop, and water penetration. Louver selections should always be based on data obtained in accordance with AMCA standards.

Table F.11.11.2.a Typical Design Velocities for HVAC Systems

Element	Face Velocity (m/s)
Ductwork	
Medium pressure mechanical rooms/shafts Occupied areas	12.7 10.2
Low-pressure mechanical rooms/shafts Occupied areas Terminal outlets	7.6 6.1 3.8
Outdoor/relief air	7.6
Cooling/dehumidifying coils	2.5 maximum
Heating Coils	
Steam/hot water unit Ductwork Electrical	2.5-3.8 7.6 maximum per mfg. data

Element	Face Velocity (m/s)
Filters	
Viscous impingement	1.0-4.0
Dry-type, extended-surface Flat (low efficiency)	 duct velocity
Pleated media	2.5 maximum
HEPA	1.3 maximum
Louvers	
Intake Exhaust	2.5 maximum 3.8 maximum

Ductwork may be either single- or double-wall construction as required to satisfy the acoustical requirements specified in these guidelines. Double-wall construction should consist of a perforated liner surface with an approved film-covering acoustical material. Terminal unit sound attenuators having a construction similar to double-wall ductwork may be utilized for room noise attenuation. The use of internal sound lining is prohibited at the NIH.

Ductwork may consist of either round, flat-oval, or rectangular shapes as needed to suit the building. Duct fittings, joint methods, supports, and construction details shall meet the requirements of SMACNA. All fittings should have documented flow loss coefficients by either SMACNA or ASHRAE. Irregular or makeshift fittings are not acceptable. Factory-fabricated fittings by independent manufacturers may be utilized provided they have catalogued performance criteria.

Flexible ductwork may be utilized for supply air application to connect air devices to low-pressure duct mains and to make the final connection to terminal units. Flexible duct runs should be limited to 600 mm for terminal units and 1 800 mm for air devices. Flexible ducts shall have a UL-rated velocity of at least 20.3 m/s and a maximum UL-rated pressure of 2 490 Pa positive. Flexible ducts must be factory insulated and comply with the latest NFPA Standards 90A and 90B. Flexible duct joints should be made using stainless steel draw bands and manufacturer-approved tape.

The project engineer for each unique system installed on the project shall specify the duct construction method, material of construction, and pressure classification. Table

F.11.11.2.b shows the minimum requirements for generalized applications in NIH buildings.

Table F.11.11.2.b Minimum Duct Construction Standards

Application	SMACNA Pressure Classification	Materials	Field Pressure Testing
Low-pressure supply ductwork	498 Pa POS	galvanized steel	No
Medium-pressure supply ductwork upstream of terminal units	1 494 Pa POS	galvanized steel	Yes
Low-pressure supply ductwork downstream of terminal units	498 Pa POS	galvanized steel	No
Low-pressure outdoor, relief, return air ductwork	498 Pa POS	galvanized steel	No
Medium-pressure return duct work downstream of terminal units	1 000 Pa NEG	galvanized steel	Yes
Low-pressure general exhaust ductwork	498 Pa NEG	galvanized steel	No
Low-pressure wet process exhaust ductwork	498 Pa NEG	aluminum or stainless steel	No
Low-pressure hazardous exhaust ductwork upstream of terminal unit	498 Pa NEG	epoxy-coated galvanized steel or stainless steel	No
Medium-pressure hazardous exhaust ductwork downstream of terminal units	Class I/industrial 1 494 Pa NEG	epoxy-coated galvanized steel or stainless steel	Yes
Special hazard exhaust ductwork	1000 Pa NEG	stainless steel	Yes

Note: Galvanized steel duct may be used in lieu of epoxy-coated or stainless steel duct per IMC recommendations if corrosion-inducing chemicals are not used in the fume hoods.

Those duct systems requiring field pressure testing should be tested at 125 percent of the duct construction rating. Pressure testing shall conform to the SMACNA *HVAC*

Air Duct Leakage Test Manual. The positive pressure side of any exhaust system installed within a building should be pressure tested to 150 percent of the duct construction rating.

Wet exhaust ducts or those duct systems that tend to carry moisture should be pitched toward the source of moisture generation. Drainage facilities should be provided in these systems.

The term "hazard exhaust" generally applies to common exhaust systems serving laboratories, fume hoods, animal research facilities, biosafety cabinets, and so on, which, by their relatively light hazard rating, may be exhausted by a common exhaust system serving BSL-2 areas.

The term "special hazard" generally applies to all other exhaust systems serving BSL-3, BSL-4, radioactive hoods, and so on, which, by their critical nature or extreme hazard, must be exhausted individually and normally require special filtration.

Wet-exhaust ductwork should be of either aluminum or Type 304 stainless steel construction to prevent corrosion. Hazardous exhaust or special exhaust ductwork should be at least Type 304 welded stainless steel or better as required to handle exhaust products.

F.11.12 Separation of Intakes and Exhaust: Outdoor air intake and exhaust discharges should be located to avoid health hazards, nuisance odors, reduction in capacity of air-conditioning equipment, and corrosion of equipment caused by reentry of exhaust air from any source. The A/E should ensure that no cross-contamination will occur from exhaust discharges to outdoor air intakes.

Outdoor air intakes are classified as any louver, duct, gooseneck, ventilator, or grate pipe that is commonly used to take in outdoor air for the purpose of ventilation, heat removal, exhaust makeup, combustion air, air compressor makeup, or comfort conditioning. Exhaust discharge includes that from exhaust fans, vehicle exhaust, cooling towers, boiler or incinerator stacks, emergency generators, vacuum pumps, steam or other hot vents, plumbing vents, condensing units, kitchen hoods, relief from AHUs, and mechanical/electrical room ventilators.

Separating air intake and exhaust air outlets by at least 3.05 m as recommended by codes is a minimum requirement under normal conditions. Other factors such as wind direction, wind velocity, stack effect, system sizes, and height of building and security concerns must be evaluated, and location of intakes and outlets should be adjusted as required. The ASHRAE *Fundamentals Handbook* is a source for analyzing these factors. The facility manager should be consulted in the areas of physical security for placing air intake and exhaust. A common sense approach is required by the designer to evaluate the vulnerability of the HVAC system to a deliberate attack.

A wind analysis performed by a qualified wind consultant is recommended to analyze and make recommendations on these factors. The primary building exhaust stack locations and heights shall be in concurrence with air dispersion modeling. The bottom of all outdoor intakes should be located as high as practical but not less than 1.8 m above ground level, sloped or vertical not horizontal.

A computational fluid dynamics (CFD) analysis must be performed to access reentrainment of exhaust air from one building entrained back into the supply duct of the same building or an adjacent building.

The CFD model should be constructed to include the building under design, the buildings immediately surrounding the building under design, the exhaust and air intake vents of the buildings, and any other sources or obstacles that could affect the air intake of the building under design.

It should be noted that certain factors should be considered in the evaluation of external flow type scenarios. First, the size of intakes, chimneys, and so on in an external flow problem in comparison to the overall size of the solution domain considered is usually small. In terms of creating computationally tractable problems, it is difficult to resolve the grid close to these sources of heat, momentum, or concentration without being subject to numerical diffusion. To highly minimize the numerical diffusion augments and the effective viscosity, the solution domain should use advance grids (meshing) or higher order differencing schemes. Second, the most widely accepted turbulence model used in CFD, namely the k-turbulence model, over-predicts turbulent viscosity in regions of decelerating flow. Therefore, the model should be based on the assumption that the turbulent viscosity is the same in all three coordinate directions; that is, the viscosity is orthotropic. This is untrue for highly curved, swirling, or buoyant flows. All of these forms of flow regime

are typically present in external flows of interest to some extent. The effects of this can be offset by alternatives, but they are subject to various problems.

To alleviate the concerns from the numerical simulation aspect, a series of grid refinement tests should be carried out to minimize the effect of numerical diffusion in this calculation. The numerical diffusion in three dimensions can be approximated, using Patankar (1980), as:

$$\Gamma = \rho V \left[\frac{d_x d_y n_x n_y}{d_x n_x + d_y n_y} + \frac{d_y d_z n_y n_z}{d_y n_y + d_z n_z} + \frac{d_z d_x n_z n_x}{d_z n_z + d_x n_x} \right]$$

where:

Δ = fluid cell density
V = fluid speed
(n_x, n_y, n_z) = unit vector // to flow
d_x, d_y, d_z = cell dimensions

Owing to the complex nature of this, the approach and the methodology of these calculations need to be agreed upon between the NIH and the contractor.

The results of such tests will be approved by the NIH. If it is found that the numerical diffusion issue cannot be addressed in a single model, then a “zoom-in” approach will be used. In this zoom-in approach, an initial model will be constructed that will represent the laboratory building plus all the surrounding buildings. The results from this initial simulation will then be taken from a volume immediately surrounding the laboratory building and applied to a second model that represents only the laboratory building and its immediate surroundings. If necessary, grid refinement tests will also be applied to the second model to ensure that numerical diffusion is eliminated as much as possible.

The following will be considered in this study. (Details and clear methodology for the calculations will be provided by the NIH. Contact Farhad Memarzadeh, Ph.D., P.E., ORF, for assistance and guidance.)

- A methodology for the calculation of reentrainment into the building.
- A methodology for the calculation of odor and health threshold limits (in mg/m^3) and their comparison against the numerical analysis data.

- A methodology for the determination of pass/fail criteria based on the threshold limit.
- Alternate wind speeds and directions from appropriate wind rose data.

Outside air intake should be at least 12 m away from hot exhaust discharging horizontally or deflected down, plumbing vents, animal room exhaust, generator exhausts, loading docks, boiler flues, automobile entrances, driveways, passenger dropoffs, cooling towers, and incinerator and boiler stacks.

The A/E should use data, formulas, and other design information as published by ASHRAE, ANSI, and other sources in designing the exhaust stack height and velocity characteristics to overcome the building cavity boundary and avoid reentrainment of exhaust. Stacks shall be shown as part of the architectural design and the design rationale described in the early design submittal. In general, exhaust stacks should:

- Be in a vertical direction at a minimum of 3 m above the adjacent roofline and so located with respect to opening and air intakes to avoid reentry of contaminants into any building.
- Have a discharge velocity of at least 20 m/s.
- Be designed so that aesthetic considerations concerning external appearance are not allowed to overcome the above requirements and the safe discharge of exhaust.
- Be designed so that, where possible, multiple-manifold exhaust fans have separate exhaust stacks to avoid a positive pressure condition on the dischargeable side of an inoperable fan.

F.11.13 Exhaust Systems: NIH buildings typically contain a large variety of exhaust air systems that serve a multitude of program functions. The primary purpose of any exhaust system is to remove odors, vapors, hazardous materials, or other contaminants from buildings to protect the health and safety of building occupants. Exhaust discharge must be designed to prevent the reentrainment of exhaust back into outdoor air intakes.

F.11.14 General Exhaust Systems: The systems covered under this category are conventional, low-pressure, low-velocity types, serving toilets, locker facilities, janitor's closets, soiled utility rooms, laundries, and trash rooms. The general exhaust system also includes areas with 100 percent exhaust requirements dictated

by ventilation standards. The specific examples under this classification are central sterile supply areas and kitchens.

General exhaust systems are typically simple in design with control limited to start-stop modes as a function of occupancy schedule. Systems are low velocity without terminal control devices or redundant fans. General exhaust fans are typically supplied by normal power only. General room exhaust air should be exhausted through ceiling registers located over heat-producing equipment such as copiers, refrigeration equipment, appliances, computer equipment, and so on.

Wet exhaust from shower rooms and process areas is frequently handled by these systems. The moist air over sterilizers, glass/dishwashers, cagewashers, and pot-washing equipment should be captured using canopy-type stainless steel hoods. Exhaust air should be at a minimum rate of 254 L/s/m^2 of hood area. Canopy hood duct connections should be fitted with moisture eliminators. Wet exhaust systems, where possible, should be separated from other general exhaust, and ductwork shall be either stainless steel or aluminum pitched toward inlets for drainage.

Air may be exhausted from the corridor through toilet rooms, bathrooms, and janitor's closets if necessary. Exhaust air shall not be drawn directly from a public corridor through any storage room.

All kitchen or pantry hoods are furnished as dietetic equipment including the canopy hood over pot-washing stations. These hoods are furnished by the fabricators of the kitchen equipment and serve:

- Grease-producing equipment such as griddles, ovens, broilers, and deep-fat fryers
- Hot vapor-producing equipment such as steam kettles, vegetable steamers, and high-pressure cookers

The exhaust systems serving these hoods have the following specific requirements. Filtered (30 percent efficient, Grade D) unheated and uncooled outside air shall be at the rate of 155 L/s per linear meter of slotted perimeter of the hood as the makeup air to meet the exhaust needs. Assume a 37 Pa water-gauge static pressure drop through the hood.

The remaining makeup air at the rate of 232 L/s per linear meter of slotted perimeter of the hood should be derived from the environmental air supplied by the kitchen and/or dining room AHUs.

Exhaust of 387 L/s per linear meter of slotted perimeter using a dedicated exhaust fan for each hood and 335.28 Pa static pressure drop through the hood should be assumed. See NFPA Standard 90A for the specific requirements of duct velocity, access, material, construction, and routing. Automatic operation should be provided for the exhaust fan through the hood control panel (furnished with the hood) for washdown cycle and fire protection.

F.11.15 Laboratory Exhaust System: The laboratory exhaust system, where there is no mixture incompatibility, should be arranged with multiple-manifolded fans designed to maintain 100 percent of exhaust design conditions at all times. The number of fans should be determined by the A/E to accommodate physical and capacity restraints. One of the fans should be provided as a backup for any other single fan. Upon the loss of flow through any one fan, the designated backup fan should be energized to maintain a constant exhaust system flow. The fan designated as a backup should be automatically alternated among all system exhaust fans so that all motors and equipment experience approximately the same running time. Exhaust fans should be of industrial grade with motor and drives located out of the airstream. Each fan should be fully isolated from the others to accommodate routine service while the overall system is operational.

The laboratory exhaust system should account for filter loading (only where filtration is a requirement) and will generally combine general laboratory and fume hood and biological safety cabinet exhaust for maximum optimization of space and to achieve better dilution levels with acceptable concentration rates. The system can generally be designed to exhaust laboratory air and all fume hood exhaust through the same duct system.

Special exhaust systems for fume hood exhausts that cannot be combined with the general laboratory exhaust, such as exhaust from perchloric acid fume hoods and radioisotope hoods, and so on, need to be identified early in the design process and incorporated into the design. Dedicated exhaust systems should be provided for those applications.

The HVAC designer is required to get approval from the NIH Division of Safety or the designated safety officer regarding exhaust compatibility to avoid cross-contamination upon system failure or equipment damage due to an incompatible mixture.

Exhaust air from laboratory equipment such as fume hoods and biosafety cabinets connected to a general central laboratory exhaust main is preferably controlled through pressure-independent terminal units. Exhaust fan systems used for fume hood exhaust from laboratories or specifically for dedicated fume hood exhaust shall be designed, selected, located, and maintained in full accordance with ASHRAE recommendations and SMACNA and NFPA standards. The exhaust fan system's flow and pressure should be monitored by device and connected to the building automation system or otherwise to a visual alarm to alert Building Maintenance Office personnel upon loss of flow or pressure in the system. The alarm system should also indicate failure of any single fan in the system.

If filters or scrubbers are required, they should be located as close to the source of contamination as possible while maintaining ready access for installation, monitoring, and maintenance. **Smoke or fire dampers shall NOT be installed in laboratory exhaust ducts serving fume hoods, biosafety cabinets, or other hazardous exhaust.**

Supply fans should be energized after exhaust fans are operational and exhaust flow is confirmed. Fire detection and alarm systems should not be interlocked to automatically shut down laboratory hood exhaust fans except as formatted by NFPA Standard 45.

No positive pressurized segment of any laboratory exhaust system should be located in any occupied zones. Offices within the mechanical rooms are classified as occupied zones. The design should permit the installation of exhaust fans at the end of the exhaust line and as close as possible to the final point of discharge to avoid or minimize leakage to the space, particularly mechanical areas. The positive-pressure segment of exhaust system shall be constructed per SMACNA standard for 1 494 Pa positive pressure. A leak test shall be performed to verify the SMACNA-allowable leakage rate, as defined in the *HVAC Duct Construction Standard*, latest edition.

Fume hood exhaust ductwork and exhaust fans should be coated with a protective, corrosion-resistant coating or constructed of corrosion-resistant material, such as

stainless steel or an epoxy phenolic coating, e.g., Plastite, Heresite, Keysite, or vinyl selected for resistance to the anticipated exposures. Galvanized steel duct in accordance with the *International Mechanical Code* may be allowed on approval from the Project Officer if it is established that there will be no corrosive chemical fumes present in duct exhaust.

Exhaust stacks should be located at the highest part of the facility and positioned to prevent reentrainment of fumes at intake points. Exhaust discharge must be at least 3 m above the adjacent roofline and located to prevent reentrainment into outdoor air intakes. Discharge of laboratory exhaust must be vertical with exhaust velocity of 18.3 to 20.3 m/s at the point of discharge. Reentry calculations shall dictate the specific exit velocity.

Vertical exhaust shafts should be combined in a plenum at the roof and exhausted with redundant exhaust fans in order to provide system reliability and to provide the ability to service one exhauster without system shutdown. Each exhaust fan should discharge separately above the roofline. Fan discharges should not be combined.

Fume hood air requirements will vary depending on the selected manufacturer's requirement. Minimum face velocity of constant volume fume hood is 0.51 m/s across the opening of the fume hood at sash opened to 45-55 cm.

F.11.16 Animal Research Facility Exhaust System: Exhaust systems employed in animal research facilities are similar in use and function to those in laboratory buildings. General system requirements are identical. The system shall exhaust all hoods and animal research facilities air through a common manifolded system. Systems should be redundant, flexible, and reliable.

Exhaust air in general does not require filtration or scrubbing. However, exhaust as it leaves the animal rooms shall be filtered with a rough filter to capture hair and dander. A filter frame at low air exhaust that can hold a rough filter should be provided from animal housing rooms. In special cases involving infectious animals, a HEPA filter should be considered for use as directed by the NIH Division of Safety. These components should be designed and selected for durability and easy maintenance and replacement of filters.

Some special spaces in the animal research facility, such as BSL-3 treatment rooms or holding rooms, may require special filtration. Requirements for these special

facilities must be determined with the users and the NIH Division of Safety on a specific-project basis.

Exhaust grilles should be located away from supply air diffusers in a manner that creates a uniform, low-velocity airflow across animal cages. Points of connections to the animal research facility exhaust system may be required for snorkels utilized to exhaust ventilated racks. The animal research facility exhaust system shall have a maximum air velocity of 7.5 m/s in exhaust ducts. The animal research facility exhaust system must be tied to emergency power so that ventilation continues in the event of a power failure.

F.11.17 Special Exhaust Systems: The special exhaust systems include dedicated exhaust systems for ethylene oxide (EtO) sterilizer, isolation rooms, autopsy suites, radioactive fume hoods, BSL-3 and BSL-4 facilities, and other miscellaneous functions as designated by the NIH safety officer. Each system has its unique set of requirements for air quantity, filtration, construction materials, type of discharge, controls, emergency power, hours of operation, and so on.

In general, each special exhaust system should have its own dedicated set of main and standby exhaust fan and ductwork not connected to any other exhaust system. To be in compliance with NFPA Standard 90A, exhaust ducts from the special exhaust systems should not be located in the same shaft carrying environmental supply and/or return air ducts.

A dedicated exhaust system should ventilate EtO sterilizer equipment, mechanical chase, battery-charging areas, floor drains, aeration units, and cylinder storage areas. The exhaust system should be separate from the general exhaust systems serving sterile processing areas. The exhaust systems should operate 24 hours per day and maintain negative pressure in the areas housing EtO equipment even when the supply air unit shuts down during unoccupied hours, weekends, and holidays.

- The discharge air from the exhaust fans should be released at the highest point above the building, and care should be taken to ensure that the discharge air does not short-circuit and find a way into the intake of any AHU.
- The systems should be on standby emergency power.

The specific exhaust air intake locations listed above have different static pressure drops at the inlet. This information should be coordinated with the equipment

manufacturer, and pressure-independent constant-volume terminal units in each branch duct, as required, should balance the system

A dedicated exhaust system for isolation rooms should be capable of producing either a room negative pressure (normal isolation) or a room positive pressure (reverse isolation). A selector switch with an indicator should accomplish this mode. The isolation suite should have a dedicated exhaust system composed of a roof-mounted exhaust fan, bag-in/bag-out HEPA filter, and pressure-independent constant-volume terminal units and balancing devices. The system must be on standby emergency power.

The A/E should use data, formulas, and other design information as published by ASHRAE, ANSI, and other sources in designing the exhaust stack height and velocity characteristics to overcome the building cavity boundary and avoid reentrainment of exhaust into outdoor air intakes or adjacent buildings. Stacks should be shown as part of the architectural design and the design rationale described in the early design submittal. In general, exhaust stacks should:

- Be in a vertical direction at a minimum of 3 m above the adjacent roofline and so located with respect to openings and air intakes to avoid reentry of contaminants.
- Have a discharge velocity of at least 20.3 m/s.
- Be designed so that aesthetic considerations concerning external appearance are not allowed to overcome the above requirements.
- Concur in location and height with air dispersion modeling by the NIH Special Project Office.
- Exhaust so that discharge from individual fans are not combined but ducted independently through the roof.

A dedicated exhaust system for the autopsy/pathology suite should have the following specific features:

- The exhaust fan should be located at or near the roof with the fan discharging above the highest point of the building.
- A HEPA filter should be installed in the exhaust airstream near the source of contamination, where possible, to minimize contamination of ducts. For a short-run duct system a filter may be installed at or near the exhaust fan. Redundant bag-in/bag-out HEPA filter banks with isolation dampers shall accommodate maintenance of filters.

- A pressure-independent, constant-volume terminal unit should be provided in the exhaust airstream to maintain constant airflow with the varying system resistance.
- Two wall-mounted exhaust registers should be installed, one on each side of the sink and one above the top of the dissecting tables.
- Ceiling exhaust air registers should be located in the gross specimen storage room above the sink counter area to exhaust chemical fumes.
- Room air near each autopsy table should be exhausted by placing two wall registers approximately 175 mm above the finished floor.
- Approximately 24 L/s should be exhausted from the cold room (mortuary refrigerator) when the room light is on. An interlock of the exhaust damper with the cold room door switch shall be provided.

F.11.18 Machine Room Conditioning: Rooms covered by these guidelines include mechanical, electrical, elevator machine, boiler, autoclave, and cagewash equipment spaces. These spaces are typically not air-conditioned, but they are heated and ventilated to acceptable levels. Reasonable conditions must be maintained in these rooms for worker comfort, to increase equipment life, and to avoid excessive heat gains and losses to adjacent occupied areas.

Heating for equipment spaces generally consists of steam or hot water unit heaters sized to heat the space to 21 °C. Heaters should be strategically located so they can offset infiltration loads caused by leakage through louvers, ventilation rollup access doors, and so on. Isolated pipes within machine rooms do freeze and break during severe weather conditions and when other systems fail.

All machine rooms should be ventilated, as a minimum, to code requirements for maintaining acceptable IAQ. Virtually all rooms that house machinery will have internal heat gains that drive ventilation air quantities far above code minimums. Heat gains are generated by motors, transformers, heat exchangers, piping, tanks and vessels, dimmer banks, speed drives, and so on. The project engineer should itemize operating equipment and establish estimated heat gains for each space. Radiated heat gains from transformers, steam, and heating systems can be as much as 2 percent of demand loads. The ventilation systems should be sized using a 12 °C rise above ambient outdoor air conditions. This results in equipment rooms being as high as 40 °C in peak summer months.

Secondary switchgear rooms should have HVAC equipment to maintain 24-hour temperature between 18 and 26 °C and humidity maintained at 30 to 60 percent non-condensing to protect switchgear and electronic controls. Temperature and humidity sensors should be installed in switchgear/transformer rooms connected to the Supervisory Control and Data Acquisition (SCADA) system. An alarm printer in the high-voltage shop should be programmed to print high- and low-temperature alarms as well as dew-point alarms. This will allow shop personnel to respond to impending problems prior to damping temperatures and moisture.

For large equipment areas with significant air requirements, multiple fans are recommended so that ventilation can be staged by thermostatic control. When combustion equipment exists within a machine room, the ventilation requirements should be combined with combustion air load and the space maintained at a positive pressure. Combustion equipment requires forced ventilation whenever operating; therefore, freeze protection becomes a more critical issue in winter months. Combustion air is best handled using a heating and ventilating unit to temper the air before distributing to this type of room.

Elevator machine rooms, telecommunication closets, fire alarm rooms, and other similar spaces with electronic equipment may require air conditioning instead of ambient ventilation. The project engineer should define criteria for these spaces and design accordingly. Many times these rooms require air conditioning when building systems are off, thereby justifying the use of packaged spot coolers or fan coil units.

The *National Elevator Code* has specific requirements for ventilating elevator shafts and machine rooms that must be applied to NIH buildings. It is desirable to filter makeup air for ventilation of all machine rooms, but this becomes impractical because of large air quantities in many cases. Electrical room ventilation should always be filtered with efficiencies of 30 percent based on ASHRAE's Standard 52, atmospheric dust-spot test efficiency. **The *National Electrical Code* and *National Elevator Code* strictly prohibit the installation of mechanical systems in those rooms unless they serve the space.** When locating heating equipment and routing piping within these areas, care should be taken to minimize the length of run and not to run over electrical equipment.

F.11.19 Emergency Generators: These guidelines serve as the basic criteria for the application of emergency power generators in NIH buildings. Virtually all buildings on the NIH campus use emergency power to back up life safety systems and supply

critical equipment and spaces with power in the event of a normal power outage. Generator installations create numerous problems for the mechanical engineer that must be resolved in the early design stages. Requirements to be considered for installation are as follows:

- A location that is easily accessible for service and future replacement
- A mounting method to avoid structure-borne vibration
- An engine exhaust discharge location
- An engine-cooling system
- Ambient ventilation
- A fuel supply system

The following list of standards, issued by the NFPA, pertains to the installation and operation of generator sets. Installation standards and codes are subject to change and may vary by location or over time. The mechanical engineer has the responsibility for following all applicable local, State, and national codes and regulations.

- NFPA 30, Flammable and Combustible Liquids Code
- NFPA 37, Combustion Engines and Gas Turbines
- NFPA 54, National Fuel Gas Code
- NFPA 58, Liquefied Petroleum Gas Code
- NFPA 59A, Production, Storage, and Handling of Liquefied Natural Gas
- NFPA 70, National Electrical Code
- NFPA 99, Health Care Facilities
- NFPA 101, Life Safety Code
- NFPA 110, Emergency and Standby Power Systems

The generator location is determined mainly by related systems such as ventilation, wiring, fuel, and exhaust. The location should be away from high ambient temperatures and protect the generator set from adverse weather conditions and vandalism. The generator set should be close to the main power-consuming equipment.

The generator room must be large enough to include space for accessories such as batteries, control switchgear, transfer switches, and day tanks. Adequate access to the generator set for service and repair should be planned. At least 1.2 m of

clearance should be provided around the generator set. There should be access for replacing the generator without moving the generator set or accessories, such as a day tank.

The location must be such that adequate ventilation can be provided to supply combustion air and remove heat dissipated by the engine, generator, accessories, and radiators. The location must allow the exhaust system to be routed to the outside. The exhaust system must be terminated at a location where engine exhaust will disperse away from buildings and building air intakes.

Generator sets located outside buildings must be protected from the weather. Integral weather protective housing is available for many models. When locating a set outside, the A/E should consider the risk of power disruption by wind, ice, snow, flooding, lightning, fire, and vandals.

The generator set should be located where engine, fan, and exhaust noise levels will be acceptable.

F.11.19.1 Exhaust System: The purpose of the exhaust system is to direct engine exhaust away from the engine and allow it to discharge into the atmosphere. A muffler should be connected into the exhaust system, either inside or outside the generator set enclosure. For maximum efficiency, and to prevent engine damage, the exhaust system should not create excessive backpressure on the engine. The correct pipe size, connections, and muffler should be selected to achieve proper operation of the generator. When exhaust piping runs through a floor, ceiling, attic, or concealed spaces, the exhaust pipes should be installed within a metal, masonry, or other approved chimney. The generator set exhaust system shall not be connected to an exhaust system serving other equipment. Soot, corrosive condensate, and high exhaust-gas temperatures will damage idle equipment served by a common exhaust system.

Generator sets that are installed outside a building with integral weather protective housing should have a mounted critical-grade muffler. The generator set should be located so engine exhaust will disperse away from buildings and building air intake and will not blacken walls and windows with soot. Every precaution must be taken to prevent excessive backpressure on the engine. Exhaust piping must comply with the following general safety precautions:

- Exhaust pipes should be steel and be strong enough to withstand the service. Schedule 40 black iron pipe is recommended.
- Exhaust pipes must be freestanding, not supported by the engine or muffler.
- Exhaust pipes must use vibration-proof flexible connector.
- Exhaust pipes must have a clearance to meet local and national codes for combustible materials and terminate outside the building.
- Exhaust pipes must be guarded to prevent contact with personnel, or severe burns could result.
- Exhaust pipes must be routed to avoid fire detection devices and automatic sprinkler alarm heads.
- Exhaust pipes must be vented to the atmosphere away from building doors, windows, and ventilation intake vents.
- Exhaust pipe routing and size must be designed to limit backpressure on the engine to within manufacturer's tolerances.
- Exhaust pipes must be pitched downward and away from the generator set in a horizontal run or a condensate trap with a drain with hose connection, installed where a rise in the exhaust system begins.
- A flexible, corrugated stainless steel exhaust tube must be connected to the engine exhaust outlet to take up thermal expansion and generator set movement and vibration.

The mechanical engineer should select a muffler that will reduce the exhaust noise to an acceptable level. Three types of muffler are commercially available for the following applications:

- Industrial Muffler: suitable for industrial areas or remote installation where attenuation is not critical, 12 to 18 dB (A) sound reduction.
- Residential Muffler: suitable where some low background noise is always present, 18 to 25 dB (A) sound reduction.
- Critical Muffler: suitable for the areas of hospitals or residential dwellings or where background noise is minimal, 25 to 35 dB (A) sound reduction.

Residential or critical-grade mufflers are commonly used at the NIH depending on the location of the generator. The muffler should be installed as close as possible to the engine. Cool mufflers collect undesirable carbon residues and moisture. Draining and servicing the muffler are usually more convenient if it is installed near the

engine. The muffler and exhaust piping should be insulated to prevent burns if accidental contact occurs and to reduce heat gains to adjacent spaces.

F.11.19.2 Engine Cooling: Liquid-cooled engines use a coolant that is pumped through passages in the engine cylinder block and heads, and sometimes through water jackets around the exhaust manifold. The coolant is pumped under pressure throughout the system. As the coolant moves through the engine, it absorbs heat from the engine. The coolant is then cooled by either a radiator or a liquid-to-liquid heat exchanger. The coolant consists of a solution of water and antifreeze suitable for the coldest ambient temperature expected.

Mechanical engineers may consider various methods of heat rejection including the use of factory-mounted radiators, factory-mounted heat exchangers, and remote cooling methods using various sources. The simplest method consisting of the factory-mounted radiator is the preferred choice of the NIH because it reduces maintenance and comes packaged with the generator.

Mounted radiators are installed on the bases of the generator set in front of the engine. A radiator-cooling fan draws air over the engine and pushes it through the radiator. This action provides surface cooling of the engine together with cooling of the engine coolant in the radiator. This method of cooling is independent of interruptible utility-supplied cooling water.

F.11.19.3 Ambient Ventilation: A room ventilation system is necessary to remove the heat and fumes dissipated by the engine, generator, accessories, and other equipment in the generator room. The system is also required to provide an adequate supply of clean combustion air. Ventilation system sizing should be based on the required air intake, maximum allowable total pressure drop, and type of engine-cooling system employed. Air-inlet capacity must be sized to handle the combined flow of combustion and ventilation air.

Normally, there is an air inlet and discharge outlet in the room for circulation. Arrangement of these vents is such that air cannot escape without first passing through the immediate area of the generator set. Locating the outlet higher than the inlet allows for convection air-current flow. Ventilating air inlet and discharge openings must be located or shielded to minimize fan noise and the effects of wind on airflow. If louvers or screens inhibit free airflow, the vent areas should be increased by 25 to 50 percent.

Dampers or louvers protect the generator set and equipment room from the outside environment. Their operation of opening and closing should be controlled by the operation of the generator set(s). Dampers must be open when the set is running. Thermostatic shutters can be used to control airflow to maintain a desirable temperature range. They regulate airflow during operation and close at shutdown. Closing at shutdown is especially important in cold climates. Natural draining of cold air into the outlet duct can lower the ambient temperature below a safe level for all engines, especially diesels. In cooler climates, a movable or thermostatically controlled discharge damper can be used. This will recirculate radiator discharge air to keep the room warm when the generator set is operating.

The engine-driven fan set draws air forward over the generator and pushes it through the radiator. The radiator shroud has flanges for connecting a duct to carry the air to the outdoors. A flexible duct connector must be provided at the radiator to take up generator set movement and vibration.

Airflow through the radiator is usually sufficient for generator room ventilation. Auxiliary ventilation may be necessary if a low room air temperature rise has to be maintained. It is recommended that a maximum 12 °C room temperature rise be utilized in designing the ventilation air system. Certain generators may tolerate ambient conditions above 41 °C, but the maximum temperature should be limited to improve performance and generator reliability.

F.12 Fuel Supply

For continuous safe and satisfactory operation of emergency generators, an un-interrupted fuel supply system must be engineered and installed to industry standards. Generators may use either a liquid fuel or gaseous fuel source as justified by life-cycle costing. Liquid-fuel supply tank construction, location, installation, venting, piping, testing, and inspection must comply with applicable codes and NFPA Standards 30 and 37.

The supply tank must hold enough fuel to run the generator for the prescribed number of hours (NFPA 110 Class designation) without refueling. Tank-sizing calculations should be based on the hourly fuel consumption at full load. Other considerations for tank sizing include the duration of expected power outages versus the availability of fuel deliveries and the shelf life of the fuel. The shelf life for diesel fuel is 1.5 to 2 years.

For emergency power systems, codes might not permit the fuel to be used for any other purpose, or may specify a draw-down level for other equipment that guarantees the fuel supply for emergency power use. It is the NIH's policy not to permit the generator fuel supply to be used for any other purpose.

For multiple-generator set installations, each set or its day tank should be connected independently to the fuel supply tank. This will prevent any set from starving for fuel when all sets are operating and prevent entrainment of air into the fuel system of idle sets.

Fuel tanks must be installed in accordance with code restrictions. The fuel tank should be as close as possible to the generator set. Because the fuel pump influences the fuel tank location, the fuel pump lift capability should be considered. If the sum of fuel pressure drop and vertical lift exceeds the lift capabilities of the standard fuel pump, the use of an auxiliary fuel pump and day tank is required.

Federal, State, and local codes have extensive requirements covering tanks and fuel piping installation. The A/E should carefully consider tank specialties, levelometer alarm and monitoring devices, and testing requirements.

When burying fuel lines, compatible metal fuel lines and fittings should be used to avoid electrolysis. Black steel pipe should be used for diesel fuel lines. Underground piping should be installed to protect it from contact with the building structure and include a leak detection and monitoring system.

A flexible section of code-approved tubing should be used between the engine and fuel supply line to withstand generator set vibration. Diesel-fueled generator sets require a fuel return line. All fuel line and tank fittings must be properly located and airtight to keep air from getting into the fuel lines. Fuel supply pipes and pumps must be sized to handle a flow rate three times greater than the full-load fuel consumption rate specified by the generator manufacturer. Fuel return pipes may be sized for twice the flow.

Elbows, bends, and long lateral distances in the fuel line reduce lifting capabilities. Note that in the descriptions of the various fuel systems using auxiliary fuel pumps, the vertical lift is limited by the capability of the transfer pump. With a large-capacity fuel pump, the vertical distance must not exceed 12 m lift. Fuel lifted long heights

causes a pressure drop to the point where the fuel boils, produces a vapor, and causes vapor lock.

An electric solenoid shutoff valve in the supply line is always desirable and required for indoor automatic or remote starting installations. The solenoid wires are connected to the battery ignition circuit so the valve will open during operation.

Day tanks should be as close as practical to the generator set to provide direct fuel connections, at an elevation where the highest fuel level in the tank is lower than the diesel fuel injectors. Day tanks are fuel transfer tanks that are used when the standard engine fuel pump does not have the capacity to draw the fuel from the supply tank, or the supply tank is overhead and presents problems of high fuel-head pressure for the fuel return. The day tank is vented to the outside when installed indoors.

Diesel engine return-fuel should be piped to the supply tank rather than the day tank. Otherwise, the influx of warm return fuel will increase the day tank fuel temperature. As fuel temperature increases, fuel density and, consequently, engine power decrease. Return fuel should be piped to an intermediate day tank with float switch to pump fuel from there to the supply tank.

Gaseous-fuel supply system installations, operation, and maintenance must comply with all applicable codes and NFPA Standards 37, 54, and 58. For emergency power systems where the risk of interruption of offsite fuel supplies is high, codes might require an alternate onsite fuel supply and provisions for automatic transfer to the alternate fuel.

F.12.1 Types of Gaseous Fuels: The selection of a particular fuel depends on (1) availability, (2) efficiency required, (3) engine application (mobile or stationary), (4) initial cost, and (5) cost of operation.

F.12.1.1 Natural Gas: Natural gas is composed primarily of methane and varying amounts of other dry gases with a heat content of about 37.25 MJ/m^3. It is piped from the source to points of consumption. Localities that are not serviced by natural gas will frequently have a manufactured gas system.

F.12.1.2 Manufactured Gas: Manufactured gas is not a particularly good fuel for generator sets if efficiency is important. Manufactured gas has a low heat value, and

the engine will have to be de-rated as much as 50 percent. While gas manufacturing cost is usually higher than for other types of fuels, there are fewer storage problems and ambient temperatures have no effect on supplies.

F.12.1.3 LP: LP is a commercial mixture of propane and butane. The ratio between the two varies with local temperatures and user requirements. While propane vaporizes at a lower temperature than butane, butane has a higher heat content. Stored and transported under pressure in tanks, LP is a vapor at room temperature. By increasing pressure or lowering temperature, it remains in a liquid state. Liquid and vapor LP are both used as a fuel for generator sets.

F.12.2 Temperature and Pressure: Temperature and pressure are interdependent. If gas temperature is changed, the pressure will change proportionally. Gas at room temperature can be changed to a liquid by compressing and storing it in a closed container.

A liquid at atmospheric pressure can be changed to a gas by raising the temperature to the liquid's boiling point. Vaporizing LP builds pressure within the container.

The fuel system components must operate at various working pressures depending on the kind of gas/vapor, size and length of fuel lines, number of generator sets supplied, ambient temperature, and so on. Components must have the strength to function properly under the anticipated or calculated maximum working pressures. LP tanks, for example, must have a minimum design pressure of 1 724 kPa per NFPA Standard 58.

F.13 Steam Systems

The steam requirements for NIH facilities are extensive and include autoclaves, cagewash equipment, kitchen equipment, HVAC systems, domestic water heating, and so on. Steam is generated at the NIH Central Heating Plant in Building 11 and distributed at a pressure of 1 138 kPa. Condensate is returned to Building 11 through a series of low-pressure pump return mains and high-pressure drip condensate piping.

Central plant steam is commonly used for most applications at the NIH. Clean steam produced from RO water or by double distillation should be used for humidification to special animal housing areas in animal research facilities, transgenic animal housing

areas, special patient holding areas (bone marrow transplant etc.), autoclaves, and so on.

The type and method of steam/condensate distribution to NIH buildings should be thoroughly evaluated with life-cycle costing. The use of service tunnels, pipe trenches, and direct burial should be considered, and insulation alternatives should be optimized for energy savings. Where possible, all steam condensate should be collected and returned to the plant. Flash tanks should be utilized to reduce pressure, and the resultant flash steam utilized for low-pressure supply where a continuous demand exists. When the resultant flash steam has no established use, it should be vented to the atmosphere.

Steam and condensate distribution systems should be sized conservatively with minimal line pressure loss at maximum design load plus allowances for warmup and future growth. All valves, traps, equipment, and specialties should be selected and sized for their intended use by the project engineer. Sizing considerations should include warmup factors and estimated inlet and outlet pressure.

The room in which pressure-reducing valve (PRV) stations, condensate pumps, converters, and so on are located should be of suitable size to permit safe access for maintenance of equipment and safe, easy egress during emergencies. Main steam isolation valves should be automatic with manual bypass and located close to points of egress from mechanical rooms so that, in the event of a system failure, valves can be easily accessible for operation. Pump motor starters should be clearly identified and, where practical, shall be mounted on a common panel. If a duplex condensate pump is installed in the pit, the starter, disconnect switch, and alternator are to be located above the pit where easily accessible. Locating any serviceable equipment in a confined space should be avoided where possible.

Steam service rooms have excessive radiated heat gains from piping, valves, and receivers. All such equipment should be insulated to the fullest extent possible. Ventilation systems should maintain the room at 12 °C above ambient conditions or 40 °C.

The ASHRAE *Handbook for HVAC Systems and Equipment* and the ASME Code contain specific criteria for the design and installation of steam systems and should be utilized for NIH buildings, for which steam systems and distribution piping are classified as follows:

- Low-pressure steam: 97 kPa and below
- Medium-pressure steam: 103 kPa through 552 kPa
- High-pressure steam: 558 kPa and above

It is not uncommon in NIH buildings to have two medium-pressure steam systems (276 kPa and 552 kPa).

Steam should be supplied to the inlet of equipment steam control valves at the pressure indicated below:

- Radiators: 34 kPa maximum
- Convectors: 34 kPa maximum
- Air heating coils: 97 kPa maximum (higher pressures may be used if justified by engineering or economic considerations)
- Unit heaters: 207 kPa maximum
- Domestic hot water heaters: 552 kPa maximum
- Central humidifiers: 97 kPa maximum
- Terminal humidifiers: 97 kPa (duct mounted)
- Dietetic equipment: as specified by supplier
- Sterilizers and washers: as specified by supplier
- Heating water convectors: 552 kPa maximum

It should be noted that radiators, convectors, air-heating coils, and unit heaters are generally supplied with heating water in lieu of steam.

F.13.1 PRV Station: PRVs should be provided at the building steam service entrance or closest to user, as required to support building steam utilization. Two or three stations may be required and typically have the following reduction stages:

- High to medium: 1 138 kPa to 552 kPa
- Medium to medium: 552 kPa to 276 kPa
- Medium to low: 552 kPa to 97 kPa

Secondary or remote PRVs installed within the building are not desirable. Second-stage PRVs may be installed in mechanical penthouses or other easily accessible mechanical spaces. Small PRVs that serve isolated equipment such as glass washers with different pressure requirements may be installed close to that

equipment in a service corridor or other suitable space. In no case should high-pressure steam be reduced in a single stage to either 276 kPa or 97 kPa.

PRV stations should be sized for the calculated peak demand of building heating, domestic hot water, humidification, and process equipment load. For process equipment load, use 100 percent steam consumption of the largest single user plus 25 percent steam consumption of all other users. Station sizing shall include provisions for future growth.

Where a single PRV would exceed 75 mm in size or the turndown ratio (maximum load/minimum load) is greater than 254 mm, two PRVs should be provided in parallel, one for approximately 0 to 33 percent for low-load conditions and one for 33 to 100 percent for high-load conditions, with a single full pipe size bypass. For large PRVs where valve sizes are exceeding 150 mm, three PRVs should be provided in parallel, one for approximately 0 to 33 percent for low-load and two for 33 to 100 percent for high-load conditions with a single bypass.

Where the steam service includes capacity for future expansion, all PRV station pipe and components except the PRVs should be sized for the future. The PRVs should be sized for the present load. Install eccentric reducers before PRV and a concentric reducer after the valve so condensate does not collect at the bottom of the reducer.

All PRV valves should be selected, and both the required load and the maximum capacity (for safety valve sizing) should be scheduled for that valve.

The PRV bypass valve and the safety valve should be sized according to the *National Board Inspection Code* of the National Board of Boiler and Pressure Vessel Inspectors (Columbus, Ohio). The safety valve should be sized to handle the maximum flow of the largest PRV or the bypass. The bypass valve capacity must not exceed the capacity of the safety valve. Bypass valves should have two isolation valves, the first valve to secure steam and the second to modulate pressure.

PRV stations and headers should be fabricated using fully welded fittings; flanged base plates are not acceptable. The high-pressure main should have a single shutoff valve capable of securing all steam to the building. Each branch of the PRV station shall have a single shutoff valve capable of securing steam without approaching the station.

PRV stations must be isolated from the structure to limit structure-borne noise. The maximum valve NC level should not exceed that specified at all anticipated loads. A noise suppressor should be provided as required. PRVs should be fitted with custom fabric insulation jackets to further reduce noises and heat gain to the space.

Steam valve pilot lines must be sloped down to tie into mains and must be contained within isolation shutoff valves. Pilot lines should be at least 15 mm to prevent clogging.

F.13.2 Condensate Return Units: Condensate receivers should serve only low-pressure mains and the discharge from flash tanks. Receivers should not be used as flash tanks or have high- or medium-pressure condensate directly piped, regardless of capacity. Condensate return units may be duplex electric, steam, or compressed-air powered. Electric pumps should be centrifugal, 26 rad/s maximum with Viton seals and stainless steel shafts. Each pump should have isolation valves on both the inlet and discharge lines to accommodate service.

Each condensate return unit should be piped with a full-size bypass line to drain. The bypass serves as emergency manual drainage for condensate if the return unit is off line. The bypass should be indirectly piped to the sanitary system and have a cooling trap to temper condensate down to a suitable temperature prior to discharge. All condensate receivers should be vented outdoors and independent of steam relief vents. Condensate return units should have fully packaged controls, starters, disconnects, and high-level alarms tied to the building automation system.

F.13.3 Steam Traps: Steam traps should be sized for their particular application. The safety factor to use in the selection will depend on the accuracy of the estimated load, estimated pressure at trap, and estimated backpressure. Safety factors based on type of trap and application of trap should be as follows in Tables F.13.3.a and F.13.3.b.

Table F.13.3.a Safety Factors for Steam Traps

Type of Steam Trap	Safety Factor
Balanced-pressure thermostatic traps	2-4
Thermostatic traps	1.5-2.5
Liquid expansion traps	2-4

Type of Steam Trap	Safety Factor
Bimetallic traps	2-3
Float and thermostatic traps	1.5-2.5
Inverted bucket traps	2-3
Thermodynamic traps	1.2-2

Table F.13.3.b Steam Trap Safety Factor

Application	General	With Temperature Control
Mains, drainage	x2	-----
Storage heaters	x2	-----
Unit heaters	x2	x3
Air-heating coils	x2	x4
Submerged coils (low-level drain)	x2	-----
Submerged coils (siphon drain)	x3	-----
Rotating cylinders	x3	-----
Tracing lines	x2	-----
Platen presses	x2	-----

Rule of Thumb: Use a factor of 2 on everything except temperature-controlled air-heater coils, converters, and siphon applications.

F.13.3.1 Steam Trap Applications: Numerous types of steam traps are available, and each may serve a multitude of applications. Table F.13.3.1 lists various trapping applications and provides first and second recommendations for each case.

Table F.13.3.1 Recommendations for Steam Trap Applications

Application	Float/Thermostatic	Float/Thermostatic With Steam Lock Release	Float/Steam Lock Release	Thermodynamic	Balanced Pressure Thermostatic	Bimetallic	Liquid Expansion	Inverted Bucket
Canteen Equipment								
Boiling pans, fixed	A	B	B1	B1	B			
Boiling pans, tilting		A	B		B			
Boiling pans, pedestal	B	B	B1		A2			
Steaming ovens					A2			
Hot plates	B	B	B1		A2			
Fuel Oil Heating								
Bulk oil storage tanks				A				B1
Line heaters	A							B1
Outflow heaters	A							B1
Tracer lines and jacketed pipes				B	A3	B	B	
Hospital Equipment								
Autoclaves and sterilizers	B	B	B1		A			
Space Heating Equipment								
Shell and tube heat exchangers	A	B	B1					B1
Heating coils and unit heaters	A	B	B1					B1
Radiant panels and strips	A	B	B1	B1				B1
Radiators and convection cabinet heaters	B				A	B		
Overhead pipe coils	B				A			B

Application	Float/Thermostatic	Float/Thermostatic With Steam Lock Release	Float/Steam Lock Release	Thermodynamic	Balanced Pressure Thermostatic	Bimetallic	Liquid Expansion	Inverted Bucket
Steam Mains								
Horizontal runs	B			A	B2			B
Separators	A			B	B2			B
Terminal ends	B			A1	B2			B1
Shutdown drain (frost protection)					B3		A	

A = first choice for application
B = second choice for application
Refer to notes below for 1,2,3 suffix.

Notes:
1. Apply trap with air vent in parallel.
2. Install at end of cooling leg; minimum length, 0.91 m.
3. Use special tracing traps that offer fixed-temperature discharge option.

Reference: Steam trap data were taken from Spirax Sarco Application and Hook-up Data.

F.13.4 Piping Systems (Aboveground Steam and Condensate): Piping should be designated and installed to allow for expansion and contraction without creating excessive stresses and strain in the system. Expansion loops, offsets, and bonds should be provided as shown on contract documents and wherever possible. Expansion joints should be provided as a last resort. Pipe anchors should be designed for each location and sized to handle all forces with conservative safety factors. All anchors, guide loops, and joints must be readily accessible for maintenance and inspection.

Regardless of steam and condensate pressure classification, all pipe and fittings should be rated for minimum 136 kg at the NIH. Steam piping shall be a minimum Schedule 40 and condensate piping a minimum Schedule 80. Steam connections to

equipment 50 mm and larger must be flanged and threaded for sizes 40 mm and smaller. Flange gaskets and bolts should be suitable for operating pressures and temperatures of the system. Hardware should be selected so that temperature and pressure fluctuations in the system and expansion/contraction do not affect performance over time.

Steam mains should be drip-trapped to accommodate condensate drainage at all locations. Drip connections should be provided at the base of each low point in mains and just before all equipment connections.

Condensate piping must be gravity drained after steam-consuming devices such as coils, heaters, sterilizers, and so on. There should be a hydraulic head between the trap and coil of 450 mm minimum to ensure drainage. Where the hydraulic head is not achievable, condensate pumps must be utilized. Under no circumstances should condensate be lifted after a modulating device, and condensate must drain freely by gravity.

High-pressure drip lines on steam distribution mains should be routed to individual buildings and not connected to pumped return lines to plant. High-pressure and medium-pressure condensate should be piped independently to an individual building's flash tanks before connection to the condensate receiver. Flash tanks should be factory fabricated and ASME stamped and approved. Contractor shop-fabricated tanks are not acceptable.

A float and thermostatic (F&T) trap with leak sensor and check valve is the choice of preference at the NIH for low-pressure equipment. Traps must be sized for present load with a warmup factor. Condensate should not be lifted downstream of float traps. Trap bypass valves should not be installed; if redundancy is required or capacity dictates, dual traps should be installed. On approval from the NIH, thermodynamic steam traps for constant loads and F&T traps for intermittent loads may be used as required for the application to design the system.

All steam relief valves should be piped individually and discharged 2 100 mm above the building roof. Care should be taken not to locate discharges close to outdoor air intake or where they could be a hazard to maintenance personnel. Relief valves should not be connected to other steam vents. All valves, drip-pan elbows, and relief lines must meet ASME requirements.

Steam valves and specialties should be of the industrial high-performance type. Positive shutoff and isolation of mains are critical to the safety of maintenance personnel. Stainless steel seats and disk are required. Steam strainers should be positioned horizontally (flat) to prevent condensate from collecting in the bottom of the strainer and reducing its life.

Steam vacuum breakers, not check valves, should be used on coils and heat exchangers to eliminate vacuum. Vacuum breakers should be located external to air-handling unit casing. One-third/two-thirds control valves should be utilized for all heat exchangers and for coils where control is critical or capacity is large. Steam pressure gauges should be liquid filled with a range consistent with operating pressure. Stainless steel ball valves should be used for gauge cocks. Warmup valves 20 to 25 mm in size should be provided on each steam main depending on its size.

Steam to lab process equipment should have a drip leg installed before connection to prevent condensate buildup. Condensate must drain by gravity away from lab process equipment. Steam instrumentation sensors require a 600 mm-long sensing line from header to sensor to protect it from extensive heat.

Steam control valves should be fully proportional with modulating equal percentage plug. Steam valves should be designed to modulate and be sized to meet loads at full and partial loads. All steam control valves should have stainless steel trim and be suitable for the pressure condition and should operate with the differential pressure required. All steam valves shall be a minimum 1 725 kPa. All valve stems on systems to be insulated shall be provided as extended type as required to permit sufficient clearance for proper operation without damaging insulation.

Steam and condensate piping within NIH buildings should be sized for the parameters in Table F.13.4

Table F.13.4 Parameters for Steam and Condensate Piping

Steam Service	Supply Mains and Risers Maximum		Return Mains and Risers Maximum	
	Drop kPa* (%)	Friction Rate (kPa/30 m)	Drop kPa* (%)	Friction Rate (kPa/30 m)
High-pressure system	10	14-55	10	14
Medium-pressure system	5	14	5	7
Low-pressure system	5		5	

* Percentage of supply or return main initial pressure.

F.14 Chilled-Water Systems

Chilled water should be provided from the existing NIH central chilled-water distribution system. The building chilled-water supply design temperature shall be 6 °C. The A/E should select the chilled-water heat transfer terminals to ensure that the interior space relative humidity is maintained at full- and part-load conditions with a leaving chilled-water temperature from the building at 16 °C.

Individual building (tertiary) chilled-water pumps shall be provided including 100 percent standby capacity. The system primary and secondary pumping is provided at the central plant. All terminal HVAC coils and equipment shall be provided with two-way control valves. The use of three-way control valves is prohibited. The selection of the terminal heat transfer equipment shall be made in conjunction with the control valve to maintain 16 °C leaving water temperature at all part-load conditions. Each of the building chilled-water pumps shall be variable speed. The speed of the pumps should be varied from differential pressure across a remote and representative portion of the building's chilled-water system.

Special areas such as operating rooms and computer rooms may have dedicated chilled-water pumps installed with a hydraulic bridge. Dedicated or general-use chilled-water pumps serving critical areas should be provided with emergency power. Turbine or Venturi-type water-flow measuring devices in main chilled-water piping shall be provided.

All valves and accessories should be arranged in a systematic manner in places accessible for maintenance and operation. All valve stems on systems to be insulated shall be provided as extended type as required to permit sufficient clearance for proper operation without damaging insulation. Access doors should be provided for valves in concealed spaces. Crossing of building construction joints with chilled-water pipes should be avoided. Chilled-water piping within buildings should be sized for a maximum velocity of 2.4 m/s and a unitary pressure drop of 1.2 m per 30 m of piping. Chilled-water piping from the distribution system to the building should be sized for a maximum velocity of 0.06 m/s and a unitary pressure drop of 1.2 m per 30 m of piping. For large facilities with floor areas greater than 9 290 gross m^2, consideration shall be given to providing multiple building chilled-water services to the structure.

F.14.1 Secondary Chilled-Water/Process Cooling Water Systems: Secondary chilled-water systems used in NIH buildings serve fan coil units, refrigerant condensers, and other miscellaneous cooling equipment. The operating temperatures of these systems should closely follow that of the central chilled-water so that secondary equipment efficiency is optimized.

Secondary chilled water is most often generated by the central chilled water through plate and frame heat exchangers. Two heat exchangers of 100 percent capacity each must always be provided so that one can be serviced with the system operational. The central chilled-water system is operational year-round but is prone to occasional outages to accommodate maintenance functions and new construction. When the secondary chilled-water system serves critical equipment that must remain in operation continuously, the A/E should consider the use of a supplemental building chiller to back up the central system. Supplemental chillers may be in direct contact with the secondary loop or be connected through three fluid-plate and frame heat exchangers.

F.14.2 Process Cooling Water: Process cooling water systems used in NIH buildings serve equipment or research functions that are not related to the building HVAC systems. These systems may have a highly diverse range of operating temperature and pressures that will eventually force the use of multiple systems. The A/E must define in the early design stages the design criteria for all such systems. The mechanical engineer should be an active participant in programming meetings. Process cooling water may be generated by the central chilled water of a building as condenser water source depending on the required operating temperatures. Plate and frame heat exchangers are commonly used to segregate the systems. Two heat

exchangers of 100 percent capacity each must always be provided so that one can be serviced with the system operational.

Process cooling water systems are extremely critical because of the functions they serve. The system must have two reliable sources to generate the cooling water. When central chilled water is utilized, a supplemental chiller should be employed, and when condenser water is used, domestic water can be the backup. It may also be desirable to connect domestic water to the process side locally adjacent to the equipment for further reliability. Whenever domestic water is employed, it should be measured and charged to the Institutes so it is not arbitrarily wasted. Process equipment such as lasers may have very specific pressure limitations on both the inlet and discharge sides. Local pressure-reducing valves may be required to protect equipment. Other equipment may have extremely high pressure drops and require the use of local booster pumps. It is also not uncommon to have local 20 micron filters adjacent to equipment to improve the quality of cooling water before it enters the equipment.

F.14.3 System Design: The systems may be either constant or variable flow based on the control valve arrangement. Variable flow has proven to be highly effective because of the large diversity of loads and ever-changing pressure requirements. VSDs for each pump should be considered for improved reliability.

Each independent fluid connected to the systems should have its own expansion tank, air separator, and water makeup provisions. Supplemental chillers may operate in winter months and therefore will have propylene glycol automatic fill equipment. **The water quality in those systems is extremely important to reduce maintenance and eliminate fouling in research equipment.** High-efficiency strainers and local water filters should be integrated with the design.

Piping for these systems consists primarily of Type K copper for sizes 100 mm and smaller. Schedule 40 galvanized steel may be used only for sizes 125 mm and larger. Piping should be sized per the following criteria:

- Copper pipe: 1.2 m per 30 m maximum head loss and 1.8 m maximum pipe velocity
- Steel pipe: 1.2 m per 30 m maximum head loss and 2.4 m maximum pipe velocity

Piping for these systems is normally extensive and routed to the remote areas of all buildings. During the schematic design phase, the design engineer should develop a piping concept that reduces long, small-size terminal runs and accommodates easy system balancing to all equipment. Wherever possible, reverse return piping networks should be employed, as they tend to be self-balancing and force flow to the remote ends of the network.

Each piece of equipment should have a means to balance the water flow, determine the water flow, and control the capacity. Large-capacity equipment, over 0.63 L/s, should have pipe-mounted flow meter fittings. Smaller items should have pressure/ temperature plugs on the supply and return mains to accommodate balancing.

Dual primary distribution pumps are always base-mounted, end-suction or split-case, double-suction pumps. Close-coupled pumps are also acceptable on smaller applications. All pumps, coil circulating and distribution, should have the following components to support maintenance operations:

- Isolation valves on suction and discharge lines
- Pipe strainer or suction diffuser with strainer
- Flexible connections on suction and discharge
- Check valve on discharge
- Balancing valve with memory stop on discharge
- Pressure gauges and thermometer on suction and discharge lines
- Pump inertia base and vibration isolation when not installed slab on grade
- Pump speed not exceeding 1 750 rpm
- Discharge control valves where required for pump starting or equipment isolation

F.15 Hydronic Heating Systems

Hydronic heating systems are used for various services in NIH buildings. They may serve preheat coils, reheat coils, perimeter radiation, fan coil units, and domestic water heaters. The building size and design criteria often dictate whether a single system or multiple systems supply all services.

Regardless of the equipment served by the system, most hydronic heating systems have similar components and piping arrangements. A typical system consists of a shell and tube convector, duplex distribution pumps, expansion tank(s), water

makeup provisions, air separator and two- or three-way terminal device control valves.

Hydronic heating systems normally have main and standby components with 100 percent capacity in the event that lead components fail. On large systems, three sets of convertors and pumps can be provided, two to carry the load and one as standby.

Each shell and tube convertor is supplied with either low- or medium-pressure steam and provided with one-third and two-thirds capacity control valves for uniform temperature control. Single control valves may be utilized for low-capacity convectors and where close temperature control is not required. Steam mains must always be dripped adjacent to converter connections to ensure a good-quality steam flow to the convertors. Condensate discharge should be lifted downstream of convertors unless it is pumped. Single condensate traps are normally provided for each converter without bypass piping. Where large convertors are installed, the A/E may design duplex traps of 50 percent capacity each.

The entire hydronic heating system may be provided in a manufactured package depending on its size. Packaged systems are typically skid mounted, pre-piped, and pre-wired. The manufactured package must be of sufficient size to accommodate service of all components and replacement of major parts without shutting off the entire system and should allow easy maintenance and access to all components.

The systems may be either constant or variable flow based on the control valve arrangement and design concept. It is desirable to use a variable-flow concept so that the large diversity often found in hydronic heating systems can permit the downsizing of convertors, pumps, and piping to minimize initial cost. Variable flow is easily obtained using VSDs on large systems and differential pressure control on smaller ones.

Hydronic heating water systems designed specifically for preheat coils should have a minimum 40 percent propylene glycol solution for freezer protection of coils. All outdoor air units should also have duplex coil circulating pumps to provide a continuously uniform heating water flow across the entire coil face areas. Coil circulating pumps may be either in-line or base mounted and located for easy service. In-line pumps may be located overhead provided that safe service platforms

and permanent rigging devices are installed to accommodate replacement of pumps. In-line pumps should not exceed 5 600 W in size.

Hydronic heating water systems should be segregated when different design temperatures are required because of seasonal changes. Those systems that serve reheat coils, perimeter radiation, and fan coil units may have the discharge temperature reset as a function of ambient conditions for improved operating efficiency.

For reheat and miscellaneous heating applications, such as hot water coils (duct mounted, furnished with air terminal unit, fan coil units), unit heaters, radiant panels, cabinet unit heaters, convertors, and so on, one common heating system should be provided. The use of two totally separate and independent heating systems (one for reheat and the other for perimeter terminal units) should be considered only if the use of two systems is proven cost-effective by the life-cycle cost analysis. With a single, common heating system, care should be taken to select the lowest hot water temperature reset schedule to offset the generally constant reheat load of the interior spaces.

Heating elements in building heating systems should be connected in parallel. Where elements are utilized in conjunction with the cooling system supply, controls should be included with provision for adjustable dead band to avoid simultaneous heating and cooling, unless relative humidity control is essential, in which case simultaneous cooling and heating may be considered.

Piping for hydronic systems consists of Type K copper or carbon steel piping with threaded fittings for sizes 50 mm and smaller and Schedule 40 black steel for sizes 65 mm and larger. Heating piping should be sized per the following criteria:

- Copper pipe: 1.2 m per 30 m maximum head loss
- Steel pipe: 1.2 m per 30 m maximum head loss and 2.4 m/s maximum pipe velocity

Piping for heating water systems is normally extensive and routed to the remote areas of all buildings. During the schematic design phase, the project engineer should develop a piping concept that reduces long- and small-sized terminal runs and accommodates easy system balancing to all heating devices. A balancing valve and flow meter should be provided at the main branch from a riser at each floor for

all systems. Wherever possible, reverse return piping networks should be employed, as they tend to be self-balancing and force flow to the remote ends of the network.

Each piece of heating equipment should have a means to balance the water flow, determine the water flow, and control the heat capacity. Large-capacity coils, over 0.63 L/s flow, shall have pipe-mounted flow meter and temperature and pressure fittings. Smaller coils should have pressure/temperature plugs on the supply and return mains to accommodate balancing.

Primary distribution pumps are always base-mounted, end-suction or split-case, double-suction pumps. Close-coupled pumps are not acceptable. All pumps, coil circulating, and distribution should have the following components to support maintenance operations:

- Isolation valves on suction and discharge lines
- Pipe strainer or suction diffuser with strainer
- Flexible connections on suction and discharge
- Check valve on discharge
- Balancing valve with memory stop on discharge
- Pressure gauges and thermometers on suction and discharge lines
- Pump inertia base and vibration isolation when not installed slab on grade
- Pump speed not exceeding 26 rad/s

F.16 Fume Hoods and Biological Safety Cabinets

NIH fume hood and biological safety cabinet specifications should govern the requirements for specific types of hoods and cabinets. The A/E, after thorough review of program requirements, should select hoods on cabinets that will meet the needs of the researcher while optimizing system performance and minimizing energy cost. Current specification sections include the following:

- Section 11810: Fume Hood, Laboratory, Air Bypass Type
- Section 11820: Fume Hood, Laboratory and Horizontal Air Bypass Type
- Section 11830: Fume Hood, Laboratory and Combination Sash Type
- Section 15951: Testing Constant Volume Fume Hoods
- Section 15952: Testing Variable Air Volume Fume Hoods
- Section 15907: Testing Adjusting and Balancing

The type of hoods employed for use at the NIH should be based on a comprehensive life-cycle cost analysis that accounts for all system features required by the Division of Safety. Variable or constant-volume hoods may be considered, but the health and safety of building occupants must not be compromised under either option. The use of variable air volume (VAV) fume hoods is highly recommended. The ongoing maintenance cost of any option should be considered in cost analysis.

Hazardous experiments involving toxic chemicals and/or unpleasant odors must be conducted within a chemical fume hood. Use of a chemical fume hood allows toxic materials and dust to go into the laboratory building exhaust system and be discharged to the outside.

A minimum system capacity is one 1 200 mm chemical fume hood (nominal 3.54 L/s) for every other laboratory module. Distribution capacity should be one 1 200 mm chemical fume hood per laboratory module. The Program of Requirements should govern whether the requirements are over this limit.

The NIH Division of Safety shall be consulted to ensure that it has discussed the needs of the requestor and has determined the best containment device (fume hood, canopy hood, slot hood, trunk exhaust, downdraft table, etc.) for the research effort. All specialty-made or shop-fabricated canopy hoods, slot hoods, sprinkle exhaust, and so on should be designed and constructed to the latest edition of industrial ventilation.

Auxiliary air-type laboratory hoods should not be used in new laboratory facilities. These hoods should be considered only in the replacement of existing auxiliary air fume hoods and then only if they are continuously monitored with respect to air balancing.

In any fume hood retrofit application for existing facilities, the A/E firm should verify existing system capacities inclusive of the auxiliary air and laboratory supply and exhaust system characteristics. Once it has been assessed in coordination with the Resource Management Section that the system(s) can support the addition or replacement of an existing bypass hood or auxiliary air hood, this information should be documented and the design allowed to progress.

Note that auxiliary air hoods discharge untreated or partially treated air just in front of the face of the hood (usually at head level), and a scientist working at the hood must

work in unconditioned air. Partial heating of the air supply in the winter reduces the economical advantage of this type of hood. If improperly balanced, some of the auxiliary air may not enter the hood but will enter the air-conditioned space of the laboratory, sweeping with it some of the contaminated air from the hood, which is an undesirable condition.

The laboratory air supply distribution system should be sensitive to air motion within the laboratory space. Fume hoods rely primarily on face velocity through the hood's face to provide a safe working environment for the researcher.

To optimize the performance of the hoods, they need to be located away from interfering drafts, airflow disturbances, supply and exhaust, and pressure differentials created by the swing of doors. Personnel circulation characteristics in front of the hood's face should be minimized.

New and existing chemical fume hoods shall have as design criteria a face velocity of 0.51 ± 0.10 m/s with a uniform face velocity profile of ±10 percent of average velocity with the vertical sash fully open.

The A/E must realize in the early design phase that proper hood performance can be achieved only if the equipment is properly installed, the system is connected to a properly designed exhaust system, the supply system is capable of delivering the hood ventilation requirements, and the location of the hood has been properly selected within the laboratory area. For correct positioning of the laboratory hood, the designer must follow the design methodologies detailed in the NIH publication *Methodology for Optimization of Laboratory Hood Containment* to evaluate the likely hood containment performance.

Improper assessment of any of these factors will result in poor hood performance. Fume hoods and biological safety cabinets at the NIH are used continuously and should be "on" 24 hours per day, 7 days per week. In addition, there should not be user control or nighttime setback control capability.

F.16.1 Variable Air Volume Hoods: VAV hoods may be considered for use in NIH buildings provided the following issues are evaluated and requirements met:

- The hood must meet current fume hood specifications, with the exception that they are not the bypass type. However, partial bypass may be needed to meet

minimum exhaust requirements for the lab to maintain face velocity at 150 mm sash height.

- The hood should have no air-cleaning (HEPA or charcoal) or stack-sampling devices in the exhaust system (stack sampling is done on high-level-radiation hoods; biological cabinets have HEPA filtration). Varying the volume may interfere with the operation of this equipment or the current monitoring techniques used.
- The hood should have no other auxiliary equipment (high-velocity/low-volume exhaust systems) on the same exhaust fan. This type of equipment is generally designed for a fixed volume and may not function properly if the volume of flow is decreased.
- The laboratory must remain under negative pressure with respect to the corridor or adjoining rooms even at the minimum exhaust rate, if negative pressure was part of the original laboratory design. When the exhaust quantity is reduced, the supply quantity must be reduced by the same volume.
- The laboratory must maintain minimum required air changes per hour (six) with hood(s) in the minimum exhaust rate position.
- There should be no extenuating circumstances based on hood and/or laboratory use that preclude the use of VAV systems. Examples of these circumstances might be (1) odorous compounds used on the lab bench and (2) excessive heat generation in the laboratory from process equipment or high-release compounds that require full exhaust rate dilution. These conditions might produce hazardous conditions if the exhaust volume is reduced.
- An airflow monitoring/alarm device must be installed at the hood to provide operating information to the hood user. The methods that are to be evaluated for monitoring the airflow include (1) velocity sensing in the hood side wall, (2) sash position determination, and (3) pressure sensing between hood and room.
- An override capability must be provided to allow the user to have maximum exhaust regardless of sash position.
- It is important for the hood user to know whether the hood is a variable air volume hood and to understand how it operates.
- Control response time and stability should be reviewed to provide consistent repeatable performance.
- A constant face velocity should be maintained at the fume hood sash at varying sash openings. The following methodology should be evaluated to achieve the constant face velocity: (1) velocity measurement in the ductwork, (2) velocity measurement of the hood in the annular space between the outside and inside

casing, and (3) direct sash position measurement. The analysis should consider the following factors. First, the measurement of velocity pressure is difficult in the exhaust ductwork. The air velocity typically is very low, with correspondingly low velocity pressure. In addition, the devices may become corroded if the exhaust stream contains material that will attack the sensor. Second, air velocity measurements in the annular space are sensitive to changes in airflow patterns in the room as well as in the hood. Third, an option is to vary the sash position, which could be connected by a cable to a potentiometer or other control system that transmits a signal to the volume control, which opens or closes the damper.

F.16.2 Fume Hood Testing and Alarms System: Fume hoods in new laboratory facilities should have a pressure-independent flow-monitoring device connected to a local audiovisual alarm within the laboratory area. For existing facilities, the implementation of airflow devices for fume hoods occurs during the renovation phase. When the fume exhaust falls below a preset safety level, the alarm will sound and the alarm light will come on.

All parts that are to be in contact with vapors/fumes in the hood, i.e., the sensing device, wiring, and so on, should be chemically resistant. All alarm systems should be UL approved. There should be a means to shut off the audible alarm to reset. The alarm should have an internal timer so that the audible alarm is reactivated after a specified time (adjustable between 5 minutes and 15 minutes). The alarm should have the capability to set the controller's setpoint to the safety level desired. There should be a means for setting the controller's setpoint to the exhaust level desired. This adjustment shall be "internal" so that it is not readily adjustable by operating personnel. Upon return to normal flow, the alarm should sound again until reset.

The ACGIH Guidelines are referenced in the guidelines for fume hood testing. The ACGIH requirements do not specifically address all testing issues required by the NIH. The following criteria shall be used for testing fume hoods in NIH buildings:

The fume hood manufacturer, no later than 30 days after receipt of the order, shall provide to the owner the use of a state-of-the-art fume hood test facility meeting the requirements of the latest SMACNA Standard LF 10.

The hood manufacturer shall conduct modified ASHRAE Standard 110, 1995, protocol of 1 800 mm hood of similar design to the type specified. The bypass shall be designed so that face velocity does not exceed the maximum as the sash is

lowered in a variable volume hood. Variable volume fume hood protocol of 1 800 or 1 200 mm shall be tested in accordance with the Modified ASHRAE 110 Test for minimum baseline requirements. The manufacturer shall provide a fume hood control system at its state-of-the-art test facility meeting the requirements of the latest SMACNA standard LF 10 on its cost for acceptance by the NIH prior to the delivery of hoods for installation. The minimum of 50 percent installed hoods at site will be again offered for testing on site by the contractor after installation and building balance prior to occupancy. The contractor shall arrange for tests to be conducted by an NIH-approved independent testing contractor. The specifications should clearly identify the type of measurement devices that test a constant face velocity, such as hot wire anemometer, heated thermocouple anemometer, impact tube and side wall or other static tap, pitot tube, and so on, or measure volume or mass flow rate using devices such as orifice and differential pressure measurement system, nozzle and differential pressure measurement system, turbine flow meter, swirl flow meter, and vortex shedding meter. A hood of design similar to the type specified in the ASHRAE Standard 110 will have the parameters described in the next paragraph.

F.16.3 Fume Hood Testing: Note: This item must be included in the balancing specifications, the fume hood control specifications, and the hood specifications.

F.16.3.1 Fume Hood Containment Testing (Onsite): Laboratory areas and variable volume fume hoods shall be tested as installed to assess the level of containment. The test identified below was created by Farhad Memarzadeh, Ph.D., P.E., of the National Institutes of Health in 1997 and revised by Memarzadeh and Brightbill in 1999 and shall be performed during static and dynamic conditions. Testing shall be conducted as outlined below for 50 percent of the hoods provided in the project. Tests shall be characterized and referred to in two basic categories, “Static” and “Dynamic.” While elements of both static and dynamic testing exist in both test categories, these names are generally used for reference.

F.16.3.2 Static Testing: Testing shall be conducted in accordance with ASHRAE 110 - *Method of Testing Performance of Laboratory Fume Hoods* with the following modifications. This is primarily a test of the hood and laboratory configuration.

Hoods will be tested with simulated apparatus. This apparatus will consist of two each 3.8 L round paint cans, one 300 x 300 x 300 mm cardboard box, and three each 150 x 150 x 300 mm cardboard boxes. These items will be positioned from

150 to 250 mm behind the sash, randomly distributed, and supported off the work surface by 50 by 50 mm blocks.

- The test gas will have a 6 L/min flow rate.
- Each test duration will be 5 minutes.
- Acceptable test results shall not exceed 0.05 ppm.
- At the conclusion of each 5 minute test, there will be three rapid walk-bys at 300 mm behind the mannikin. Each two walk-bys will be spaced 30 seconds apart. If there is a rise in test gas concentration, it cannot exceed 0.10 ppm and must return to 0.05 ppm within 15 seconds.
- There will be a minimum of three and a maximum of five persons in the test room during the test procedure.
- Representatives of the NIH will witness the tests.

F.16.3.3 Dynamic Testing: Dynamic testing primarily tests the dynamic performance of the fume hood control system. This group of tests measures hood performance parameters through various dynamic "events." Events shall include four sash movements up and down across differing ranges: 25-100 percent and 50-100 percent, sash movements of other hoods on the exhaust duct, walk-bys in front of the hood, and opening and closing the laboratory door commensurate with a person entering and exiting the room. Hood parameters to be determined for each event are defined as follows (refer to Figure F.16.3.3 below for a graphical representation of some parameters):

- **Measured Face Velocity** (FVm expressed in m/s): Face velocity measured in the plane of the sash. Samples shall be recorded at no less than 10 Hz. Sensing methodology shall have an internal time coefficient of no more than 100 ms.

  Definitions:

  a. The internal time constant (ITC) is the amount of time it takes the sensor to respond 63 percent of the way to a step change.
  b. The response time is the length of time to get to within the stated accuracy of the sensor.
  c. Response time = ITC x 3 or 5 depending on the accuracy. Example: If the response time is 200 ms, the ITC = 40-70 ms.

There shall be a point sensor located in the middle of the face opening when the sash is at the lowest position during the tested event. No fewer than three point sensors shall be used. Averages shall be calculated for any point in time to assess overall measured face velocity; however, individual sensor samples shall be used in calculating turbulence intensity (TI).

- **Total Exhaust Airflow** (TEF expressed in L/s): Total exhaust flow measured in the main exhaust duct leaving the hood. This parameter shall be recorded at no less that 10 Hz. The sensing methodology used for the recorded data shall represent the total airflow through the full range of flows and be validated by independent multipoint measurement. If the fume hood control system uses a flow-sensing element, that element may be used assuming it can be calibrated across the full range of flow. Sensing elements must have an internal time coefficient of no more than 20 ms.
- **Variable Face Area** (FAv expressed in meters): Face area of the hood that varies as the sash is moved within specified limits.
- **Fixed Face Area** (FAf expressed in meters): Face area of the hood with sash at minimum position (minimum position should correlate with the minimum bypass flow through the hood).
- **Hood Airflow Leakage** (HAL expressed in L/s): The difference in airflow between the measured airflow through the face (at minimum position) and the total airflow measured in the exhaust duct.
- **Calculated Face Velocity** (FVc): Face velocity determined from the following equation: (TEF-HAL x 1 000)/(FAv + FAf).
- **Steady State Face Velocity** (SSFV): The average of all sampled face velocities for a 5 second period. Two SSFVs will be determined for both measured face velocity and calculated face velocity; one before the event (SSFVb) and one after (SSFVa). The SSFVa will start 2 seconds after the end of TSS. The second suffix of m for measured and c for calculated shall be used to indicate the type of assessment.
- **Face Velocity Baseline** (FVBL): The average of SSFVa and SSFVb.
- **Control Linearity** (CL expressed in %): Abs (SSFVa-SSFVb)/(FVBL) x 100.
- **Time to Steady State** (TSS_{10} and TSS_5 expressed in seconds): The elapsed time from the initial sash movement until the FVc reaches and stays within ±10 percent or ±5 percent of FVBL (as indicated by the subscript).
- **Face Velocity Overshoot/Maximum Deviation** (FVO expressed in percent): Calculated using the Calculated Face Velocity sample farthest from the FVBL (FVf)

throughout the test per the following equation: (Abs (FVf-FVBL)/FVBL) x 100. Samples include initial face velocity deviation immediately following the sash movement as the controls initially respond to the movement of the sash.

- **Response Time Constant** (RTC expressed in seconds): Elapsed time between initial movement of the sash and the initial subsequent movement of the exhaust valve.
- **Steady State Deviation** (SSD expressed in %): Face velocity variation from SSFVa or SSFVb as applicable. Calculated using the farthest sample from the applicable SSFV (FVf) using the following equation: (Abs (FVf-SSFVx)/SSFVx) x 100.
- **Controllability** (expressed in mV/mm): Describes controller response to changing sash position, i.e., controller's response signal change per unit distance of sash movement.
- **Sash Position** (SP expressed in mm): For vertical sashes, vertical distance from the sill of the hood to the bottom of the sash. The minimum sash position shall correlate with the position of the sash when the minimum flow through the hood is all through the face. Maximum sash position shall be defined as a distance of 550 to 650 mm. This parameter shall be recorded at no less than 10 Hz.
- **Controller Output** (CO expressed in volts): Control output to the controlling exhaust air valve. This parameter shall be measured and recorded at no less than 10 Hz.
- **Turbulence Intensity** (TI expressed in m/s): Calculated root mean square of the fluctuating face velocity determined using FVm. This value shall be calculated for each of the steady state conditions preceding and following each event. This shall be correlated with a "box leakage factor" of the installation using the *Methodology for Optimization of Laboratory Hood Containment* (MOLHC) by NIH Office of Research Services, Farhad Memarzadeh, Ph.D., P.E., principal investigator. While this value does not have a pass/fail requirement, it is the fundamental indicator of containment and therefore shall be clearly reported.

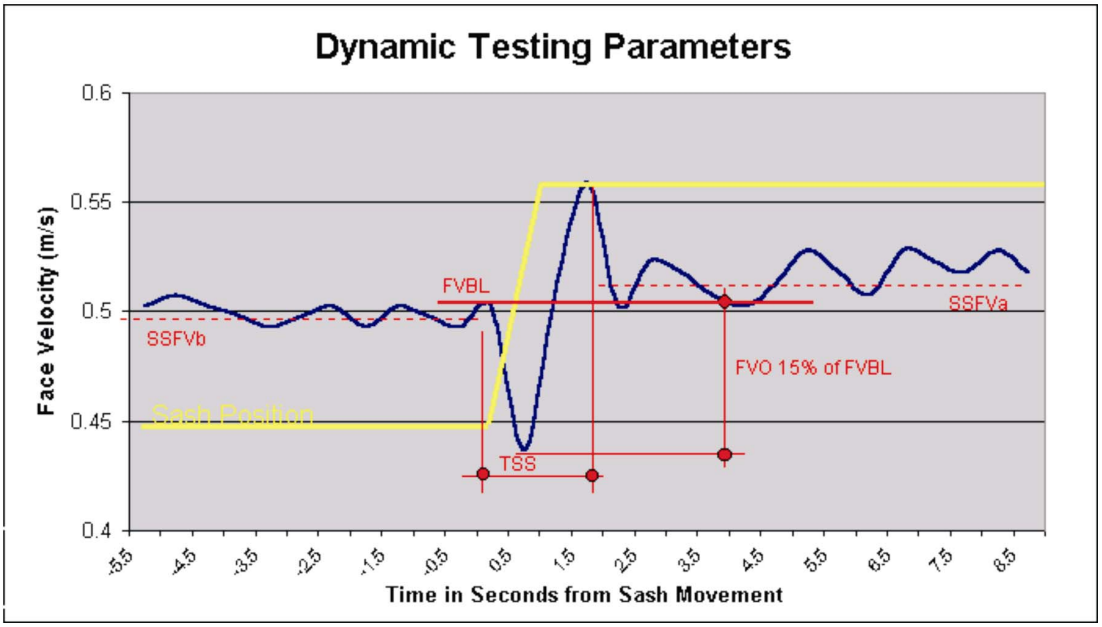

Figure F.16.3.3 Dynamic Testing Parameters

F.16.3.4 Parameter Performance

Parameter Performance Requirements:

- Face Velocity Baseline (FVBL): 0.51 m/s ± .05 m/s
- Control Linearity (CI expressed in %): < 2%
- Time to Steady State$_{10}$ (TSS$_{10}$ expressed in seconds): <2 seconds
- Time to Steady State$_5$ (TSS$_5$ expressed in seconds): <3 seconds
- Face Velocity Overshoot/Maximum Deviation: <15%, which means at no point throughout the test shall a sample be recorded <0.43 m/s or >0.59 m/s
- Response Time Constant (RTC expressed in seconds): <0.5 seconds
- Steady State Deviation (SSD expressed in %): <5% assessed using calculated face velocities
- Controllability (expressed in mV/mm): >12 mV/25.4 mm

F.16.3.4.1 Alternate Parameter Performance Requirements: The following performance parameters are alternate requirements that can be used in assessing acceptable dynamic responses:

- Face Velocity Baseline (FVBL): 0.51 m/s ± .05 m/s
- Calculated Face Velocity (FVc): All samples >0.255 m/s and <0.89 m/s, meaning that at no time during the event shall the calculated face velocity be outside that range. Any sample recorded beyond that range will result in assessing the response as unacceptable.
- Control Linearity (Cl expressed in %): <2%
- Time to Steady State$_{10}$ (TSS_{10} expressed in seconds): <1.6 seconds
- Time to Steady State$_5$ (TSS_5 expressed in seconds): <2 seconds
- Response Time Constant (RTC expressed in seconds): <0.5 seconds
- Steady State Deviation (SSD expressed in %): <5% assessed using calculated face velocities
- Controllability (expressed in mV/mm): >12 mV/25.4 mm
- Test Execution: Testing agency shall be equipped to execute the testing and assess all performance parameters on site the day of the test. Data acquisition of required parameters shall be simultaneous.
- Test Documentation: All testing, calculated, and recorded parameters shall be presented in a report that shows the recorded parameters graphically and tabulates and summarizes all the results. Performance of the hood, the hood controls, and the laboratory in general shall be described and summarized.

Note: Fume Hood Control Testing (Offsite-Mockup) must be included only in the control manufacturer's specifications.

F.16.3.5 Fume Hood Control Testing (Offsite-Mockup): The manufacturer of the proposed fume hood control system shall mock up a fume hood installation and demonstrate the performance of its system to validate that they can meet the requirements specified herein. The offsite test shall include all parameters under the control of the control system (FVBL, TSS, CL, RTC, SSD, and Controllability). It is not necessary to mock up the installation and assess TI. Events to be tested off site include all specified sash movements on the hood being tested. Walk-by and door-opening affects are not required for the offsite test.

The testing shall be accomplished by an independent testing agency approved by the A/E and the NIH. Reports shall be provided with the laboratory control submittals, and no approval will be given for the fume hood control system until documentation of successful demonstration of the performance requirements is submitted.

H. Plumbing

The following Design Policy and Guidelines apply to all systems within the plumbing engineering discipline. The purpose is to provide uniformity of design based on the established NIH Architectural and Engineering Design Policy and Guidelines. Systems may include sanitary, storm, medical gas and vacuum, domestic water piping, utility distribution, plumbing fixtures, and automatic controls.

H.1 Reference Design and Safety Guidelines for the Plumbing Designer

The NIH is a progressive and dynamic biomedical research institution where state-of-the-art medicine is the standard practice. To support state-of-the-art research and medical care, the facilities must also be state of the art. It is the NIH's intent to build and maintain the physical plant and facilities in accordance with the latest standards.

It has been the NIH experience that renovation/rehabilitation of existing facilities do not lend themselves to incorporating the "latest" standards of the industry, primarily because of outdated and inadequate plumbing systems.

The architect/engineer (A/E) should be alerted to this situation and make an evaluation early in the design stage to determine the feasibility of implementing the latest standard. The A/E should document such findings, provide recommendations, and report them to the Project Officer for a decision on how to proceed and to request a variation from the existing Design Guidelines if necessary.

The A/E design firm should use and comply with, as a minimum, the latest issue of the following design and safety guidelines. In addition, the A/E shall use other safety guidelines received from the NIH Project Officer or as required by program. The A/E should utilize the latest versions of guidelines available at the time the project proceeds with schematic design.

The criteria include, but are not limited to, the following:

- The *International Building Code* and the *International Plumbing Code:* International Code Council, Inc., and Building Officials and Code Administrators

(BOCA) International, Inc.: 4051 West Flossmoor Road, Country Club Hills, IL 60477-5795.

- *American National Standard for Emergency Eyewash and Shower Equipment (ANSI Standards Z358.1)*: Industrial Safety Equipment Association, New York, American National Standards Institute (ANSI).
- *Planning and Design of Laboratory Facilities:* Baker, J.H., Houang, L. (1983) the World Health Organization (WHO), Offset Publications, 72:45-71.6.
- *Occupational Safety and Health Standards*, CFR 29, Part 1910: U.S. Department of Labor, Occupational Safety and Health Administration (OSHA).
- *Guidelines for Research Involving Recombinant DNA Molecules:* U.S. Department of Health and Human Services, U.S. Public Health Service, National Institutes of Health, *Federal Register,* Vol. 51, No. 88: 16957-16985, Bethesda, MD: National Institutes of Health.
- *Laboratory Safety Monograph: A Supplement to the NIH Guidelines for Recombinant DNA Research,* U.S. Department of Health and Human Services, U.S. Public Health Service, National Institutes of Health, Bethesda, MD: National Institutes of Health.
- *Guidelines for Laboratory Design: Health and Safety Considerations:* DiBernardinis, L., and J.S. Baum, M.W. First, H.T. Gatewood, E.F. Gordon, and A.K. Seth. 1987. New York: John Wiley and Sons.
- *Biosafety in Microbiological and Biomedical Laboratories:* U.S. Department of Health and Human Services. Washington, DC: Public Health Service, Centers for Disease Control and Prevention, and National Institutes of Health, HHS Pub. No. (NIH)88-8395.
- *NIH Guidelines for the Laboratory Use of Chemical Carcinogens:* U.S. Department of Health and Human Services, Bethesda, MD: National Institutes of Health, NIH Pub. No. 81-2385.
- *National Fire Codes,* all volumes: National Fire Protection Association (NFPA), 1 Batterymarch Park, Quincy, MA 02269-9101.
- *Guide for the Care and Use of Laboratory Animals:* U.S. Department of Health and Human Services, Bethesda, MD: National Institutes of Health, Pub. No. 86-23.
- *Guidelines for Design and Construction of Hospital and Health Care Facilities:* The American Institute of Architects Committee on Architecture for Health with assistance from the U.S. Department of Health and Human Services. American Institute of Architects Press, 1735 New York Avenue, NW, Washington, DC 20006.

- *Medical Laboratory Planning and Design:* College of American Pathologists, Skokie, IL.
- American Society of Hospital Engineering, all volumes: American Hospital Association, 840 North Lake Shore Drive, Chicago, IL 60611.
- *Regulations Governing the Installation of Plumbing, Gas Fitting and Sewer Cleaning in the Washington Suburban Sanitary District:* Washington Suburban Sanitary Commission (WSSC), 4017 Hamilton Street, Hyattsville, MD 20781.
- *Standards for Medical-Surgical Vacuum Systems in Hospitals,* PAMPHLET, p. 21, Compressed Gas Association (CGA).
- *Uniform Federal Accessibility Standards*, FED STD 795.
- *The Americans with Disabilities Act Accessibility Guidelines*.
- ANSI Standard Z 358.1: American National Standards Institute, Inc., 1430 Broadway, New York, NY 10018.
- *ASPE Data Books*, all volumes and supplements: American Society of Plumbing Engineers (ASPE), 3617 Thousand Oaks Boulevard, Suite 210, Westlake, CA 91362.

H.2 Building Design Considerations

The A/E should include at the completion of the schematic design a report on proposed plumbing systems in the Basis of Design. The report should justify the complete design concept of the A/E. Detailed plumbing design criteria, computations, schematic system diagrams, commissioning plan criteria, economic analysis, and life-cycle costing comparisons shall be included as a part of the Basis of Design report.

Operational and repair manuals for all plumbing supplied equipment on the project are required and should be called for in the specifications. A meeting shall be specified to turn over the equipment inventory and manuals to the Office of Research Facilities.

The A/E should include, as a minimum, evaluation of the following topics prior to completion of the schematic design phase. Results of the evaluation should be defined in the Basis of Design report.

General Plumbing:

- Project utilities and capacities
- Descriptions of various services
- Proposed piping system, its components and materials
- Storm water management plan for the building
- Plumbing equipment locations and access
- Applicable codes, guidelines, and standards
- Basic design criteria of systems (sizing, pressures, zoning, temperature, etc.)

Fixtures and Trim:

- Distribution of plumbing services
- Zoning, modularity, and flexibility
- Water conservation plan and opportunities
- Control methodology
- Redundancy and reliability

Commissioning Plan Criteria:

- Space required for storage/spare parts/maintenance administration
- Laboratory safety equipment
- Compressed gas and air systems
- Vacuum systems
- Natural gas/fuel systems
- Pure water systems
- Process/animal water systems
- Filtration requirements
- Measuring and monitoring methodology

H.2.1 Plumbing Systems Inspections: The installation of plumbing systems at the NIH is generally not inspected by municipal plumbing inspectors, as would be required and typical of installations off campus. As such, it is critical that the design engineer work with the NIH to ensure plumbing installations are code compliant and meet the intent of the design documents and NIH Guidelines. In some cases, the A/E may be requested to provide inspection services, and this should be considered during the contract negotiations. In any case, the A/E must not only perform field

reports with the intent of observing general compliance with design documents, but also should assist the NIH in recognizing non-code-compliant workmanship. It is the intent of the NIH that each system installation meet or exceed applicable codes, inspection, and testing requirements as well as requirements of the NIH Design Policy and Guidelines.

In general, each plumbing installation should be inspected and thoroughly tested prior to concealment. Plumbing work should be reviewed for proper slope, joints, layout, materials, and installation. Testing should be provided and witnessed prior to backfill, concealment in walls, and again at final completion. All installations shall be tested and inspected to at least the same degree as would be required for installations off campus. Final system tests should consider proper installation and adjustment, code compliance, completeness, and leakage. The engineer should include in specifications that systems must be tested and inspected, and that qualified licensed personnel in accordance with WSSC requirements shall perform work.

H.3 Plumbing Systems

H.3.1 Types of Systems: The plumbing systems at the NIH are categorized as domestic potable water plumbing systems and industrial nonpotable water plumbing systems. In addition, there are medical/laboratory gas and vacuum systems, fuel systems, various types of pure water systems, and process water systems. All plumbing systems installed in NIH buildings shall meet the requirements of the WSSC governing the installation of plumbing and gas fitting regulations unless otherwise stated by these guidelines.

Domestic plumbing systems should consist of potable hot and cold water piping, domestic water heaters, waste and vent piping, stormwater, and other common general use systems. These systems typically serve areas such as toilets, locker rooms, kitchens, laundries, patient rooms, and so on, which may be common to all building types.

Industrial plumbing systems should consist of, but not be limited to, nonpotable hot and cold water piping, water heaters, acid waste and vent, conditioned water systems, medical/laboratory gas and vacuum systems, rackwashing and cagewashing equipment, glassware-washing equipment, safety equipment, and process water systems.

Plumbing requirements are often dictated by end users during the design phase and are subject to change because of improving equipment technology and the need to remain state of the art when the construction process is completed. The design engineer must clearly understand the wide range of utility requirements and design the distribution systems to be flexible and support future connections.

Plumbing systems should support the needs of the building occupants, be easily maintained and operated, have reliable and redundant components, and be efficient to operate. These systems should not impose harm on user equipment because of excessive pressures, improper water temperature, or inadequate drainage facilities. Contained pieces of equipment have numerous piping connections, which must be concisely detailed and engineered in the contract documents.

H.3.1.1 Functional Design Considerations: Special consideration should be given to the design concepts discussed below in order to provide long-term capability, flexibility, and maintainability.

- Overall, the design of the piping distribution should be based on a modular layout, even though this arrangement sometimes limits the configuration and locating of individual spaces.
- Piping distribution systems should consist of vertical risers located in chases, horizontal mains, and individual room runouts to accommodate the architectural layout of the building. In general, the NIH uses a utility corridor concept, or interstitial space concept, in the case of a corridor utility shaft concept, or an external utility shaft concept. The design approach should result in a repetitive and standardized grid arrangement of the risers, mains, branches, and runouts. Piping and valving arrangements shall allow for easy shutdown of individual laboratories, floors, and zones of the system without affecting adjacent areas for modifications and maintenance to the systems. The primary goal for vertical distribution systems is to minimize floor penetrations in laboratory areas.
- Ideally, piped services, except waste and vent systems, should be distributed in a double-ended horizontal loop that may be sectionalized for alterations and repair. A utility corridor concept, either interior or exterior, should be utilized with vertical risers feeding horizontal loops.
- Isolation valves should be provided to accommodate easy maintenance at each module, group of toilet rooms, program suite, or other branches where routine service will be required. All isolation valves should be accessible and located on

the floor being served or in the interstitial space serving the respective program area.

- Horizontal distribution mains should be located on the floor of the equipment or fixtures to be served. It is not desirable to upfeed through a floor slab to fixtures above unless absolutely required by rough-in location.
- Adequate space should be provided for accessibility to permit modifications and maintenance to the system. Service pipe runouts placed at regular intervals in service shafts or utility corridors will ensure maximum accessibility for future connections with a minimum of disruption to research programs in adjacent spaces. Runouts shall be valved and capped.
- All equipment that must be serviced, operated, or maintained should be located in fully accessible positions. Equipment should include, but not be limited to, valves, cleanouts, motors, controllers, dampers and drain points, etc. Where required, 1.9 mm steel access panels shall be provided. Doors installed in fire-rated walls or shafts shall be labeled and shall match the rating of the construction. Doors shall be of sufficient size to allow access to all components; minimum size shall be 300 by 400 mm. Doors in toilet rooms shall be Type 304 stainless steel or have a chrome-plated finish.
- Pipe sizing should be designed on calculated flow rates, acceptable diversity factors, minimum and maximum velocity limitations, and reasonable allowable pressure drops for the various types of systems. Where there are architectural and structural allowances for building additions, pipe sizes shall be increased to allow for building expansion.
- Piping material should be selected on the basis of system pressures, temperatures, and the type of medium flowing to withstand corrosion and erosion. Piping and fittings in all NIH buildings shall be specified in accordance with Table F.6 in General Design Guidelines, Section: Mechanical, Piping Systems.
- All plumbing piping systems must be identified using pipe labels as required by General Design Guidelines, Section: Mechanical, Systems Identification. Difficulty in identifying individual pipelines creates serious potential for cross-contamination.
- Proper assessment of required water resources and quality is essential for NIH buildings. The quality of water required (distilled, deionized, or treated by reverse osmosis with deionizers) needs to be determined so that the proper selection of water treatment equipment can be made.
- Proper backflow protection should be provided to protect domestic potable water systems from industrial nonpotable systems and miscellaneous equipment.

- Provision of proper pipe sleeving at penetrations through floors is especially important. Many functions have been disrupted or damaged because of leakage on floors above passing through pipe penetrations. Pipe sleeves should extend at least 50 mm above the floor and 25 mm below the floor and should include a built-in water stop and appropriate seal. All penetrations through rated structure shall be properly fire/smoke stopped.
- Plumbing fixtures and trim should be carefully selected to meet the requirements of building users. Fixtures should be of the low-consumption type as defined by WSSC and have flow restrictors as required. Elbow, knee, foot, and automatically activated faucets shall be provided as dictated by program requirements.
- Submicron HEPA filters between vacuum traps and fixture valves should be provided to eliminate microorganisms in hazardous areas such as BSL-3 or BSL-4 labs.
- Electric water coolers should be specified to use chlorofluorocarbon (CFC or HCFC)-free refrigerants and be completely assembled without the use of lead solder.
- All piping systems designed for NIH buildings should be specified with a joint method prohibiting the use of lead solder.
- Building-wide water softeners and treatment equipment are generally not required for NIH buildings because of the good quality of water from WSSC's distribution network. Program requirements suggesting the use of such equipment shall be seriously challenged by the A/E and justified in the early design stages.

H.3.1.2 Fixtures and Trim: Those items should be selected which aid in maintenance of the aseptic environment. Plumbing fixtures should be selected in accordance with applicable national standards to provide appropriate function, durability, quality, and ease of maintenance. The A/E should consider sanitation, durability, and potential for cross-infection in selection of plumbing fixtures, which should be made of nonabsorptive, acid-resistant materials. Lavatory centersets, except in general public areas, nurseries, and scrub areas, should be fitted with wrist blade handles or hard wired and on emergency power sensor-operated fixtures. Sinks in nurseries should have retractable, foot-operated valves while those in scrub areas will have either foot-operated valves that pivot upward for cleaning or knee-operated valves. Clinical sinks will have an integral trap in which the upper portion of the water surface provides a visible trap seal. Showers, lavatories, and sinks except for service sinks will be equipped with devices to limit maximum flow. Nonslip walking surfaces should be provided in showers and tubs.

Fixtures, where required, shall meet the requirements of the Uniform Federal Accessibility Standards (UFAS). Insulating trap kits shall be provided on all lavatories as required for disabled persons under UFAS.

Items should be selected which aid in the maintenance of the aseptic environment. Fixtures should be made of nonabsorptive, noncorrosive material. Items of equipment serviced by utility lines (air, gas, water, and the like) should be suitably valved so that each piece of equipment can be isolated without interruption of services to any other equipment.

Thermostatic mixing valves should be provided for hydrotherapy baths, x-ray processors, and other fixtures requiring controlled-temperature water supplies, if the equipment manufacturer does not supply a valve. Fixtures, devices, and equipment (autopsy tables, for example) must be installed to ensure no cross-connection between potable and nonpotable water supplies.

Shower walls and floors should be constructed of ceramic tile installed on a mortar bed. A maximum 15 mm lip will be permitted on showers. Temperature-regulating mixing valves with a pressure balancing and flow control device shall be provided for all showers.

All water closets shall be wall mounted with low consumption, 6 L per flush, of the siphon jet type. Blowout type closets are permitted in the lab side of the airlock for changing rooms in BSL-3 and BSL-4 laboratories. Water closet seats should be institutional weight of the open-front type, less cover, and furnished with heavy-duty stainless steel check hinges. Where flushometers are furnished with integral bedpan washers, the critical level of the flushometer vacuum breaker shall be a minimum of 150 mm above the full upright position of the bedpan spray arm.

All urinals should be wall mounted, 4 L per flush, low consumption, and of the siphon jet or blowout action type. Washout urinals must not be used.

Lavatories and Sinks: Wall-mounted lavatories shall be of vitreous china or stainless steel construction with an integral backsplash and should include concealed-type chair carriers. Counter-mounted lavatories should be constructed of enameled cast iron or stainless steel except where the fixture is integral to the countertop. Self-rimming and undermount lavatories should be bedded in sealant before the fixture is set.

Sinks should be selected for appropriate durability and corrosion resistance. The design engineer should consider the specific application and location of the fixture in assessing the need for Type 316 stainless steel. All stainless steel sinks shall be securely fastened to the countertop with mechanical-type fasteners. Snap clips must not be used.

Janitor mop sinks and service sinks should be constructed of enameled cast iron or stainless steel.

Water closets, urinals, and lavatories serving the employee food-service rest rooms shall be provided with electrically actuated and emergency power, hands-free sensor operation. In new construction, all lavatory faucets, urinals, and water closets in public rest rooms should be provided with hand-free hard-wired electric flushometers wired to emergency power. The sensor serving the fixture should be adjustable and shall be recessed in the wall behind the fixture. The sensor design should be adjustable and replaceable. Battery-operated fixtures must not be used.

Dedicated hand-washing sinks in commercial food production areas should have hand-free controls.

Specifically designed and manufactured carriers shall be provided for all wall-mounted fixtures. Pipe chases should be sized to accommodate carriers.

Bathtubs and Showers: Standard patient-room bathtubs at the NIH shall be constructed of enameled cast iron and shall include durable nonslip surfaces. Automatic actuated wastes shall be provided at tub waste outlets. Shower faucets shall be of the cycling-type valve, rotating through cold to the hot position with an ADA-compliant lever handle. Shower valves shall always be of the thermostatic type, except that in the case in which the supply to the shower is provided with hot-water over-temperature protection, pressure balance valves will be accepted. The limit stop on the shower faucet shall be set at 43 °C (110 °F) maximum. Faucet trim, levers, and escutcheons shall be constructed of stainless steel or chrome-plated brass. Shower and tub faucets shall include integral check-stops. Reverse-core faucets should not be specified, such as those occasionally provided in back-to-back applications. Plumbing supplies at the NIH are to be roughed in properly, with hot water on the left and cold water on the right, as would apply during normal use of the fixture.

Faucets: Faucets shall be selected which are suitable for the appropriate application, and with special consideration of the need to maintain an aseptic environment. Only laminar flow-type, non-aerating stream faucets shall be utilized in clinical areas of NIH facilities. Aerating stream faucets are not utilized in BSL-3/BSL-4 spaces. All laboratory sink faucets shall be provided with integral vacuum breaker spouts.

Where foot pedal valves are desirable, units, which mount above the floor in casework with fold-up pedals, are preferred over on-floor mounting, because of increased sanitation. Piping should be concealed under casework so as not to preclude the use of cabinet space. Where faucets include both hand and foot pedal operations, separate isolation valves shall be provided for the foot pedal valve to facilitate maintenance.

Where two-handle wrist-blade faucets are required, ceramic-type faucet valving with brass or stainless steel internal components are preferred over other means of valve closure. It has been found that ceramic valve faucets maintain handle alignment and are less prone to leakage than compression valving. At the minimum, all faucets should include a fully renewable valving design to minimize potential leakage and simplify maintenance.

Faucet spout length and gooseneck size should always be carefully matched to the sink size. The A/E must coordinate with the user to determine the appropriate location for swing versus rigid fixed spouts.

Fixture Trim: Fixture stops serving lavatories, sinks, and similar fixtures shall incorporate threaded inlets. The use of compression fittings is generally undesirable; however, a single compression connection at the downstream side of the fixture stop may be provided, except for foot or knee pedal-operated valves. Fixture stops shall be of the heavy-duty commercial grade type and shall be the loose-key type in public areas.

Fixture Traps and Drains: Fixture traps, drains, and tailpieces shall be selected of corrosion-resistant materials. Such trim for general sinks and lavatories shall be 17 gauge cast brass or stainless steel. An integral trap cleanout is not required because the trap can be easily removed without the increased potential for leakage of opening a cleanout built into the trap. Fixture drains, tailpieces, and traps on corrosion-resistant sinks, including sinks specified as Type 316, shall utilize stainless steel or other corrosion-resistant materials. Brass drains and traps are not utilized for

fixtures fitted with high-purity water outlets, but, rather, stainless steel or corrosion-resistant piping materials to match the waste system are utilized.

The drain and trap connection to lab sinks, fume hoods, and similar equipment should be of the mechanical joint type, to permit removal for maintenance. All connections downstream of the laboratory fixture trap are as specified for laboratory waste systems.

It is important that fixture supplies be appropriately anchored to the building structure. The plumbing fixture or device must not carry or be required to support the piping installation.

The engineer should require plumbing services to fixtures to be roughed in properly so as to preclude requirements for exposed offsets of trap arms, extensions, or excessive tailpiece or fixture supply length. Improper rough-ins often result in leakage, maintenance, and aesthetic concerns. Each fixture and equipment must be provided with independent isolation valves or supply stops. It is imperative that facilities staff be able to service fixtures, faucets, and equipment without disrupting other areas of the facility.

Plumbing Fixtures Serving BSL-3 and BSL-4: Special attention is provided to the selection of plumbing fixtures serving BSL-3 and BSL-4 spaces. Sanitation and resistance to fouling, durability, and prevention of stoppages are of the utmost importance. Fixtures with concealed spaces are not permitted. Lavatories are specified without overflows because of the potential for these concealed spaces to harbor pathogens. Fixtures with integral trap seals (such as water closets) are selected to ensure sufficient trap seal depths, and minimize potential for stoppages. Stainless steel blowout fixtures with 100 mm deep trap seals are available, or manufacturer-modified blowout bowls are utilized as required. Flushometer selection must be appropriate to match the fixture design to ensure proper operation. Water closets and faucets are of the electronic, hands-free type, hard wired and on emergency power. Drinking fountains located outside labs are of the hands-free operation type, utilizing electronic sensors or knee actuation. Indirect waste receptors in labs are constructed of stainless steel or equivalent sanitary, chip-resistant materials compatible with the disinfectant process. All faucets in the lab are actuated by electronic hard-wired and on emergency power sensors, or knee actuation. Foot pedal valves are provided with slow-close valving, are utilized only where selected by the NIH in lieu of electronic or knee actuation, and are arranged to

permit ready cleaning behind and under the device. Lab faucets are provided with specially designed vacuum breakers and are served by only the dedicated lab water distribution system.

Commissioning of Plumbing Fixtures: Proper adjustment and commissioning of plumbing fixtures, equipment, and appurtenances are vital to ensure proper operation, conservation of resources, and minimal maintenance. The engineer should specify that plumbing fixtures and faucets be properly commissioned. Flow rates, limit stops, temperature controls, and pressure regulators must all be adjusted for proper operation. Drinking fountains shall provide a sufficient stream at the bubbler to preclude contamination, without overshot or splashing. Water closet and urinal flushometers are adjusted for a proper and thorough flush. Automatic fixtures are adjusted for proper actuation and sensor range.

H.3.2 Water Supply Systems: The NIH obtains water from WSSC. The water is supplied through an underground grid network to the buildings. The water mains into the buildings serve the domestic potable water, the industrial nonpotable water, and the fire protection water system.

Each critical facility shall be provided with two water services, which shall be appropriately connected to the campus loop. Supply connections shall be to different mains/points on the NIH supply grid to ensure continued water supply. General lab facilities need not automatically be provided with two water supplies; however, the water service shall be double-fed. Proper backflow prevention devices shall be installed at the water service entering the building to separate the incoming water service into two distinct systems, one system being the building's fire protection system, and the second system being the building's domestic water. This arrangement shall protect the campus distribution system from backflow. Critical facilities may be provided with additional emergency water connection, isolated inside the building with a normally closed and locked shutoff valve and check valve, which shall terminate at an approved location. The emergency water connection shall be designed for use by a potable water tanker truck in the event of a catastrophic failure of the NIH/WSSC water supply. The emergency water connection shall connect to the water distribution system downstream of the main building domestic water service backflow preventer to eliminate any potential backflow to the incoming water supply.

Downstream of the building water service backflow preventers, additional backflow preventers shall be provided to isolate each subsystem (such as lab water system, mechanical water, etc.) This arrangement shall protect the building potable water system from backflow hazards. Except for those in BSL-3 and BSL-4 facilities, backflow preventers are generally not arranged in series because of increased pressure loss. Fire protection backflow preventers are not installed in series. In the case of BSL-4 lab water systems, the use of a break tank shall be considered.

The A/E shall determine the adequacy of the water pressure for the areas being designed. Water booster pump systems will generally be required at the NIH and shall be of not less than triplex design. Domestic water booster pumps shall be connected to emergency power. A minimum flowing (residual) water pressure of 276 kPa at the hydraulically remote fixture or equipment shall be provided. The system shall be sized to provide for both minimum flow requirements and maximum peak flow, with at least one redundant pump on standby. All pumps shall alternate in the appropriate lead-lag sequence, and include a pump exerciser function. Local control systems with system operating status and alarm condition readout are provided at the equipment. Remote signal to building automation system is generally limited to a general fault alarm for each system source. The use of an accumulator tank may be evaluated for non-clinical facilities but shall not be utilized in clinical applications because of the potential for bacterial growth. This minimum supply pressure is critical to proper fixture and equipment operation, especially with modern laboratory and hospital equipment and low-consumption water closets. It also minimizes the potential for a backflow condition.

A pressure-reducing valve assembly should be provided if required to limit the maximum water pressure to 552 kPa at any service outlet. A minimum of two pressure-reducing valves shall be provided in parallel, with a normally closed bypass. Pressure-reducing valves used for main system or pressure zone pressure control shall be of the pilot type, municipal grade, with stainless steel trim. The available water supply shall be analyzed on the basis of flow test data resultant of a proper hydrant flow test performed on the closest effective hydrant, performed in accordance with NFPA 291, during the design phase. All systems shall be designed a minimum of 10 percent below the water flow curve, but not less than a 34 kPa allowance for future demands on the supply main and to account for flow test accuracy. The engineer shall evaluate water supply source conditions at the time of flow test and make appropriate adjustment in calculations as required to account for seasonal system capacity fluctuations and similar conditions.

In the early design stages, a water supply distribution approach should be developed that meets all program requirements of the facility. Consideration should be given to the use of three different distribution systems to service domestic potable, industrial nonpotable, and mechanical systems. A laboratory reverse osmosis (RO) water system with local polishing equipment is frequently a fourth system and will be discussed hereinafter. Fire protection systems shall always be isolated via a separate feed from all other water systems. Comprehensive life-cycle costing that includes the installed and maintenance cost of backflow prevention devices should be performed to justify the design approach taken.

The three-system distribution approach has the items in Table H.3.2 connected to each system:

Table H.3.2 Three-System Distribution Approach

Domestic Potable Water	Industrial Nonpotable Water	Mechanical Systems
Toilet rooms	Lab/process sinks	Mechanical equipment
Shower facilities	Fume hoods	Autoclaves
Shower facilities	Biosafety cabinets	Hose bibs
Kitchen/pantry	Autoclaves	Process cooling water
Eyewash/drench showers (new and existing)	User equipment	Wall hydrants
Water coolers	Cage/rack washer	
Animal drinking water (w/BFP)	Glassware washers	
Janitor sinks	Hose stations	
Service sinks	Ice machine (lab use only)	
Patient rooms		
Treatment areas		
Laundry equipment		

All laboratory water fittings should be equipped with vacuum breakers in addition to a backflow preventer installed on main. Smaller building projects, general use facilities, and renovation projects may not require the three-system distribution approach and shall be designed accordingly.

It is always preferable to install emergency eyewash and emergency shower fixtures only on the building potable water system, as mandated by code and ANSI standards. However, the engineer must take steps to prevent the stagnation of these systems that can occur from infrequent use. An independent loop, generally 50 mm in size, should be provided for each lab or lab floor as required within a building wing and should include an automatic purge sequence actuated by a timer or the building automation system. The piping loop shall be arranged to minimize the length of dead legs to individual fixtures, and the loop shall be set to fully purge once per week. Where necessary, a serpentine pipe arrangement may be provided. The piping loop shall be constructed only of copper piping materials.

In some buildings, the mechanical water system may not need to be extended throughout the entire facility. In such cases, hose bibs and wall hydrants may be connected to the domestic water system, when the hose bib or hydrant incorporates proper backflow protection devices. In the event of mechanical water usage only in remote locations within the building, mechanical equipment may connect to properly sized building domestic water piping when isolated from the potable water system with appropriate backflow preventers

H.3.2.1 Pipe Sizing: Water piping systems shall be designed for minimal pressure drop and low velocity to limit noise generation and erosion corrosion. Pipe mains shall be designed for the maximum calculated flow at the design stage and to provide a 20 percent allowance for future expansion. The system distribution design shall utilize appropriate fixture unit values, with the cold water system mains, risers, and major branches sized on the basis of flushometer system curves. Hot water systems shall be sized on the basis of flush tank curves. Special demands shall be added directly to the calculated flow requirements, without diversity. Where a minor cold water branch line or runout serves only fixtures such as sinks, lavatories, and so on (no flushometers or high-use volume outlets on the line), the line may be sized on the basis of flush tank curves, providing it is still connected to a main line that is sized for flushometer and the complete required hydraulic design criteria are met, including velocity and pressure loss limitations. No building combined water service shall be less than 200 mm. With the exception of tempered water to multiple low-flow lavatory faucets served by a common thermostatic valve, a 50 mm supply shall not serve more than one fixture. Water pipe sizing shall generally conform to the requirements in Table H.3.2.1 below.

Table H.3.2.1 Pipe Sizing

Type	Sizing Parameters
Copper hot and cold water pipe	1.8 m/s and 2.4 m per 30 m head loss maximum for mains, 1.8 m/s and 3.6 m per 30 m for branches.
High-temperature hot water, over 62 °C	1.2 m/s and 2.4 m per 30 m
Hot water recirculation	1.2 m/s and 2.4 m per 30 m
Softened water	1.2 m/s and 2.4 m per 30 m

The incoming water service shall be sized to incorporate the criteria of plumbing demand flow rate at a maximum velocity of 2.4 m/s, and total plumbing water demand plus fire system water demand at a maximum velocity of 4.9 m/s. The C-Factor used for the incoming water service calculations shall not exceed 120. Fire department hose stream allowances are added at the point where they occur, and plumbing design calculation requirements should be appropriately coordinated with the fire protection engineer.

The flow rate of the maximum design quantity of emergency showers and eyewashes shall be included in sizing of water system piping and equipment based on an appropriate quantity of emergency fixtures as compared to the actual quantity of fixtures, developed with input of the user. Emergency eyewash and emergency shower demand flow rate need not be added to the plumbing water demand for purposes of sizing the combined incoming water service when the incoming water service sizing includes all other plumbing and fire water demand.

The design demand of the largest, most demanding zone of lawn irrigation (or maximum flow of zones operating at one time) shall be included in the design calculations as plumbing demand. Likewise, any constant flow mechanical equipment or miscellaneous demands shall be included.

The engineer shall consider the unique demands and applications of plumbing systems at the NIH, when sizing systems using Hunter's Curve methods and determining fixture units. Because of the size, application, and equipment used in NIH facilities, the engineer should thoroughly consider application of sizing methodologies to avoid drastic undersizing or oversizing.

H.3.2.2 Domestic Potable Cold Water: Domestic cold water should be connected to all general-use-type fixtures. Domestic cold water supplying drinking water, food processes, ice machines, and so on with water intended for human consumption must be protected from backflow from other systems in strict compliance with code requirements.

H.3.2.3 Domestic Potable Hot Water: Potable hot water is generated from the potable cold-water source using semi-instantaneous-type steam water heaters in most cases. Packaged electric or gas-fired heaters may be employed for small applications. Large storage tanks should be avoided because of the potential for bacterial growth. Water heaters should utilize a control arrangement listed for use in domestic hot water applications, which ensures accuracy over the entire flow range to within ±4 degrees. The preferred control valve for steam modulation is of the pneumatically actuated type. The engineer should consider the application of 1/3-2/3 control valves for central hot water production equipment. Double wall heaters shall be specified for potable water system applications. Heaters should generally be sized such that full demand may be met with any unit out of service. Steam supplies to the heaters are generally sized for full demand plus 20 percent allowance for future growth. The plumbing engineer shall consider the potential for *Legionella* in all large hot water distribution systems and shall select the most appropriate system in consultation with the NIH.

For most buildings at the NIH, hot water shall be heated to a temperature of 62 °C for distribution to kitchens and utility fixtures. The water shall be tempered down to 51 °C for general distribution with master thermostatic valves. Booster heaters at the kitchen or dishwasher shall provide 82 °C water for dishwasher final rinse locally. Undercounter-type dishwashers for break rooms and similar areas are provided with water supplies of not less than 60 °C for washing purposes. Hot water for commercial laundry purposes should generally be provided separately from the building system. Thermostatic type shower valves shall be selected, except that pressure-balance shower valves may be utilized where over-temperature protection is provided at the master mixing valve station as described below.

In the case of large facilities of multiple pressure zones, hot water may be generated and distributed at 62 °C, and local thermostatic valves shall be utilized at each pressure zone to reduce distribution temperature to 51 °C prior to reaching general fixture outlets. Thermostatic-type shower valves shall be selected, except that

pressure-balance shower valves shall be accepted where over-temperature protection is provided at the master mixing valve as described below.

For clinical facilities housing nonambulatory patients at the NIH, two design methods shall be permitted, and each shall be evaluated during the preliminary design phase:

1. Separate hot water heaters shall be provided for food service and utility applications, consisting of hot water generated and distributed at 62 °C and boosted locally for dishwasher final rinse. A second complete hot water system to serve the patient areas shall be provided, with generation and distribution temperature of 46 °C. Shower faucets shall be of the thermostatic type. The patient system shall be provided with copper-silver ionization treatment equipment and appropriate monitoring.

2. For systems not provided with copper-silver ionization, hot water shall be generated and distributed at 62 °C. Hot water shall be tempered at the local pressure zone down to 46 °C. Over-temperature protection shall be provided downstream of each master mixing valve, as described below. Shower valve selection may be either the thermostatic or pressure-balance type.

Hot Water System Over-Temperature Protection: Protecting building occupants and patients from dangers of scalding is of primary importance at the NIH. However, as it becomes increasingly necessary to increase hot water production temperatures to minimize bacterial growth such as *Legionella*, the risk of scalding increases. Thermostatic mixing stations are the preferred method of temperature control prior to patient distribution and shower facilities; however, any mechanical device is prone to suffer failure or maladjustment. In addition, improper balancing and piping arrangements can cause temperature increases beyond the design operating temperature. Unless otherwise indicated above, fail-safe over-temperature protection shall be provided downstream of master mixing valve stations that serve nonthermostatic-type shower faucets or provide hot water supply to nonambulatory patient areas, anytime water is produced over 51 °C. The over-temperature device shall consist of a temperature transducer, solenoid valve, and alarm signal to BAS. The over-temperature protection device shall be arranged to isolate a single mixing valve assembly and alarm an over-temperature condition. A minimum of two thermostatic high-low systems shall be provided, each with its own over-temperature protection and each capable of maintaining at least 80 percent of the design peak flow at the design pressure drop, so as to ensure continued supply of hot water in

the event an over-temperature condition activates shutdown of a single mixing valve assembly. Each sensing probe, outlet check valve, and the piping design at the mixing valve station shall be properly arranged to prevent actuation of both valves in the event of failure of only one device. All mixing valve assemblies shall be properly sized to effect proper temperature control under conditions of minimum flow.

Legionella Control Methods: Appropriate control measures for *Legionella* shall include consideration of copper-silver ionization equipment. Where utilized, copper-silver ionization treatment need not be provided with redundancy. The residual efficacy of copper-silver treatment has been shown to last for months after shutdown, thus affording ample time for any necessary maintenance.

While copper-silver ionization treatment will not generally be considered necessary for laboratory facilities where plumbing systems are properly designed, clinical facilities pose a higher risk due to the nature of occupants of the facility. It should be recognized that while *Legionella* is always a concern in water distribution systems, special consideration is given where the system is likely to be used by the elderly, those with respiratory ailments, and those with compromised immune systems. Aerosolization of water at showerheads is of special concern in such facilities.

Alternative control methods are generally not considered advantageous where it is determined that *Legionella* precautions are warranted. Chlorinization and UV sterilization methods are undesirable because of ineffectiveness against biofilm and sediment formation in piping systems that harbor and shield the bacteria. Effective chlorinization levels also severely increase piping corrosion. As *Legionella* thrive at temperatures below 57 °C, temperatures necessary to effect proper sterilization pose risk of scalding to building occupants and can be of only limited effect because of uncirculated portions of the system, sediment, and biofilm.

The A/E designs piping systems to minimize uncirculated hot water branches and should avoid the use of natural rubber gaskets, seals, and components, which often serve as nutrient to the bacteria. Cold water systems should be kept cold and away from heat sources, and large water storage tanks, which promote stagnation, should generally be avoided. Copper is the preferred piping material where feasible.

Temperature Control Adjustment: Limit stops and controls on showers and faucets shall be adjusted to limit the maximum hot water temperature to 43 °C at patient showers, and 49 °C maximum hot water temperature shall be provided at general

sinks. Water at 60 °C shall be provided to serve kitchen areas, sinks, or where otherwise required for proper use and operation. Hand sinks in kitchens shall be provided with local thermostatic valves below the fixture to limit hot water to 49 °C, or provide tempered water at 39 °C for sensor-actuated faucets. Thermostatic protection shall be provided and set for a maximum of 38 °C for faucets and 40 °C for showers in children's wards or areas likely to serve children.

Limit stops at lavatory faucets in public toilet rooms must limit maximum hot water temperature to 43 °C. Where automatic faucets or wrist blade faucets are utilized, a local thermostatic valve may be provided.

H.3.2.4 Domestic and Industrial Hot Water Systems Recirculation: Recirculating systems are designed specifically for each application to maintain the required hot water system temperature. The required recirculation rate is calculated for each loop and sized to offset system heat losses. The A/E should indicate the required flow rates for each circuit on the design drawings. Rule-of-thumb recirculation system sizing is undesirable, as system sizing is often inaccurate and results in a waste of energy or inadequate flow. It is preferable to calculate heat loss on the basis of system operating temperature, ambient temperature, and insulation value. For most interior building installations, the engineer should consider the use of an 18 °C ambient temperature condition in sizing calculations. A parallel hot water return should generally be provided alongside hot water supply mains and risers. Each hot water supply branch should be recirculated back to the hot water return and fitted with an appropriate balancing device, as required to maintain hot water to fixtures within the recommended time criteria as outlined by ASPE. In general, circulated hot water lines should not exceed 7.6 m in developed length. The engineer should consider the effect of large diameter branch takeoffs from mains serving low-flow volume fixture outlets. The outlet flow rate of the fixture must be considered when evaluating how close to the fixture the recirculation loop may terminate.

Serpentine-type hot water distribution, or the arrangement of hot water recirculation in a single supply loop with the return taken only at the end of the fixture supply loop, is undesirable, as these systems do not offer flexibility for renovations or fixture additions. By providing a parallel or centrally located hot water return, each supply branch may be recirculated independently, and additions and renovations may effectively be connected to the common return without disrupting building function. Hot water return rate for each riser should be carried by a balancing station at the top of the riser where the supply riser loops back to the return riser. In this way, the

hot water return on each floor need only be sized for the flow rate required to serve that floor, and the renovation of an area of the building is less likely to affect other areas.

Improper adjustment of hot water balancing valves can quickly throw an entire hot water system off balance. To help minimize these risks, the main hot water return from each floor should be provided with a “floor balancing station,” even where local circuits are individually balanced. A thermometer should be included at the end of each floor’s hot water return connection to the riser. Automatic balancing valves are generally undesirable due to inflexibility for changes in system flow rates that can be required during a renovation or revision in design.

In general, hot water supply to kitchens and cagewash areas should be sized for an approximate 5 °F temperature differential. General building areas should be sized for a 7 °F differential, except that higher differentials (up to 15°) may be used where justified by the specific application. A/Es should be cognizant of the required pressure differential to properly adjust balancing valves. In general, at least 0.06 L/s is required with a 15 mm pipe size. Engineers may consider reduced size balancing valves on larger diameter returns, where justified by the required flow rate and provided within acceptable velocity limitations.

Legionella provisions are not generally required with industrial hot water systems. Hot water is generally produced at 51 °C and directly distributed. In some cases, 62 °C distribution is desired because of laboratory equipment operation requirements. Over-temperature shutdown protection is not required in industrial hot water systems. Similarly, master thermostatic mixing stations are generally not required, unless hot water is from a source above 62 °C. Animal research facility cagewash is generally provided with independent water heaters, served from the industrial cold water system.

H.3.2.5 Industrial Nonpotable Water: System features may be similar in many respects to the domestic systems, but the two must be totally isolated. All laboratory, animal research facility, and process equipment and fixtures should be connected to the industrial water system. Separate cold, hot, and recirculating water mains and water heaters, tempering valves, and so on shall be provided.

Industrial water system sizing is driven by user requirements, which are normally difficult to define. The A/E shall establish through extensive consultation with

researchers the design criteria for each type of space so that the utility services are delivered in sufficient quantity and pressure to meet current and future requirements. Design criteria shall be documented and approved early in the design stages.

H.3.2.6 Mechanical Water: The mechanical water system is limited to a cold water source that provides makeup for building HVAC systems, backup for cooling water systems, routine maintenance cleaning, and watering. Sizing is based on initial or quick-fill requirements and design flows for backup conditions.

Hose bibs shall be provided within the building equipment room for cleaning and within planters for watering. Wall or yard hydrants shall be provided outside the building to accommodate landscape watering, pavement/sidewalk cleaning, and loading dock cleanup.

H.3.2.7 General Water Distribution: General water systems distribution should consist of a double-fed horizontal loop, with separate risers serving each end of the loop. Large facilities consisting of multiple building wings are provided with independent fully sized risers for each building wing, except that the redundant riser may serve multiple wings where beneficial and located in a common area. Systems are designed to permit bidirectional flow, with valving and thrust restraints designed to function properly with flow in either direction as might occur during isolation of a water service or riser.

Services to each floor of a building wing are connected to respective supply risers, independent of other floors, to minimize potential disruptions during service and future renovations.

Shock absorbers are provided at equipment with solenoid valves and quick-closing valves, and at other potential water hammer sources. Air chambers should not be permitted in lieu of manufactured water hammer arrestors, as such devices are prone to stagnation and quickly lose their air charge.

Mixing valves (including devices located at fixtures), which present a constant open path for flow of hot and cold cross-flow, can provide numerous problems in any large water system. It is necessary that wherever these devices are required, whether of the thermostatic type or simple mechanical mixers, check valves must always be provided to prevent cross-flow. The design engineer should be careful to specify durable mixing valves, which utilize only check devices constructed of brass or

stainless steel components. Mechanical mixing valves below lavatories can be especially problematic when care is not taken in the specification of the product. Many of these devices utilize frail plastic or rubber seals, which quickly fail. In such cases, the provision of secondary in-line check valves should be considered. While single-control faucets do not generally require check valves because they are not generally open for extended duration and when in use are usually at the terminal end of an open system, shower faucets, therapy tubs, and hose stations should always be provided with swing check valves or integral checks on both the hot water and cold water supply inlets.

The A/E should avoid locating cold water pipes immediately adjacent to steam lines and external heat sources. It is important that cold water systems not be permitted to warm, not only to avoid potential for bacterial growth, but also to ensure adequacy for the user.

Particular attention must be given to proper dielectric protection between differing metals. The use of dielectric flanges and appropriate waterways is preferred. Brass components should not be used as the sole isolating means between copper and iron piping systems.

Provision of adequate valving is of the utmost importance at the NIH. Valves should be provided in such a manner as to facilitate maintenance with minimal disruption and to isolate systems for renovations and unexpected emergencies. It is well recognized that one of the single greatest reasons for loss of operation of a facility after a catastrophic disaster is water damage and loss of water supply attributable to inadequate valving. Valves should be provided at the base of each riser, at each riser connection, at branch piping to fixture groups, and at fixtures and equipment requiring maintenance. Each floor distribution loop should be provided with sectionalizing valves, such that a fixture branch or portion of the loop may be shut down without disrupting the service to the entire floor or major portion of the supply loop. Valves should be arranged to permit isolation of specific areas without affecting operation of adjacent spaces. All valves should be arranged in an accessible manner. Where valves are located above ceilings, thorough coordination of piping services shall be required to ensure proper access for valve operation. Drains should be provided at the base of all risers and should be furnished with a ball valve, NPT threads, and a removable cap. For riser sizes 50 mm and smaller, a 20 mm hose valve may be provided with a cap but must include a vacuum breaker if serving a potable water system.

The engineer must avoid routing piping concealed above ceilings or burying it under slabs below major electrical or data communications equipment areas. Piping should not be located above panel boards or switches, including the required service areas for this equipment.

Provision of pressure gauges at floor takeoffs from major risers assists NIH maintenance with systems troubleshooting.

H.4 Sanitary and Waste System

Sanitary, waste, and vent systems shall meet the requirements of WSSC. Each plumbing fixture or drain shall be trapped and vented in accordance with code requirements. Vent systems serving plumbing systems are of the conventional through-the-roof type. Mechanical vent devices, stack aerator and de-aerator systems, and other nonconventional systems are not utilized. The sizing and pitch of drainage piping shall be per code and the requirements described in this section.

For general sanitary drainage applications, drain piping can be cast-iron hub and spigot for underground piping and hubless cast iron for above-ground piping. For laboratories intended for research in biology and chemistry or other research where concentrated acids or bases may be accidentally or improperly discharged into the drainage system, or for laboratories and cage wash facilities in which chemicals will be used, chemical-resistant piping and vent material should be considered. Drains receiving high-purity water discharge, such as lab sinks adjacent to water polishers, and drains at dialysis and pure water production equipment shall be of corrosion-resistant materials. Piping, materials, and joint methods shall comply with Table F.6. Such drain systems shall empty in neutralization systems prior to their discharge into the public sewer. The neutralization system shall be adequate to provide the proper pH discharge in accordance with WSSC discharge regulations. Vent piping material shall be as specified in Table F.6 in General Design Guidelines, Section: Mechanical. Vent piping serving drains that are made of corrosion-resistant materials selected for kitchens and similar applications may be sanitary vent piping materials as indicated in Table F.6 in General Design Guidelines, Section: Mechanical. Vent piping serving oil interceptors and similar combustible systems shall be approved metallic materials only. While pH treatment shall not be automatically provided for all facilities, the engineer must consider not only discharge regulations of WSSC from the entire NIH campus but also the need to protect the longevity of NIH private sewer collection mains and lateral infrastructure.

Laboratory acid, animal research facility, or other special waste and vent systems shall be separate from the general use sanitary system. Grease waste systems should be routed through an appropriate grease interceptor, prior to connecting to the sanitary sewer. The effluent from the buildings shall meet WSSC requirements. Effluent with the following basic characteristics shall be excluded from the sanitary sewer system:

- Unmetered water such as air-conditioning condensate, stormwater, ground water, etc. except as allowed per the code
- Any liquid or vapor having a temperature higher than 60 °C
- Any water or waste containing grease or oil or other substance that will solidify or become viscous at temperatures between 0 °C and 60 °C
- Any waters or wastes having a pH lower than 5.5 or higher than 9.0, or having any other corrosive property capable of causing damage or hazard to structures, equipment, or personnel of the interceptor, other sewage-handling and transporting facilities, or other treatment works

The public and private onsite sanitary sewer systems shall be protected against the potential discharge of grease and oil originating from food-handling and related establishments.

H.4.1 General Drainage Design Considerations: Sanitary waste systems should be designed to maintain a minimum velocity of 0.61 m/s, and 0.91 m/s where possible. Special attention is given to the design of sanitary waste systems serving low-consumption water closets as well as systems transporting wastes that increase potential for pipeline stoppages. Systems should be hydraulically designed to minimize potential for stoppages and backflow of wastes or suds and to ensure provisions for maintenance. Horizontal waste branches should generally not be sloped less than 2 percent and often require slopes in the range of 3 percent, to aid in solid waste transport. Excessive slopes beyond 5 percent and less than 45 degrees are generally undesirable because of the potential for liquids to run off, leaving solids behind to accumulate in piping. Slopes of 1 percent and less should generally be avoided in piping sizes 150 mm and less. The A/E should also recognize the negative effects caused by oversizing or undersizing of horizontal waste piping systems. Drains and traps serving floor drains, floor sinks, and janitor service sinks should not be less than 75 mm diameter, regardless of anticipated usage. Individual showers and tubs should be provided with 50 mm diameter traps and waste. Floor drains and floor sinks in kitchens should be provided with drains

and traps, which are 75 mm diameter, except that 100 mm diameter outlets should be used for the grease waste system. The use of horizontal waste piping less than 50 mm should generally be limited to trap arms serving lavatories and similar fixtures. The A/E should consider arranging fixture connections to provide “trail flows” to enhance drain line carry.

Waste piping systems should be designed and installed in a direct manner, with minimal horizontal offsets, to aid in the efficient transport of wastes. Piping mains located above ceilings should generally parallel the building construction and should generally not transverse building spaces diagonally. Long-radius fittings should be specified for horizontal-to-horizontal and vertical-to-horizontal direction changes. Double wyes should be avoided in the horizontal position, as it is not possible to maintain uniform slope in both directions and opposing branch inlets can result in separation of solids from the waste stream. Sanitary tee fittings should not be installed on their side or on their back as a waste fitting or to serve as a connection of a vent to a waste pipe because of the potential for stoppage. Sanitary crosses should be avoided in drainage systems. Specially manufactured double-fixture fittings should be specified for back-to-back or side-by-side fixtures discharging to the same vertical waste. The engineer should specify that piping be installed in proper alignment, with attention to joint quality, square cutting of piping, and proper insertion of piping into fitting sockets. Connections of individually vented fixture branches to horizontal mains should be through rolling offsets at a 45 degree position above the horizontal centerline, to minimize disruption to waste and air flows and minimize negative effects on solids transport. Such connection methods are noted on drawings or in specifications.

With the exception of stacked major toilet rooms, waste and vent stack locations and horizontal distribution of piping should be independent for each building wing to minimize potential disruption during future renovations. Vertical waste stacks that transverse multiple stories should not be placed directly behind fixtures, but rather in dedicated permanent utility shafts and appropriate building columns. The A/E should always consider the potential for any one floor to be renovated in the future without causing excessive disruption on adjacent floors or necessitating future vertical stack offsets. The engineer must avoid routing piping in ceilings above or burying it under slabs below major electrical or data communications equipment areas. Piping should not be located above panel boards or switches, including the required service areas for this equipment. The engineer should consider potential disruption, which could result if the need to access lines for repair or renovation were to be required.

Vertical stacks and vents should be located at permanent chases and building columns rather than in partitions. Every attempt should be made to design stacks in a straight vertical configuration and to utilize offsets of not greater than 45 degrees from vertical where possible. Waste and vent piping stacks that transverse multiple floors of the building should not be located in interior portions. These create significant issues during future renovations and often result in excessive offsets, the need for relief venting, and excessive disruption to adjacent spaces.

The routing of waste piping above food service areas, surgery areas, and similar areas of special health concern is particularly undesirable and should be avoided as much as possible. However, where installation is unavoidable, specific safeguards should be provided to maintain sanitation for these areas. The use of fixtures with waste discharge above the floor is especially desirable, as well as the use of double-contained waste piping as indicated in Table F.6 in General Design Guidelines, Section: Mechanical. Drain pans, heavy-duty couplings, and similar items should not be considered equivalent to the safety provided by a leak-tight double-contained waste system over critical areas.

Where possible, branch lines serving food service areas should connect to the building drain independently of other areas of the building. This reduces potential for waste stoppages in main lines to back up into sanitary kitchen areas. Independent grease waste systems should be provided as described below.

Vent systems should slope upwards toward the roof terminal, and dry vents should not offset horizontally below the flood level rim of the highest fixture on the floor connected to the system, and generally not less than 965 mm above the floor. This helps to ensure proper circulation in the vent system and minimizes potential for blocked vents or backflow of waste into vent systems and the resulting septic line conditions. Vents should not be located within 7.6 m of any air intake or window, or in such proximity to any building opening or occupied area to be infiltrated by sewer gas or vapors. Vents should be adequately separated from sources of positive or negative pressure, fans, and so on to maintain atmospheric pressure within the venting system. Interceptors are designed to prevent air locking and sometimes require an independent local vent, acid, or sanitary vent, based on the application and design.

Careful consideration given to the arrangement of cleanouts during system design can greatly aid in increasing sanitation. Opening of cleanouts serving plugged waste

lines, as well as the drain cleaning process itself, often results in unsanitary conditions caused by splattering and spilling wastes. Thoughtful consideration during the system design can help the NIH achieve increased building sanitation and reduce maintenance burden. For example, by providing two-way directional cleanouts at the exterior of the building, many main sewage stoppages can be cleared without even entering the facility. A separate entry to permit directed rodding upstream or downstream of flow should always be provided to permit control of the cleaning process. Such cleanouts should also be considered at other locations where beneficial to permit stoppages to be cleared without entering critical sanitary areas of the facility. Two-way cleanouts should not be provided in lieu of cleanouts at the upstream end of horizontal mains, but rather as a supplement to enhance the system. In many cases, horizontal piping in ceilings can be served by a wall cleanout located in a bathroom or similar readily washable area that discharges to the horizontal main. This can be a great advantage to the NIH, as the opening of a plugged water-filled waste line above finished ceilings is generally undesirable. Cleanout locations in biological waste systems must be carefully considered to avoid compromising the containment barrier. Cleanouts shall be provided as required by code, including at the base of waste stacks, and should also be provided as required to serve upstream ends of horizontal drains. The removal of a fixture such as water closet or urinal is an undesirable method of clearing drains and should not be considered equivalent to provision of adequate cleanouts. Full-size cleanouts should be provided for all waste lines up to 150 mm in diameter, and not less than 150 mm diameter for sizes above 150 mm. Wall cleanouts should be specified with appropriate plugs, and tapping of plugs directly into the waste or vent stack must be discouraged because of the potential for stoppages and exfiltration of sewer gas. The numerous piping systems at the NIH can often make it difficult or time consuming for facility personnel to locate proper cleanouts to service systems. Each floor cleanout cover should be stamped to indicate the system served. Laboratory and acid waste is designated “AW.” Sanitary waste is designated “SAN.” Storm drainage is designated “SD” or “STORM.” Grease waste is designated “GW.” The A/E recognizes that provision of adequate cleanouts is merely providing access for clearing stoppages and does not supersede thoughtful system design.

The engineer should carefully consider pipe material selections serving autoclaves and high-temperature wastes. Materials such as borosilicate glass and high-silicon iron should be utilized, rather than plastic piping materials. Where waste is non-corrosive, cast iron with hubless, caulked, or compression gaskets may be specified. Normal autoclave waste is not corrosive and may be routed to either the sanitary or

the laboratory waste system. However, where autoclaves include a high-purity water rinse, the connection should always be to the lab waste system, because of the corrosive nature of high-purity water. Careful consideration should be given to the specification of joint connections between floor sinks and floor drains and the selected piping material, and to the potential for expansion and contraction. Some piping materials, such as high-silicon iron, are not of iron-pipe-size external diameter and often require special connections to drains and floor sinks. Where serving autoclaves, a flanged mechanical joint adapter with a Teflon flange gasket connecting to a flanged stainless steel floor sink outlet is often the most appropriate way to address material transition and potential high-temperature waste.

It is especially important that the engineer specify proper backfill and excavation methods. Piping that loses proper slope or alignment because of improper bedding and backfill not only increases potential for stoppages but also can result in leakage underground and broken lines. The quality of the underground system design layout and installation often sets precedence for the durability and maintenance requirements of the entire system.

H.4.1.1 Gravity Drainage and Backflow of Waste: Drainage systems should be designed to flow by gravity wherever possible. The use of pumping systems should be avoided, except where absolutely necessary. Where pumped systems are required, equipment is of the duplex type, each capable of discharging 100 percent of the incoming peak flow in the event of a pump failure. Building areas that are sufficiently elevated above the sewer to not require discharge through a pumping system should be routed independently to discharge by gravity.

The plumbing engineer should arrange plumbing systems such that a stoppage in the exterior sewer will not result in sewage backflow into the building, but rather will be relieved outside the building by manhole covers. Backwater valves should be provided outside the building for any drainage main that serves fixtures or equipment whose flood level rim is not at least 2 286 mm above the elevation of the manhole cover serving the system, or above the next upstream manhole. In order to protect lower level fixtures from serving as a relief point for upper level fixtures in the event of a building drain stoppage, and also to permit gravity drainage without resistance of the backwater valve, all drains with flood level rim elevations above the above reference point shall not be combined with lower level mains upstream of the backwater valve. The backwater valve shall be located at the connection with the manhole, or with similar accessible means, to permit access for sewer rodding, or

other service. Sufficient venting shall be provided to serve the building sewer either through stacks that do not discharge through the backwater valve or by provision of a relief vent. The use of individual backwater valves is an undesirable practice because of restrictions in the inlet capacity and potential for fouling.

H.4.1.2. Indirect Waste: Indirect waste connections are provided for all plumbing fixtures or equipment that is of public health concern. Food preparation, dishwashing, and warewashing equipment, autoclaves, ice machines, and similar equipment discharge with an appropriate air gap to an approved indirect waste receptor. An air break may be utilized for items such as photo equipment and nonpotable equipment discharge, where an indirect connection is required, but a full air gap is not needed.

In general, stainless steel floor sinks are the indirect receptor of choice and should be selected for appropriate capacity and with the proper part grate design to eliminate splashing. An internal dome strainer or sediment bucket should always be provided. Stainless steel receptors provide enhanced cleanliness and corrosion resistance and are not susceptible to the chipping of enameling common to enameled cast iron, which often results from foot and wheel traffic, as well as during cleaning and replacement of sediment buckets. However, cast-iron floor sinks are well suited for installation in mechanical rooms and similar unfinished areas. Floor drains with funnel tops may be utilized for limited flow applications, such as from ice machines. Floor drains and floor sinks should always be installed with their top grate flush to 0.31 mm below the finished floor, with the finished floor slightly tapered to drain toward the receptor. The installation of floor sinks with rims installed above the floor is an undesirable practice that conflicts with the intended design of the fixture. Unsanitary conditions are created by unfinished surfaces and the ledge created when such devices are installed with rims above the floor. In addition, water, waste, and filth often accumulate under such conditions and can be difficult to clean. The only time waste receptors should be installed with rims above the floor is where specifically necessary to preclude floor drainage from entering the system, such as where a receptor is installed to direct clear water waste to the storm system. Indirect waste should generally not terminate at other plumbing fixtures, including janitor mop sinks, but rather to the appropriate waste receptor. Routing of indirect waste to janitor service sinks can result in flooding and water damage in the event a mop or bucket is left inside the sink blocking the fixture drain. While indirect waste from lab equipment sometimes drips into lab sinks, indirect waste must never terminate over

culinary plumbing fixtures or similar applications where use or sanitation is impinged in any manner.

The use of hub drains and standpipe receptors is generally undesirable in finished areas because of the potential for trash and debris to enter the drainage system, as well as their unsanitary nature. The interior of these devices is not readily cleanable, and projections above the floor present both sanitation and safety hazards. Such devices, however, may be appropriate in certain mechanical room applications, as well as when connected to wall waste outlet boxes. In no case will any standpipe receptor be less than 50 mm in diameter.

Indirect waste receptors must always be installed in readily accessible spaces and must not be located in toilet rooms, casework, closets, or concealed spaces. In locating floor sinks and other indirect waste receptors, the A/E considers the potential for a waste line stoppage to result in overflow at the fixture and ensures the location permits cleanup and is not likely to cause damage to the building. The location must permit removal and cleaning of the sediment bucket or dome strainer and cleaning and mechanical rodding of the device in the event of a stoppage. Waste receptors of sufficient depth should be selected to prevent splashing and accommodate peak discharge conditions. Food waste disposers and similar equipment shall not be permitted to discharge through indirect waste receptors, but rather must be directly connected to the sanitary drainage system. As with other drainage systems, the A/E should be careful to specify floor sink and floor drain outlet connections that are compatible with the selected grease waste piping material.

The use of indirect waste piping less than 25 mm in diameter should be avoided for air-conditioning condensate and food service applications, and this should be appropriately coordinated with food service consultants. Indirect waste lines less than 25 mm diameter are extremely difficult to maintain and frequently plug from sediment buildup. Plumbing connections to food service equipment should be included in plumbing documentation, after coordination with the food service consultant. The A/E must carefully evaluate food service equipment drawings and equipment installation requirements and should not rely on directions of food service consultants alone to ensure a code-compliant, well-designed system.

H.4.2 Laboratory Waste: The design engineer should carefully evaluate sizing of laboratory waste systems. Many items of equipment do not directly correspond to

flow rates and values of common Hunter's Curve fixture unit tables, as the tables were generally based around flow discharge characteristics of domestic plumbing fixtures and water closets. Cage and tunnel washers and similar equipment can generate particularly high peak flows and often produce suds-laden wastes. Diligence should be provided to validate system sizing for proper operation and for consideration of waste stack arrangement, segregation of wastes, and appropriate relief venting to prevent backflow.

In many cases in existing buildings at the NIH, horizontal waste piping must be offset excessively in walls during renovations to permit distribution in walls without disrupting floors below. The need for adequate cleanouts and sufficient pipe slope is especially important in such cases to facilitate and minimize maintenance.

The A/E should be careful to specify floor sink and floor drain outlet connection methods that are compatible with the selected lab waste piping material and system application. Often materials are specified with incompatible outlets, resulting in excessive delays and improper connections.

Laboratory waste should generally be provided in accordance with the general drainage design considerations above. However, in lieu of installation of cleanouts at every 90 degree horizontal change of direction, cleanouts may be provided at the upstream ends of horizontal branches, and at every 135 degree aggregate horizontal change of direction in the waste piping, with the maximum distance between cleanouts not to exceed 30.48 m.

The A/E should be sure to specify mechanical joint traps under lab sinks and fume hoods to permit removal for maintenance. Borosilicate glass piping is not utilized directly connected to darkrooms because of the potential for light transfer. It is also not utilized for vent penetrations through the roof.

pH treatment systems are not automatically installed at all laboratories, but rather are considered after analysis of the research process. Where pH adjustment systems are utilized, the A/E will consider the type of effluent to be treated. Treatment systems relying on limestone or marble chips are ineffective for alkaline waste streams and must be protected from solids in the waste stream. Solids tend to coat the neutralizing media and therefore render the system inactive. Even where solids interceptors are provided, the cleaning and disposal of such solids are subject to strict disposal guidelines, require extensive maintenance, and as such an

application of such systems should be carefully evaluated. For these reasons, passive-type systems are not generally recommended for facilities with cagewash or slurry or solids in the waste stream.

An active neutralization system that utilizes sulphuric acid or carbon dioxide, and sodium hydroxide, the engineer should evaluate whether the batch-type, or continuous flow-through, system is desirable. Waste streams with solid matter are better suited to the batch-type process, and the system should be especially designed to handle and flush all solids. Lab waste treatment systems should be carefully sized to the system demand. Most lab waste streams are effectively treated in a very short time, and thus excessive retention times are generally not required when using active systems. All systems must be designed to allow continuous operation during service, and therefore pH monitors and similar controls should not be located inside the tank. The engineer should specify quality pH monitors and components. Systems should utilize sufficiently sophisticated controls to match chemical injection to the influent requirements and influent and effluent characteristics. Continuous flow-through systems should include controls to permit limited retention in the event of a spike in the pH of the influent stream. Batch-type systems should default to continuous flow-through mode in the event a batch tank is removed for service. Constant-feed chemical injection systems are not acceptable. The A/E must carefully coordinate utility requirements for peak and normal flow rates of pH treatment systems with the civil engineer/site infrastructure.

H.4.3 Grease Waste: Dedicated grease waste systems should serve commercial food service areas of the facility, with venting and cleanout provisions as indicated above for sanitary waste systems. The grease waste system should be independent of other waste systems and should generally route grease waste to a properly designed exterior grease interceptor, prior to discharge to the sanitary sewer. All food service fixtures and equipment that provide a likely point of introduction of greasy wastes are directed to the grease waste system. Pot sinks, kitchen area floor drains and trench drains serving food service equipment (such as soup kettles etc.), the wash compartment of commercial dishwashers, hood wash, and similar connections are all directed to the grease waste system. Mop sinks, toilet rooms, food waste disposers, vegetable prep sinks, ice machines, and similar fixtures that generate sanitary wastes, excessive solid matter, or cold water wastes shall not discharge to the grease waste system. For large commercial dishwashers, it is often advantageous to route the final rinse compartment drain to the sanitary system by providing a separate floor sink. Water above 60 °C should generally not be routed

through the grease interceptor. The A/E should work with the food service equipment specifier to coordinate separation of the final rinse compartment drain for routing to a separate floor sink or to ensure that an appropriate backflow-protected waste water cooling device is included in the dishwasher specification at the final rinse cycle, to limit waste water discharge to 60 °C.

The application of point-of-use grease traps is generally undesirable, because of the need for continuous maintenance and the unsanitary conditions that occur during servicing. These devices generally have limits to capacity and are inappropriate for use in serving an entire kitchen. However, for limited applications, such as where a single-wash sink is provided as part of a limited remote area, these devices can be beneficial. Grease traps should not be located in the food preparation areas of kitchens or other areas of public health concern. The application of grease recovery devices is sometimes advantageous; however, as with the application of grease traps, the A/E shall carefully consider the needs of the entire kitchen, floor drains, and floor sinks, which often contribute significantly to grease waste load and cannot be appropriately connected to this type of fixture.

The A/E must recognize the excessive potential for stoppages in the grease waste system and design carefully to both minimize stoppages and permit maintenance. The drainage design should produce a minimum velocity of 0.91 m/s, and 1.2 m/s where possible. Adequate cleanouts and direct pipe routing with minimal horizontal offsets are desirable. As with sanitary piping, the use of two 45 degree ells is often preferred to 90 degree horizontal directional changes. It is desirable to prevent the solidification of grease in the piping system, and therefore ice machine waste and cold condensate should never be routed to the grease waste system. It is always desirable to locate the grease interceptor as close as possible to the kitchen; however, the interceptor must be located exterior of the building and in an area accessible to the pump truck. Generally, interceptors should be located not more than 15-23 m from a location where the pump truck is planned to be during the cleaning process, and preferably as close as possible. The location of the grease interceptor is coordinated during preliminary design phases and should generally be in a service area, away from the public. In cases where the grease interceptor must unavoidably be excessively remote from the kitchen, the A/E should consider the application of industrial-grade electric heat tracing and insulation to the grease waste piping. In cases where the piping must be installed below ground, the heat tracing must be located in a stainless steel conduit, with sufficient pull boxes/junction boxes and eyelets to permit replacement. The A/E must also carefully consider proper

protection of the piping and conduit from corrosion, and generally Teflon spacers and poured-in-place corrosion-inhibiting insulation materials are effective. Because high waste line velocities are desirable to enhance waste transport, the grease interceptor inlet and system design must be carefully designed to reduce velocities and provide sufficient holding period for separation and eliminate short-circuiting. Grease interceptors should be sized to provide sufficient retention based on the peak inflow rate, velocity, and types of influent to be treated. A minimum of two compartments is desirable. Generally, a minimum 30 minute retention time is appropriate. Grease interceptors shall not require cleaning more than once per month. Two-way directional cleanouts should be provided at both the inlet and outlet of grease interceptors. The sanitary vent downstream of the interceptor should connect directly to the vertical cleanout riser with a wye-type fitting to minimize potential for stoppage of the vent. The tank vent and sanitary vent should not be combined until at least 965 mm above the finished floor and should be fitted with cleanouts. Interceptors at the NIH are provided with internal ladders with nonslip rungs.

H.4.3.1 Trap Seal Maintenance: Floor drains, floor sinks, and indirect waste receptors often provide a path for sewer gas to enter the building as a result of evaporation of trap seals due to infrequent use. The A/E shall carefully consider the potential for trap seal evaporation and provide automatic trap seal primers to replenish trap seals where necessary. Only electric-type, time clock-actuated trap primers may be utilized. Non-electric-type pressure drop trap primers have proven unreliable and often malfunction from common pipeline debris or cycle excessively, resulting in excessive maintenance, water waste, and sewer gas infiltration. Providing a faucet near an indirect waste receptor is not considered an acceptable means of ensuring trap seal maintenance because of the constant manual intervention required. Floor sinks serving plumbing fixtures generally do not require external trap seal maintenance; however, indirect waste receptors serving mechanical equipment should be carefully evaluated to ensure adequate flow. Floor drains in toilet rooms and mechanical rooms should always be provided with automatic trap seal maintenance.

H.4.4 Biowaste Systems: Careful consideration is applied to the design of bio-waste systems serving BSL-3 and BSL-4 facilities. The need for liquid waste decontamination systems, the type of system, consideration of vent filtration, deep seal traps, and selection of piping materials are just a few of the items the A/E must carefully evaluate. The A/E shall work with the designated safety officer during the design of the system and shall comply with NIH/CDC biosafety guidelines. Liquid

waste decontamination and HEPA filtration should be provided at all BSL-4 facilities and should be considered as appropriate at the BSL-3 level. Vent filtration may be provided at the BSL-3 level and above.

The A/E must thoroughly evaluate the selection of piping materials for biowaste systems. Appropriate options are indicated in Table F.6 and require careful analysis of chemicals that may enter the system and any potential drainage system sterilization method. Piping serving BSL-4 facilities shall be double-contained and include primary carrier leak monitoring.

Waste systems serving BSL-4 systems are independent systems and are not combined with other building areas. BSL-3 systems should similarly be independent of other areas. Separate waste and vent stacks are provided, and HEPA filtration is of the safe-change (bag-in/bag-out) duplex parallel type and includes hydrophobic filtration.

Fixture traps in BSL-3 and BSL-4 spaces are of the deep seal type, with trap seals not less than 125 mm deep. All drainage systems are designed to minimize stoppages, and waste system velocities of 0.91 m/s are desirable. Trap seals are to be maintained via an appropriate disinfectant chemical fill to prevent cross-contamination, and piping materials shall be thoroughly compatible with program disinfectants. All plumbing fixtures on the lab side of the airlock are routed to decontamination, including water closets and service sinks.

All liquid waste decontamination systems are of the duplex or triplex-type batch process, which permits full normal continued operation with one unit out of service. The sterilization means shall be thoroughly coordinated with the NIH safety officer and infection control designate of the NIH project manager. Generally systems are of the steam injection or jacketed steam tank type. Alternative chemical disinfection systems are sometimes utilized. Careful consideration is applied to ensure the system may be safely serviced in the event of a malfunction. Submerged coil-type heaters are not utilized because of risk of contamination during servicing. Sterilization is located on the upstream side of pH treatment and other mechanical equipment, within an appropriate containment barrier. A sampling station shall be provided at the building connection to the sanitary sewer.

Cup sinks, floor drains, and other commonly used drainage facilities are typically installed in a standard manner throughout many NIH buildings without having a

specific need or function. The installation of these devices creates a tremendous maintenance problem due to infiltration of sewer gas from evaporation of trap seals. The design engineer should work with the lab planner and architect to carefully evaluate the need for all such devices and ensure that there is a legitimate requirement for their installation. Installing devices in a generic fashion without purpose is not acceptable.

Photoprocessing equipment shall be provided with an approved silver recovery device adjacent to the equipment. Where not connected to the corrosion-resistant laboratory waste system, waste neutralization tanks must be provided adjacent to the equipment. Such equipment is sometimes provided by the users but must be fully integrated into the design.

Drainage lines from kitchens, animal holding facilities, equipment rooms, laundries, and other areas, which generate a great deal of debris, shall be pitched a minimum of 2 cm/m and desirably 4 cm/m. These lines must have adequate cleanout to facilitate rodding, and cleanouts must occur at each 90 degree change in direction.

Condensate drain lines shall also be sloped a minimum of 2 cm/m and shall be a minimum 25 mm in size. Cleanouts shall be installed at each 1.6 rad change in direction. Trap seals shall be equal to air-handling unit static pressure at the trap plus a minimum of 50 mm. Condensate line shall be sized according to the following table:

Table H.4.4 Condensate Line Sizing

Pipe Size (mm)	Maximum Cooling Load (W)
25	17 584
32	105 506
40	175 843
50	597 865
80	1 055 055
100	1 512 247

A horizontal distance of at least 1.5 m should be maintained between parallel underground drains and water lines. Building sanitary drain connections should be

limited to not less than 100 mm diameter within the building and 150 mm exiting the building.

Floor drains, as a minimum, are required in the following areas:

- Kitchen areas, including serving lines
- Mechanical equipment rooms
- Toilet rooms with two or more water closets
- Shower or tub room
- Janitor closets
- Service corridors
- Laundry rooms

Garbage-grinding disposers or pulpers should be provided in kitchens or dishwashers, pot and pan sinks, and other sinks as required. Discharge from garbage grinders should not be piped to grease interceptors.

H.4.5 Floor Drains in Animal Rooms: Floor drains should be provided in animal rooms only when specifically required by the *Guide for the Care and Use of Laboratory Animals*. In addition:

- Floor drains should be a minimum of 200 mm in diameter and be equipped with a minimum 100 mm water seal trap and sufficient means for clearing waste stoppages, including judicious placement of cleanouts. Where possible, two-way cleanouts outside the animal rooms potentially at the trap arm are more preferable than cleanouts located integral with the drain. Drain covers should be of the lockable stainless steel type.
- Deep seal traps and running traps shall not be used unless especially required by the proposed application.
- Cleanouts should be provided in the main drain line for proper maintenance.

Floor drains may not be essential in all animal rooms, particularly those housing rodents. Floors in such rooms can be maintained satisfactorily by wet vacuuming or mopping with appropriate disinfectants or cleaning compounds. If floor drains are used, the floor should be sloped and drain traps kept filled with water. To prevent high humidity, drainage must be adequate to allow rapid removal of water and drying of surfaces. Drainpipes serving holding rooms should be at least 100 mm in

diameter. The recommended minimum pitch of sloped floors is 20 mm/m. In heavy-use areas, such as dog kennels, rim flush and jetted drains with tops of at least 150 mm in diameter are recommended. Such drains should be acid-resistant enamel-coated cast iron or stainless steel. A disposal unit set in the floor is not a satisfactory solution. In-floor water closets, constructed of stainless steel with blowout flush action with rim wash and stainless steel bar grate tops, can be utilized. In the case of flush-rim drains and in-floor water closets, interior drain bodies shall be only funnel or round bowl shaped, which completely evacuate solids placed at any point in the receptor. Flat-bottomed or slightly tapered bottom drains are not acceptable. In-floor water closets shall maintain a visible trap seal and sufficiently scour the bowl with each flush. Where such devices are utilized, flushometers shall have hydraulic-type actuation, with a pushbutton located in the holding room and an automatic flush operated by programmable timer. All drainpipes should have short runs to the main drains, and, if not in use, they should be capped and sealed to prevent infiltration of sewer gases and other contaminants. Lockable drain covers are advisable for preventing the use of the drains for disposal of materials that should be cleaned up and removed by other means.

When flushing drains or flush devices are employed on drains, access to components should be maintained. Access becomes a major issue when slabs are on grade or when multiple animal rooms are stacked above each another.

Drain types should be reviewed with users for suitability in individual rooms. The grate design and strainer elements shall provide adequate rodent and insect protection without increasing maintenance on drains or causing frequent blockage.

H.4.6 Clinical Center Waste System: The system design for, but not limited to, interceptors, flush-rim drains, and garbage grinders must be in accordance with special requirements for health care facilities.

Interceptors should be provided when substances harmful or hazardous to the building drainage system, public server, or public sewage treatment plant are present in the waste, such as in cast rooms, radiology barium procedures, and blood analyzers. The interceptors shall be cast iron; barium interceptors shall be aluminum.

Flush-rim floor drains should be provided in autopsy and similar areas. Floor drains are required in the following areas:

- Autopsy
- Cystoscopy room at front of table
- Hydrotherapy areas
- The vicinity of large refrigerators (such as in blood banks) not equipped with evaporators
- Darkrooms (radiology) for equipment
- Sterilizer closets
- Cart wash
- Ambulance garage/shelter
- Ice machines

A separate drainage and vent system should be provided for both acid waste and nuclear waste systems. Vents should route through the roof and not connect to each other or the sanitary vent system.

Floor drains in the Clinical Center are generally constructed of stainless steel, except for mechanical rooms and similar areas. Drains in toilet rooms are enameled cast iron with stainless steel tops.

The A/E should avoid the placement of waste stacks directly at patient toilet rooms but, rather, locate stacks at permanent chases and building columns. Locating stacks at patient toilet rooms which transverse multiple floors can create excessive disruptions and significant design issues during future renovations of any single floor.

Waste systems are arranged such that clinical support functions (which are often located in the central portion of nursing units between patient corridors) are discharged to waste lines that are located either over corridors or over central support space as required. It is undesirable to have such lines cross above patient rooms to reach drainage stacks, as access to such lines for service or renovation can disrupt or prevent use of patient spaces. Placing waste lines above clinical spaces such as nutrition and similar clean areas should be avoided as much as practical. Where waste lines must be routed above patient rooms rather than at corridors, they should be located at an outboard or inboard side of the room, where they are unlikely to be located above any potential patient bed.

Waste systems must not be routed above critical care areas such as surgeries and critical care units unless completely unavoidable. Where such cases of piping above

critical care areas are absolutely necessary, the piping shall be double-contained with the secondary containment leak- and gas-tight to not less than 3 m waterhead.

Plumbing systems in the Clinical Center must be arranged in consideration of the utmost sanitation and best practices of the profession. Exposed piping should be minimized, and all penetrations must be properly sealed. Systems must be carefully designed to prevent stoppages and facilitate maintenance with absolute minimal disruptions.

H.4.7 Drainage System Testing: All portions of drainage and vent systems downstream of fixture traps shall be tested for not less than 4 hours, with a 3 m water head. Air testing is not utilized on plastic piping systems. Final testing after setting of fixture traps shall ensure traps are both water- and gas-tight to 25.4 mm water column. A water manometer test, peppermint test, or approved equivalent method may be specified.

H.4.8 Parking Garage Drainage: An independent garage drainage system is provided for garage drains below the top parking deck, which is thus not directly exposed to rainfall. Garage drains are of the dry-pan type (connected without traps) and connect to a common 150 mm collector line that discharges to an oil/sand interceptor located outside the parking garage. A 150 mm submerged inlet water trap seal is provided at the interceptor, a 450 mm water seal on the outlet, as well as a dedicated independent vapor vent, to preclude buildup of noxious fumes. A proper sanitary vent is provided at the interceptor discharge. Additional vents are provided as required by the size of the system. Vapor vents shall not connect with sanitary or other vent systems and shall be of only cast iron or galvanized steel construction. The provision of dry pan drains eliminates requirements for freeze protection of traps and prevents accumulation of oil or flammable liquids at trap seals. Vapor vents shall not be located in such proximity to any air intake, window or building opening, or persons to permit infiltration of sewer gas or vapors. An electrically actuated trap primer is provided to ensure continued maintenance of the interceptor trap seal. Garage drains are generally located at low points adjacent to ramp turnabout and at sufficient intervals to permit garage floor washdown and preclude water buildup. All drains in parking garages are provided with special duty class ductile iron bar grates, enhanced support flanges, and sediment buckets. Backwater protection is provided to protect parking garages where potential for flooding exists due to the elevation of the drains in relation to other points of relief, and where otherwise necessary to protect mechanical or electrical equipment rooms that may be located in the garage

from backflow of storm or sanitary sewers. Interceptors at the NIH are provided with internal ladders, with nonslip rungs.

The top deck of the parking garage exposed to rainfall shall be directed to the storm drainage system, independent of storm drainage serving occupied buildings. Trench drains are provided at the parking garage ramp entrances and exits as required to prevent water buildup. Heel-proof drains are provided at any stair landing exposed directly to rainfall from sides or above and shall be of not less than 75 mm diameter discharge pipe size.

H.5 Storm Drainage Systems

A separate drainage system should be provided for stormwater. The building storm drain should extend to a distance of 1.5 m outside the building and connect to the campus storm sewer system. Guidelines for storm sewer systems are included in General Design Guidelines, Section: Site/Civil.

The number of sizes of drains should be adequate to convey stormwater from areas being drained at the same rate as water is collected in those areas. At least two drainage points should be established for each roof or areaway drainage area.

A dedicated secondary emergency roof drainage overflow system shall be provided to serve flat roof areas, except where such roof areas are provided with appropriately sized overflow scuppers. The overflow drain system shall consist of overflow drains installed alongside each roof drain, with a weir 50 to 75 mm above the roof low point. The system shall be piped independently to discharge through downspout nozzles 300 mm above grade. A stainless steel rain cap shall be specified over the top of the overflow roof drain dome grate to prevent intrusion of rainfall during normal conditions, thus minimizing unnecessary spillage or potential staining of exterior wall surfaces. Overflow roof drains and the piping serving each individual overflow roof drain shall be the same size as the primary system. However, common horizontal and vertical mains and leaders serving multiple overflow roof drains shall be sized on the basis of the 100 year, 60 minute storm rainfall intensity rate of 81 mm/h. In no case shall common main piping be smaller than the size required by the largest overflow roof drain that is served (reduction of pipe size in the direction of gravity flow is not permitted). By designing the system in this manner, the NIH is assured of a system that can accommodate the design storm conditions of a single plugged roof drain or horizontal main, while still maintaining the cost-effective benefits of pipe

sizing to the lesser rainfall intensity of the 100 year, 60 minute storm. The system is also capable of supplementing the primary system in the event of extreme storm rainfall intensity. Overflow drainage system piping need not be sized for future expansion, as the system terminates independently above grade. Any future increase in roof area will generally accompany an increase in building footprint, at which time additional overflow drainage piping may be included in the system design to accommodate the new construction.

Sizing of both primary and secondary systems shall incorporate horizontal roof surfaces as well as an allowance for adjacent vertical areas that may drain onto the roof structure where applicable. In cases of a single vertical wall adjacent to a lower roof, an allowance of 50 percent of the vertical area above the roof shall be included in the design load for the lower roof area. In cases of two opposite walls of equal height, no additional vertical area will be added. In cases of two adjacent walls, 35 percent of the total wall areas above the lower roof shall be included in the design load. Where adjacent walls are of differing heights, similar appropriate allowances shall be included in the design.

The size of the building storm drain and its branches shall be based on the maximum projected area to be drained. Because of the critical nature of NIH facilities, the primary storm drain system shall be designed on the basis of the rainfall intensity rate of the 10 year, 5 minute storm, which corresponds to a rate of 178 mm/h. Building storm drain slopes shall provide a minimum velocity of 0.9 m/s to keep sediment and debris in suspension. Primary storm drain systems within buildings that are sized on the basis of this criterion need not include an additional 20 percent future capacity allowance, as the design criteria provide sufficiently for future expansion. However, underground storm sewers outside the building shall be sized to include a 20 percent future allowance for expansion. The maximum design velocity subsoil drainage is not a plumbing item and should be indicated on architectural and civil drawings. However, piping design from the low point of the subsoil drainage system to the stormwater building drain should be shown on the plumbing drawings. Outside building subsoil drain tile should not be drained to an interior sump pump. If a pump is required, it should be located outside the building. Areaway drains, rain leaders, downspouts, or other aboveground drainage points should not be connected to subsoil drains. An exterior sand trap shall be provided where subsoil drains connect to the storm drainage system. In addition, where subsoil drains connect to the storm drainage system without the use of pumps, an automatic backwater valve shall be provided at the sand trap to prevent reverse flow

of stormwater into the subsoil drains. The backwater valve is provided at the inlet of the subsoil drain to the sand trap to permit access to the device. The cover of all interceptors should be appropriately stamped to identify the interceptor type and system served. For example, “SD SAND TRAP” stamped into the cover manhole access to the interceptor provides the NIH with sufficient indication of the system served to assist with proper maintenance. Interceptors at the NIH are provided with internal ladders, with nonslip rungs.

A horizontal distance of at least 1.5 m shall be maintained between parallel underground drain and water lines. When stormwater vents are required, they should be piped independently of any sanitary vents.

In general, rainwater leaders and overflow drain leaders will be located in permanent shafts or at building columns. Vertical piping will be routed as straight as practical, with minimal offsets. An expansion joint or acceptable horizontal offset (swing joint) is provided at connections to roof and overflow drains to minimize potential for leakage from expansion and contraction. Main roof drain leaders shall not be located in interior partitions. The system design should avoid placement of horizontal piping above conference spaces, offices, electrical rooms, or other critical areas. Lower roof areas shall not be connected to rainwater leaders within 600 mm of a horizontal offset, and then only with wye-type fittings. Fittings specified for use in storm drainage systems shall be of the same long-radius type used in sanitary systems, because of the debris and sediment that often enter these piping systems. The top deck of parking garages that are exposed to rainfall shall be routed to the storm system, independent of the lower levels of parking garages that are routed to the sanitary system after passing through the oil/sand interceptor.

Only clear-water drainage will be connected to the storm drainage system. This shall preclude the discharge of treated potable water, chemically treated water, metered water, or any other solution that is not entirely suitable for discharge directly into the environment. Condensate from fuel-burning appliances shall discharge to sanitary waste only through corrosion-resistant materials. Water such as atmospheric condensate shall be directed to this system, such as condensate from air-handler units. However, as condenser coil-cleaning procedures utilize chemicals that should not be discharged into lakes and streams, a normally closed bypass connection to the sanitary drain system shall be provided. This shall consist of a diverter valve arrangement installed on the indirect waste from air-handler units, which shall waste separately to the sanitary drainage system through an indirect waste receptor. The

valve shall be identified with a tag that states “Normally closed valve. Open only for cleaning of coil. Close when complete.” The sanitary receptor shall be automatically primed to prevent intrusion of sewer gas, as required under paragraph H.4.

The waste discharge chart in Table H.5 shall be used to determine where various services are piped.

Table H.5 Waste Discharge

Type of Discharge	Storm Drain Discharge	Sanitary Drain Discharge
Air conditioners: water cooled	X	X
Air compressors: water cooled	X	X
Area well	X	
Bearing cooling water: reclaimed water on individual determination	X	X
Bearing cooling water: reclaimed water if chemically treated		X
Boiler blow-down basin		X
Floor drains		X
Condensation drains: air-handling unit, cooler coil, refrigerated equipment	X	
Cooling tower: untreated	X	X
Cooling tower: if treated, type of treatment chromates		X
Cooling water: industrial noncontact	X	X
Dies, tools, etc.: water cooled	X	X
Drinking fountain: nonrefrigerated		X
Drinking fountain: refrigerated, water cooled		X
Elevator pit drain: except hydraulically operated elevators		X
Fire system blow-down: automatic, if no additives are applied		X
Food display case: refrigerated		X
Grass areas	X	
Humidifiers: commercial	X	X
Humidifiers: residential	X	X

Type of Discharge	Storm Drain Discharge	Sanitary Drain Discharge
Ice machine drain: commercial, and industrial	X	X
Ice chest drain: ice cube	X	X
Loading docks: enclosed		X
Overflow from ponds: ornamental, utility; check for chemical treatment if any	X	X
Overflow from tanks and reservoirs: private water supply cistern, stock watering and industrial processing, if treated	X	X
Overflow from tanks and reservoirs: industrial process, if treated		X
Roof drainage	X	
Subsoil drainage	X	
Water-softener backwash: commercial, industrial, and residential		X
Welding equipment: water cooled	X	X

Note: The table may be used for discharge requirements for storm and sanitary waste. Design must include air gaps as necessary to prevent cross-connection between sanitary/storm systems and the water system.

H.5.1 Gravity Drainage and Backflow of Waste: Drainage systems should be designed to flow by gravity wherever possible. The use of pumping systems should be avoided, except where absolutely necessary. Where pumped systems are required, equipment shall be duplex type, each capable of handling 100 percent of the incoming flow. Building areas, which are sufficiently elevated above the storm drains, do not require discharge through a pumping system and should be routed independently to discharge by gravity.

The A/E should arrange plumbing systems such that a stoppage in the exterior storm sewer will not result in stormwater backflow into stairwell area drains, subgrade parking areas, or similar low-level stormwater inlets that are not fully exterior of the building. The design should ensure that stormwater would be relieved outside the building through manhole covers, catch basins, or other exterior storm-drainage inlets.

Where such drains are not located at least 228 mm above the elevation of the stormwater relief point, automatic backwater valves shall be provided. Roof drains and other drains with flood level rim elevations above the above reference point shall not discharge through the backwater valve. The backwater valve shall be located at the connection with the manhole, or with similar accessible means, to permit access for sewer rodding or other service.

H.5.2 Drain and Overflow System Testing: All portions of storm drainage systems (except foundation and under-slab subsoil drains) shall be tested for not less than 4 hours, with a 3 m waterhead. Air testing is not utilized on plastic piping systems.

H.6 Laboratory Safety Equipment

All laboratory safety equipment shall meet the requirements of OSHA safety and health standards. Safety equipment may have a local alarm indication, but control monitoring is not required. Water tempering is not required.

A laboratory emergency shower piping system shall be provided so that a safety shower can be installed in each laboratory and at other locations deemed necessary by the NIH Division of Safety. Location of emergency shower and eyewash shall be determined in consultation with the NIH Division of Safety.

The emergency shower piping system shall be served from potable water systems. The use of nonpotable water systems to serve emergency fixtures is not a code-compliant practice and should be strongly discouraged. In existing facilities, potable water should be extended from the nearest adequately sized riser to serve emergency fixtures. New facilities should include potable water distribution to serve emergency fixtures as required.

Where cold water systems are utilized to feed the emergency fixtures, a 50 mm water main is generally installed with a minimum of a 25 mm branch line to serve each emergency shower, and a minimum 15 mm branch to each emergency eyewash. The A/E should carefully consider the location and routing of the potable water line to minimize dead-legs and potential for stagnation and fouling. Where possible, the water main should serve at least one commonly used potable water fixture, such as a break room sink or similar application, to ensure turnover of the water supply. In cases where the water supply is likely to become stagnant, the engineer should consider the application of a time clock-actuated line purge, which

shall generally discharge to a floor sink on a weekly basis. The engineer may consider serpentine pipe distribution methods; however, piping shall serve only fixtures on the same floor, and serpentine distribution need not include vertical runouts down fixture partitions.

The showerhead should be of the on-off type with valves of continued operation upon initial activation. When an emergency shower is activated, the valve should remain open until manually turned off.

For BSL-2 laboratories, emergency showers may be required based on specific program requirements for fume hoods or biosafety cabinets. When showers are required. they may be located within the laboratory or in the pedestrian corridor adjacent to the laboratory. When showers are located within the laboratory, they shall be located above the egress door leading to the pedestrian corridor and away from desks and equipment. When they are located in the corridor, they must be within 10 seconds' reach by the lab occupants.

When a BSL-3 suite contains a fume hood, an emergency shower must be provided within the containment area of the suite, preferably within the anteroom area. When a BSL-3 suite does not contain a fume hood, the emergency shower must be within 10 seconds' reach of the lab occupants. In this case, the emergency shower can be located within the containment area or in the corridor adjacent to the laboratory, provided the lab occupants can reach it within 10 seconds.

Where demineralization systems require local regeneration, "safety" showers and an eyewash station should be provided in the area.

Ground fault protection shall be provided for all electrical outlets adjacent to emergency showers as required by the *National Electrical Code*.

Emergency shower and eyewash stations should be located on the dirty side of cagewash facilities and within medical/pathological waste areas, hazardous material storage rooms, and chemical storage rooms.

Eyewash facilities should be provided in at least one sink in each laboratory, as well as in other areas where chemicals may be used, or as recommended by the NIH Division of Safety. Eyewash units should be a fixed type, capable of irrigating both eyes at the same time. Upon actuation, the eyewash should stay in the "on" position

until manually deactivated. Eyewash facilities should be installed with pressure regulators as recommended by the Division of Safety to prevent injury due to water pressure.

Hand-held double-headed drench hoses may be used integral with lab sinks but are not considered a substitute for ANSI-approved and -required equipment. Where drench hose-type emergency fixtures are utilized, the A/E shall ensure that proper backflow protection is provided. Generally, a spill-proof vacuum breaker is required, as a hose could become submersed in a lab sink and thus subject the water system to a backsiphonage cross-connection. Atmospheric-type vacuum breakers are generally not appropriate for these installations because of the location of the actuation valve.

H.7 Compressed-Gas Systems

H.7.1 Medical Gas Systems: Medical gas systems may consist of a cylinder supply system with a reserve supply or a bulk supply system without a reserve supply. Systems should consist of a primary source and a secondary supply that will operate automatically to supply the pipeline if the primary supply becomes exhausted. The secondary supply should consist of at least 3 days' average supply unless the local resupply situation dictates a greater secondary supply amount.

Master and local area alarm panels to monitor line pressures and the status of supply equipment should be provided. Monitoring should be done via pressure switches (no mercury switches allowed) or contacts located downstream of the manifold. Two master alarm panels should be provided for each medical gas supply system, wired in parallel to a single sensor for each condition. Audible and noncancellable visual signals should be provided for main-line pressures and for changeover status of manifold systems. Master alarm panels should be placed in two separate locations: the office or work area of the individual responsible for maintenance of the system, and at a second location monitored 24 hours per day such as a telephone switchboard or security office.

All systems shall comply with the latest edition of NFPA Standard 99 and AIA Guidelines for Health Care Facilities. Bulk systems over 566 340 L shall comply with the latest edition of NFPA Standard 50 and AIA *Guidelines for Design and Construction of Hospital and Health Care Facilities*. Services for animals should be independent of medical gas systems. Connections of animal gasses to a Level 1

medical gas system is a violation of NFPA 99 and can compromise patient safety. All medical gas systems and alarms should be serviced by the emergency power system.

Only licensed plumbers or pipe fitters who are also currently certified as medical gas installers in accordance with the ANSI/ASSE Series 6010 Professional Qualification Standard for Medical Gas System Installers, by a qualified agency, shall install medical gas systems. Persons certified as medical gas inspectors shall inspect new installations. The quality of medical gas system brazing installed at the NIH shall be specified to be equivalent to the requirements of the Brazer performance qualification standard as modified by NFPA 99.

The installing medical gas contractor, prior to system verification, in accordance with NFPA 99, shall conduct initial testing of medical gas systems. The engineer shall specify systems verification to be provided independent of the construction contract by an independent third party. Persons currently qualified in accordance with the requirements of NFPA 99 and the ANSI/ASSE Series 6030 Professional Qualification Standards for Medical Gas Verifiers should provide medical gas verification. The verification procedure should include all steps outlined in NFPA 99 and the qualification standards.

Table H.7.1 depicts the outlet requirements for hospital gas systems. The piped systems should be sized so that at maximum demand the gas pressure at the outlet is not less than 34 kPa below the normal design pressure. Minimum pipe size for any service should be 15 mm. Consideration should be given to using a higher pressure than required with local reduction in the alarmed valve boxes for oxygen and medical air in facilities with long piping runs. The gas systems in Table H.7.1 should be considered.

Table H.7.1 Medical Gas Terminal Outlet Requirements

Functional Area	OX (1)	MV (1)	MA (1)	NO (1)	N (1)	DA (1)	OE (1)	PA (1)	Notes
Inpatient Bedrooms									
Private rooms	1	1	1						(2)
Isolation rooms	1	2	1						
Semiprivate rooms	1	1	1						(3)
Pediatric rooms	1	1	1						(3)

Functional Area	OX (1)	MV (1)	MA (1)	NO (1)	N (1)	DA (1)	OE (1)	PA (1)	Notes
Stepdown rooms	1	2	1						
Day hospital	1	1	1						
Intensive Care Rooms	2	4	2						(6)
Surgical Suite									
Operating rooms	4	7	2	2	2				(4)(5)
Patient prep/holding	1	1	1						(6)
Anesthesia work area	1	1	1	1					(4)
Induction room	1	1	1	1					(4)(6)
Recovery									
Intensive care									
Recovery	2	4	2						(6)
General recovery	1	3	1						(6)
Outpatient (ambulatory)									
Recovery	1	1	1						(6)
Cardiac catheterization	1	3	1	1					(6)(4)
Angiography	1	3	1	1					(4)
Cystoscopy/IVP room	1	3	1	1					(4)
Endoscopy room	1	3	1	1					
Protoscopy room	1	3	1	1					
Fracture/cast room	1	2	1	1	1				
EEG	1	1							
EKG	1	1							
Treadmill room	1	1							
Deep therapy linear									
Accelerator	1	1							
Deep therapy cobalt 60	1	1							
Computerized tomography	1	1							
Treatment Room									
Nursing station treatment/ exam rooms									
ICU treatment/exam room	1	1	1						
Clinic treatment rooms	2	4	1						
Clinic recovery rooms	1	1							
EENT Exam	1	1							
Allergy/Immunization									
Treatment room	1	1							

Functional Area	OX (1)	MV (1)	MA (1)	NO (1)	N (1)	DA (1)	OE (1)	PA (1)	Notes
Inhalation Therapy									
Therapy cubicle	1	1	1						
Equipment cleanup		1	1					1	(6)(8)
Equipment assembly	1	1	1						
Physical Therapy									
Hydrotherapy-extremity	1	1							
Hydrotherapy-lowboy	1	1	1						
Rehabilitation	1	1							
Pharmacy									
Compounding								1	
Central Material Service									
Equipment cleanup testing	1	1	1						(7)
Biomedical Equipment Repair									
Equipment Testing	1	1	1		1				(7)
Nuclear Medicine									
Scanning	1	1	1						
Pathology									
Autopsy	1								(9)
Dental									
Dental treatment rooms (DTRs General)						1	1		(4)(10)
Endodontic DTRs						1	1		(10)
Oral surgery DTRs	1	1		1	1	1	1		(4)(10)
Recovery	1	1							(11)

Table Notes:

1. OX = 345 kPa oxygen
   MV = medical vacuum, 475-625 mm Hg
   MA = medical air 345 kPa oil-free air with a dew point of 4 °C
   NO = 345 kPa nitrous oxide
   N = 1 103 kPa nitrogen
   DA = dental air, 586 kPa oil-free air with a relative humidity less than 40 percent
   OE = oral evacuation 7 L/s per station at 2 762 kg/m^2 of mercury
   PA = process air, non-oil-free air at 49 kPa

2. Exclude Psychiatry Unit rooms.
3. One medical air terminal unit per two beds where beds share a common wall, one oxygen and one medical vacuum unit per bed.
4. All inhalation anesthesia, anesthetizing locations in a hospital will have an anesthesia gas low-vacuum active evacuation system. DTRs with central oral evacuation systems may use the oral evacuation systems for nitrous oxide waste gas evacuation.
5. Each operating room will have overhead service columns, each of which will contain two oxygen, two medical vacuum, one medical air, one nitrous oxide, and one nitrogen terminal unit. Additional medical vacuum terminal units will be provided on three of the walls of the operating rooms.
6. The terminal unit grouping indicated will be per patient station/bed.
7. For equipment testing and calibration.
8. Special gases from remote manifolds.
9. Per workstation.
10. Each utility center requires one each DA and one each OE.
11. Each dental workstation will have one each counter-mounted gas and air cock.

Centrally piped systems will be furnished and installed in accordance with NFPA Standard 99. Piped systems will be provided with properly located and sufficient shutoff valves and local area alarms in accordance with NFPA Standard 99. Recommended mounting height for emergency shutoff valves is 1 650 mm.

Gas outlets in medical patient care areas should be the quick-disconnect type, except 1 379 kPa nitrogen, which shall be DISS type. Station outlets should bear the label of approval as an assembly under reexamination source of UL and be designed to provide the following features unless noted otherwise in this section or Table H.7.

- Conform to requirements of NFPA Standard 99.
- Preclude any mix of service and safety keyed to prevent accidental interchangeability of secondary equipment.
- Be capable of being flush mounted; self-sealing requiring no dust cover with quick coupling capability and equipped with an adjustable valve mechanism to compensate for mounting variations.
- Provide one-handed, single-thrust mounting and one-handed fingertip release of secondary equipment.
- Accept two-pronged connectors, each to its own function and both preventing twist and turn of the secondary equipment once connected.

H.7.2 Medical Air (MA): A separate, compressed-air system independent of the laboratory compressed air system should be provided and should contain oil-free air

compressors, desiccant air dryers, air filters, and line pressure controls. Air compressors and equipment shall be not less than duplex configuration and shall be in full accordance with the current edition of NFPA 99. Only desiccant-type dryers shall be utilized for medical air systems. Medical and dental air systems shall be equipped with a duplex purification package capable of removing particulates 0.01 micron and larger. For medical compressed air systems (air at patients' room outlets and operating room use), a pressure of 345 kPa gauge will be maintained. There should be 100 percent redundancy of this equipment to allow for maintenance work without necessitating shutdown of the system. The system design criteria should be for 100 percent of system peak load to remain upon failure of a pump.

MA systems should have continuous dew point monitors as required by NFPA Standard 99, duplex air dryers, and duplex storage tanks.

Medical compressed air should be tested as above, and in addition all piping shall be tested at 20 percent above normal line pressure for a 24 hour period. The only allowable pressure changes should be those caused by temperature variations.

Medical and dental air compressors should take their source of air from filtered outside atmosphere (air already filtered for use in operating room ventilating systems). Air should not contain contaminants in the form of particulate matter, odors, or other gases. The following pressures are required at the most remote outlet:

- MA General 345 kPa
- DA 586 kPa
- Special DA (SHDA) 1 034 kPa

Medical, laboratory, and dental air systems must be independent. Only desiccant-type dryers shall be utilized for medical air systems. MA and DA systems shall be equipped with a duplex purification package, capable of removing particulates 0.01 micron and larger.

Dental air compressors should be sized in the same manner as the oral evacuation turbines. The storage tank should be a minimum 12 times (in liters) the size of all individual air compressors (L/s).

H.7.3 Nitrous Oxide: Nitrous oxide should be supplied by a piped central system at a terminal unit pressure of 345 kPa in all hospital operating, cystoscopy, cardiac catheterization, angiography, and oral surgery rooms and other locations as required by program.

H.7.4 Nitrogen: Nitrogen may be required in some NIH facilities as a central system. This requirement must be verified with users on a project basis. Research-grade dry nitrogen should be supplied to laboratory modules, treatment rooms, operating rooms, and so on as required. Nitrogen should be a central piped system, with pressure-reducing valves and/or control cabinets provided in operating rooms and oral surgeries. For dental power use, 1 103 kPa gauge pressure should be provided. A liquid nitrogen storage tank, vaporizer, and associated controls should be located outside the building. Liquid nitrogen piping shall be of the static or dynamic vacuum jacketed type. For facilities with limited nitrogen requirements, the A/E should consider feeding the system from manifolded cylinders located in a central area or building cylinder closets. Manifolded cylinders with redundant components or cylinder backup and reserve alarm shall be provided to ensure an uninterrupted supply.

H.7.5 Carbon Dioxide: Carbon dioxide may be required in some NIH facilities as a central system. This requirement must be verified with users on a project basis. Carbon dioxide should be provided to areas as required. Carbon dioxide system distribution pressure shall generally be at 172 kPa. A liquid carbon dioxide storage tank, vaporizer, and associated controls should be located outside the building. For facilities with limited carbon dioxide requirements, the A/E should consider feeding the system from manifolded cylinders located in a central area or building cylinder closets. Central carbon dioxide systems must have redundant components or cylinder backup to ensure uninterrupted supply to incubators.

H.7.6 Special Gases (Cylinder Gases): Research and health care at the NIH have requirements for many different specialty gases, including helium, argon, hydrogen, oxygen, nitrogen, carbon dioxide, and various gas mixtures. Space should allow for the proper storage of full and empty gas cylinders, including separate storage areas for flammable and oxidizing gases. Cylinder restraints shall be provided in storage areas and local distribution closets and at points of use in the laboratories. Cylinder restraints shall be secured to the building structure. Toggle bolts and similar designs are not acceptable.

H.7.7 Patient Oxygen: Medical oxygen is provided for patient use as required by the NIH program. Systems are designed to maintain pressure at the use point between 345 and 379 kPa. Oxygen systems are sized to limit pressure drop across the system to not exceed 2 068 kPa. No oxygen branch or outlet connection line may be less than 15 mm. The minimum size of any main or riser shall be 20 mm. Where oxygen is required to serve animal research facility spaces, it shall be provided from a separate system.

H.7.8 Laboratory Air: The laboratory compressed air system should be designed utilizing the central plant compressed-air system as the source of compressed air. This air is delivered at a pressure of 827 kPa.

The compressed-air system should be designed to provide air at a pressure of 276 kPa and a flow of 0.47 L/s at every outlet station. Laboratory building diversity factors may be used if these can be assessed. The compressed-air risers should be at the delivered power plant pressure, with pressure-reducing valves located at the main floor takeoffs to deliver the necessary zone pressure conditions.

Higher pressure air and higher flow rates may be required for equipment usage. These requirements should be assessed on a case-by-case basis and should be provided by the use of pressure-reducing valves.

The laboratory compressed-air piping system should be tested at a minimum test pressure of 1 034 kPa with oil-free dry nitrogen or oil-free air. This pressure shall be maintained, and all joints examined for air leakage.

H.7.8.1 General Laboratory Air Distribution: Primary services to each floor of a building wing shall be connected to respective supply risers, independent of other floors or building wings.

Risers are provided so that labs may utilize either high-pressure or low-pressure distribution via local pressure-reducing valves as required. High-pressure distribution piping systems are sized to limit pressure drop to 10 percent of the system operating pressure. The 276 kPa lab air system is sized to limit pressure drop to 20.7 kPa at design demands. Velocities shall not exceed 1 219 m/min.

Provision of adequate valving is of the utmost importance at the NIH. Valves must be provided in such a manner as to facilitate maintenance with minimal disruption and

to isolate systems for renovations and unexpected emergencies. Valves shall be provided at the base of each riser, at each riser connection, at branch piping to each lab equipment group, and at equipment requiring maintenance. Each floor distribution loop shall be provided with sectionalizing valves such that a branch or portion of the loop may be shut down without disrupting the service to the entire floor or major portion of the supply loop. Valves shall be arranged to permit isolation of specific areas without affecting operation of adjacent spaces. All valves must be arranged in an accessible manner. Where valves are located above ceilings, thorough coordination of piping services shall be required to ensure proper access for valve operation.

H.7.9 Building Compressed Air Production (Nonmedical Use): Air for building processes (other than medical and dental air) are produced at the central plant and distributed to each building. This air is delivered at a pressure of 827 kPa and is distributed throughout the facility at the delivered central plant air pressure. The incoming plant air service is sized to supply 100 percent of the compressed air peak demand and shall include 20 percent capacity allowance for future expansion. For new buildings, a dedicated compressed air production system shall be installed as a backup to the central system and shall be capable of supplying 100 percent of the system peak demand with the plant air system completely out of service.

Production of quality compressed air is an expensive process from the standpoint of energy consumption and ongoing maintenance. Equipment that meets the peak demand profile is often oversized a significant portion of the day. The engineer shall select equipment capacity splits to appropriately match the demand profile of the building to minimize waste of compressed air. This will include the selection of a duplex, triplex, or quadraplex arrangement of smaller compressors, rather than a single large unit. The system shall be set to automatically supplement the incoming plant air supply via a normally closed valve, actuated by a pressure switch. All compressors shall include an automatic exerciser such that each compressor is activated not less than once per week. Local control systems with system operating status and alarm condition readout are provided at the equipment. A remote signal-to-building automation system is generally limited to a general fault alarm for each system source.

If in any case it is determined by the NIH that the plant air will be utilized as a backup supply to the building compressed air system rather than as the primary supply, the

building compressed air system shall be designed to maintain peak capacity by itself with any one compressor out of service.

The incoming plant air supply is connected to the building system upstream of duplex desiccant dryers and high-performance coalescing filtration equipment. In this manner, the building distribution system and delivered air quality are protected from any contamination that might occur during distribution from the central plant to the building, such as in the event of a break in a line, construction debris, or mechanical failure.

Central compressed air serving laboratory and building control systems is oil-free, filtered to remove hydrocarbons and particulates, and dried to a maximum pressure dew point of -12.2 °C. In no case will the dew point be less than -7.7 °C below the lowest temperature to which any portion of the system will be exposed. Air quality shall meet the requirements of the Quality Standard for Instrument Air, as published by the Instrument Society of America. Additional dehumidification and filtering are provided where higher quality air is required.

The A/E shall coordinate heat loads of compressor equipment with the mechanical engineer to ensure adequate ventilation and cooling of compressors. The use of liquid-cooled compressors supplied by the central process cooling water closed loop system should be considered.

H.7.9.1 Process Air: Process air serving door operators and similar devices need not be oil-free and is not part of the laboratory, medical, or dental air systems. Process air piping need not be cleaned for oxygen service.

H.8 Vacuum Systems

Each application should be evaluated for the type of substance or products being evacuated and for the appropriate application of equipment type. The exhaust from the piping systems should be discharged outdoors and remote from air intakes or other openings in the building and should be protected from the entry of insects or debris. To prevent premature wearing of the pump vanes because of backflow of condensate into oil sump, a drip pocket, at least 250 mm in length, full line size, and a ball valve should be installed at the exhaust port of each pump. Drip pockets are also required at the foot of exhaust risers. Particular consideration should be given to

the sizing of exhaust lines so as to minimize backpressure on the pump. The design engineer should specify a maximum acceptable noise level for the vacuum system.

H.8.1 Laboratory Vacuum (LV): The LV system should utilize two or more vacuum pumps and a receiver, except where an existing vacuum system is being connected. Pumps, whenever possible, should be of the single-stage, fully recirculating, liquid ring type. A float or level switch shall be provided to limit seal water makeup to only the flow actually required. Single stage rotary vane type may also be used but shall include a post-cycle purge and be constructed of materials suitable for laboratory chemicals. Prior to selection of vacuum pumps, the design engineer shall evaluate the substance being evacuated and compatibility of the system with any potential chemicals. The system design criteria should be for 100 percent of the system peak load to remain upon failure of any one pump. All pumps shall alternate in the appropriate lead-lag sequence and include a pump exerciser function. Vacuum receivers should have automatic drain traps to remove moisture from the system. Users shall be consulted to determine whether emergency power is required. Local control systems with system operating status and alarm condition readout are provided at the equipment. A remote signal-to-building automation system is generally limited to a general fault alarm for each system source.

The LV system should be capable of maintaining a vacuum of 6 561 kg/m^2 of mercury at the inlet terminal farthest from the central vacuum source, i.e., the vacuum pumps. If deeper vacuums are required, they should be generated locally with special vacuum pumps in the lab or lab support area. The system or pumps should be selected for an operational range of 7 587 to 8 287 kg/m^2. The control settings should be set to energize the pump at a vacuum of 7 597 kg/m^2 of mercury and to stop the lead pump at 8 633 kg/m^2 of mercury.

The system distribution and pump sizing shall be based on 0.235 standard L/s at each vacuum inlet terminal. Standard laboratory diversity factors may be used if they can be properly validated. Where demand curves are based on flows of 0.47 standard L/s rather than 0.235 L/s (such as the ASPE General Laboratory Use Demand Curves), the increased flows of the curves shall be utilized with their appropriate diversity factors for all but the first five inlets on any branch, at which point the first five inlets on each line are sized at 0.235 L/s without applying diversity. The pipe sizing shall be based on 1 381 kg/m^2 of mercury as the total piping system pressure drop from the farthest terminal. Before attaching the vacuum lines to the vacuum pumps, receivers, and alarm signaling system switches and gauges, each

section of the piping system shall be subject to a test pressure of 1 034 kPa gauge by means of oil-free, dry nitrogen or air. The test pressure should be maintained and each pipe joint inspected for leakage by use of soapy water or other suitable means.

A standing pressure test should be performed after installing the vacuum system, including station inlets, but before attaching the vacuum lines to the vacuum pumps, receivers, and alarm switches. The test should consist of subjecting the system to a pressure of 1 034 kPa gauge by means of oil-free, dry nitrogen or air. After allowance for temperature variation, the pressure at the end of 24 hours should be within 34 kPa gauge of the initial pressure.

For laboratories that are considered biohazard research areas (BSL-3 labs), a parallel HEPA filter system with safe change capability (such as bag-in/bag-out) shall be installed upstream of the vacuum pump in the line from the area. Filtration of air and disinfections of biohazardous materials shall be provided locally by each investigator as required. Lab personnel shall install filtration devices in a manner that will require maintenance when they become loaded. Bypass lines should not be installed. Each investigator should utilize disinfectant traps and filtration at each vacuum inlet. Systems serving BSL-3 labs should not be combined with other lab vacuum systems. Central building vacuum systems should not be utilized in BSL-4 labs. A biohazard warning sign shall be provided at vacuum source equipment from vacuum systems serving biohazard research areas.

H.8.1.1 General Lab Vacuum Distribution: Primary services to each floor of a building wing shall be connected to respective supply risers, independent of other floors or building wings. Runouts from horizontal piping serving drops to inlets shall be taken off above the centerline of the main or branch pipe and rise vertically at an angle of not less than 45 degrees from vertical. Provision of adequate valving is of the utmost importance at the NIH. Valves must be provided in such a manner as to facilitate maintenance with minimal disruption and to isolate systems for renovations and unexpected emergencies. Valves shall be provided at the base of each riser, at each riser connection, at branch piping to each lab equipment group, and at equipment requiring maintenance. Each floor distribution loop shall be provided with sectionalizing valves, such that a branch or portion of the loop may be shut down without disrupting the service to the entire floor or major portion of the supply loop. Valves shall be arranged to permit isolation of specific areas without affecting operation of adjacent spaces. All valves must be arranged in an accessible manner.

Where valves are located above ceilings, thorough coordination of piping services shall be required to ensure proper access for valve operation.

Laboratory vacuum shall exhaust to the outside in accordance with NFPA 99, a minimum of 6 100 mm from any building opening, door, or window.

H.8.2 Medical Vacuum (MV): MV is independent from LV systems and should be designed in accordance with NFPA Standard 99. The vacuum source should consist of two or more vacuum pumps that alternately or simultaneously on demand serve the vacuum system. The system design criteria should be for 100 percent of the system peak load to remain upon failure of a pump. MV will be used to evacuate wastes in surgery and patient rooms. Duplex vacuum pumps should be installed in these systems. MV will be used for evacuation in areas listed in Table H.7.1. The use of copper tubing, which is not cleaned for oxygen service, may be permitted for vacuum systems only where an acceptable plan has been provided by the contractor to the engineer and is accepted by the NIH as a variance to the guidelines. The plan must include offsite identification and marking of the tubing every 1 524 mm with white tape with black letter text indicating "FOR VACUUM USE ONLY," or a similar method such as pre-application of piping identification every 1 524 mm, to provide sufficient safeguard to prevent the use of the piping material for any other medical or high-purity system. Medical vacuum shall exhaust to the outside in accordance with NFPA 99, a minimum of 6 100 mm from any building opening, door, or window.

Two different pressures are required:

- Central Vacuum: 2 417-3 453 kg/m^2 of mercury
- Surgical Vacuum: 6 561-8 635 kg/m^2 of mercury

A liquid separator should be provided on the suction side of pumps that are part of central and dental vacuum systems. Multiple cylinder pumps may be used. At least two vacuum pumps should be installed in these systems. Vacuum requirements and pipe sizing should be determined in accordance with NFPA Standard 99 and based on the terminal units specified in Table H.7.1.

Vacuum station wall outlets should be provided with a bracket to accommodate a 2 qt bottle equipped with a float cutoff. Serrated shank adapters should be provided for 30 percent of the vacuum wall outlet stations. Master and local area alarms should be provided for MV systems. A master alarm with noncancellable visual

signals should indicate low levels in the main line and shall be located in a continuously monitored location. If one continuously monitored location is not available, a secondary master alarm should be installed where it is most likely to be seen or heard, such as a telephone switchboard or security office. All alarms should be energized by the essential electric system.

Area alarm systems should be provided in anesthetizing location areas and other life-support and critical care areas such as postanesthesia recovery, intensive care units, and coronary care units. Area alarms shall provide audible and noncancellable visual signals when pressure drops below 4 144 kg/m^2 and shall be located at nurses' stations or other suitable locations.

A biohazard warning sign shall be provided at each medical vacuum pump as follows:

"BIOHAZARD WARNING—MEDICAL SURGICAL VACUUM PIPING AND EQUIPMENT MAY BE CONTAMINATED WITH INFECTIOUS MATERIAL. PERSONAL PROTECTIVE EQUIPMENT AND UNIVERSAL SAFETY PRECAUTIONS SHALL BE EXERCISED WHEN SERVICING PIPING OR EQUIPMENT."

H.8.3 Oral Evacuation System: A central, high-volume oral evacuation (HVE) system will generally consist of the following:

- Two vacuum turbine units and controls
- A water-air separator at the dental unit and a central separator located near the turbine suction
- Surge control devices and silencers for turbines
- An alternator or two-way switch to alternate starting of vacuum turbine motors
- A piping system of corrosion-resistant material
- A low-voltage remote control system for system control and alarm

The oral evacuation system shall not be utilized as dental surgical vacuum. Dedicated dental surgical vacuum at pressures of 305-432 mm Hg shall be provided similar to those for medical vacuum systems where required.

The system should be capable of producing a vacuum of 2 762 kg/m^2 with a minimum airflow of 7 standard L/s at the remote aspirator tip, with such tip having a

10 mm opening. The oral evacuation system capacity will be designed with usage factors as follows:

Table H.8.3.a Usage Factors for Dental Treatment Rooms

Number of Dental Treatment Rooms (DTRs)	Usage Factor (%)
1-6	100
7-10	95
11-15	90
16-20	85

Based on the usage factor, each vacuum turbine should be sized to handle 60 percent of the calculated load. The vacuum turbines should be sequenced so that the second turbine will start upon demand. The piping system should be sized for maximum velocity of approximately 15 m/s and a minimum velocity of 10 m/s with no pipe size less than 40 mm in diameter, except that 20 mm diameter tubing should be used from the dental unit junction box to the main line. The pipe system should provide long radius bends and wye branches and will slope without low points to the separator. Vacuum relief valves will be provided at the end of each pipe run to ensure adequate transport velocity during periods of reduced usage. All values stated are based on standard conditions (21 °C and 101 kPa), and the performance rating should be compensated by project site. Cleanouts should be provided as part of the piping system. Operatory separators will be located as directed by the using service. Drains shall be provided to dispose of liquid waste from the separators.

Exhaustor inputs should be connected in parallel. Each input should be equipped with a mechanical antisurge valve for vacuum control. The equipment manufacturer should furnish documented certification of each turbo exhauster as to its ability to handle the design loads without exceeding the normal operational limits of the exhauster or drive motor. Ingestion gates and antisurge valves should be preset to maintain specified design requirements for airflow and vacuum levels. The system should incorporate one or several central separators as determined by the following criteria:

Table H.8.3.b Vacuum Size for Dental Treatment Rooms

Number of DTRs	Quantity	Size (L)
1-6	1	76
7-10	1	152
11-20	1	304

Dental vacuum shall be exhausted to the outside air and provided with biohazard warning signage as indicated above for medical vacuum systems.

H.8.4 Animal Vacuum: Where animal vacuum is required for animal surgical procedures, a separate dedicated vacuum system shall be provided. Animal surgical vacuum shall not be combined with patient medical vacuum, as this compromises patient safety. Vacuum systems for animal surgical procedures are designed utilizing equipment suitable for clinical surgical vacuum. A biowaste sign is provided at the vacuum equipment as indicated for clinical surgical vacuum systems. For limited applications, the engineer should consider the application of local vacuum systems. Building-wide central animal surgical vacuum is generally not required.

H.9 Natural Gas/Fuel Systems

Fuel gas piping for NIH buildings is usually limited to natural gas that is supplied through site distribution mains from a Washington Gas source. Propane may be used for remote buildings when life-cycle costing justifies its installation over natural gas. All gas piping, tanks, etc. shall be designed in accordance with NFPA Standard 54/ANSI Z-223.1, *National Fuel Gas Code*.

The natural gas piping system should be designed to provide 0.32 to 55.0 L/s at each laboratory outlet at a pressure of 1 370 Pa gauge. For equipment requiring gas, natural gas piping distributions systems at the NIH that serve laboratories shall be low-pressure systems. Welded medium pressure natural gas distribution systems of 13.78 to 34.47 kPa may be used to serve the inlet pressure regulator in food service and mechanical areas, where justified by the gas load, and installed in full compliance with NFPA 54 and WSSC requirements, including proper over-pressure protection. Gas distribution systems to food service areas should generally be separated from the laboratory gas distribution piping. For laboratories, the volume flow rate required should be determined from the manufacturer's input ratings. If

safely established, diversity may be used for the laboratory outlets, but equipment shall be considered at 100 percent use factor.

The design pressure loss in the gas piping system should be such that the supply pressure at any piece of equipment is greater than the minimum pressure required for proper equipment operation. A pressure drop of 75 Pa water pressure during periods of maximum flow is considered to be a reasonable design guide for low-pressure gas installations.

At the NIH, cast iron, copper, brass, or plastic pipe and fittings should not be used in natural gas systems. Black steel pipe with malleable fittings or other approved material in conformance with standards for metallic pipe, as set forth in Section 2.6.2 of NFPA Standard 54, shall be used. Shutoff valves shall be specifically listed for the appropriate natural or LP gas application and for use at the system operating pressure. Valves shall be leak-proof design, UL listed for fuel gas service where applicable, and of permanently lubricated design. Valves 65 mm and smaller shall be UL and AGA listed, ball type. Valves 80 to 100 mm shall be eccentric plug type. Valves 125 mm and larger shall be API 607 fire-safe ball type to ANSI Z21.15 or ASME B16.33 for fuel gas. All interior gas valves shall be actuated without requiring the use of tools.

Gas connections to commercial food service equipment shall be hard-piped for non-movable equipment and shall be provided with epoxy-coated stainless steel connectors that are especially designed for commercial food service applications and include a quick disconnect with integral shutoff, and a restraining device, wherever food service equipment is on wheels or intended to be moveable for cleaning.

Gas connections to laboratory equipment shall be hard-piped, and unions shall not be permitted in concealed, unventilated spaces, including above ceilings. The final gas connection below the ceiling to laboratory fume hoods may be made with ASTM A539 welded steel tubing specifically designed for fuel gas lines; however, compression fittings shall not be utilized at any point in a fuel gas system, and joints shall be permitted only at each end. Couplings used in natural gas systems shall include appropriate thread stops and proper NPT pipe thread taper. Factory-furnished couplings at the end of threaded steel pipes that protect pipe threads shall not be used in the piping system in lieu of proper fittings because of the high incidence of leakage at these joints.

Services to each floor of a building wing should be connected to respective supply risers, independent of other floors.

Provision of adequate valving is of the utmost importance at the NIH. Valves should be provided in such a manner as to facilitate maintenance with minimal disruption and to isolate systems for renovations and unexpected emergencies. Valves should be provided at the base of each riser, at each riser connection, at branch piping serving outlets in each laboratory, and at each item of equipment. Each floor distribution loop shall be provided with sectionalizing valves, such that a portion of the loop may be shut down without disrupting the service to the entire floor or major portion of the supply loop. Valves should be arranged to permit isolation of specific areas without affecting operation of adjacent spaces. All valves should be arranged in an accessible manner. Where valves are located above ceilings, thorough coordination of piping services should be required to ensure proper access for valve operation.

The engineer should avoid routing piping in ceilings above major electrical or data communications equipment areas, and other hazardous or critical areas. Piping should not be located above panel boards or switches, including the required service areas for this equipment.

Generally, gas piping should run exposed and should be graded 6 mm per 5 m to prevent traps. Horizontal lines shall grade to risers. Gas piping should not be run in tunnels, furred ceilings, or other confined spaces where gas might collect and create a serious hazard. Gas piping shall be tested with an air pressure of 420 kPa. This pressure shall not have a pressure drop differential during a minimum of a 4 hour test period, but not less than as required by NFPA 54 based on the total piping system volume. Proper procedures shall be included to isolate equipment from the test pressure in accordance with NFPA 54 procedures. Each gas piping joint, connection, valve, and source of potential leakage shall be tested. Only final connections to equipment may be tested with noncorrosive manufactured gas leak detector solution.

Green gas vents located within the building should be piped outside. Gas cocks or outlets should have 1/4-turn lever handles so that a quick visual observation can determine whether valves are open or closed. Each floor must have an isolation valve that is quickly accessible for emergency shutoff. Where gas systems to a floor fed by multiple risers or sources (such as the case with double-ended horizontal loop

distribution), a suitable emergency gas shut off device should be provided on the floor served in a wall box, which shall shut off the entire gas supply to the specific floor from both risers, at a single point upon actuation. An actuator should be located at both ends of the system, at the location as approved by the NIH fire marshal. The device shall be normally open and of the pneumatically or electrically operated stored-energy type to permit a minimum of two operations in the event of loss of air supply or power source. Once the actuator is activated to shut off gas, it should require manual intervention to re-open, such that safety conditions can be restored prior to reactivation.

H.10 Backflow Prevention (BFP)

BFP devices should be installed in strict compliance with WSSC plumbing regulations. BFP devices should conform with ASSE Standards as listed in the Code or be equivalent to AWWA and USC Standards. BFPs should be used to segregate water supply systems, i.e., domestic water from industrial nonpotable, mechanical, and fire protection systems. At the NIH, a minimum of a two-step backflow protection approach shall always be utilized to protect the potable water supply. Step one shall be “Isolation.” This approach consists of thorough analysis of each potential backflow hazard and the application of proper protection at the use point to prevent contamination of the supply system. The preferred method of isolation is always a proper air gap at the water supply outlet but may also consist of approved backflow preventers that are appropriately matched to the hazard level and specific application. Special attention shall be provided to devices and use application points with a high potential as a backflow hazard.

The second step in effective backflow protection shall consist of “Containment.” Backflow protection applied at this level shall be provided with the assumption that a complete individual system could be potentially contaminated, and the protection device selected must protect the upstream water supply. This generally consists of reduced-pressure principal backflow preventers, such as applied to the incoming water service, laboratory water supply, and so on.

Additional considerations in effecting backflow protection are also critical. The use of appropriate equipment and materials, proper design of supply systems for sufficient pressure and operation, and proper assessment of the potential hazard at each use point are necessary. It is also especially important that the engineer consider the value of proper identification and location of water supply systems. Systems that are

insufficiently labeled, and system designs that do not plan for the future or otherwise ensure the appropriate water supply system is available to serve all areas of the facility, often result in future cross-connections.

A thorough analysis should be performed to justify the approach taken to backflow prevention. The installation of each backflow preventer increases maintenance requirements for the facility, so application should be justified. The engineer should consider the annual maintenance and service requirements for testable devices and ensure proper testing and certification are provided after installation and prior to turning over any facility for use. It is important to realize that even though a laboratory water system must not serve potable water outlets, the system must still be properly protected to ensure a clean water supply. This often includes the use of reduced-pressure devices at certain laboratory equipment but does not automatically mean that a backflow preventer or reduced-pressure device is required at every outlet. For example, where a proper air gap is provided, additional protection is not generally required. Many items of equipment can be protected properly with a pressure or atmospheric-type vacuum breaker. Certain low-hazard applications may be provided with a dual-check valve, double-check valve, or double-check with intermediate atmospheric vent and devices that do not require annual testing. The engineer should always assess the hazard level, review the potential for backpressure versus backsiphonage, the planned location of the device, the application of valves upstream or downstream of the device, and other factors such as manufacturers' recommendations and USC, AWWA, ASSE, and code requirements as they apply to the degree of hazard and device application. Backflow preventers should always be located where they may be accessed for proper testing. Devices should not be located in concealed spaces, above ceilings, or where otherwise inaccessible or likely to be neglected. Backflow preventers should not be located in pits or where they are likely to become submerged. The engineer should specify that a log be provided to the NIH at the conclusion of a project indicating the exact location, type of device, and service function for each backflow preventer that requires annual testing (any device provided with test cocks, such as double-check assemblies, reduced-pressure principal devices, pressure vacuum breakers, etc.).

All backflow preventers should be provided with proper service clearances, and in addition, the engineer should ensure adequate drainage for devices as required. The engineer should consider the potential of some devices to leak or spill under normal operation and thus ensure installation in an appropriate location. In some cases, because of the quantity of water that could be discharged and required location of a

reduced-pressure principal device, an automatic shutoff and/or alarm signal to BAS should be provided, which activates upon a predetermined minimum flow rate of discharge through the relief valve. Where automatic shutoffs are employed, they should function independently for each device, so as to allow continued water supply in the event of a malfunction.

When a single water main enters a building from an outside WSSC distribution source, it should be equipped with BFP devices to protect the main from all building users, including domestic. Domestic potable water, industrial nonpotable water, mechanical, and fire protection water supplies should be independent of each other; these are taken from the main building supply and should be provided with BFP devices as specified below.

Main domestic water and industrial water piping supply systems serving the building should have two reduced-pressure double-check valve BFP devices installed in parallel for each piping system. This avoids interruptions to water service when maintenance or testing is required. One device can be shut off while the other is left in operation. All BFP devices should have isolation valves at the inlet and outlet for testing and servicing. A building structure with more than one source of outside water supply within the building should be required to have one reduced-pressure double-check valve BFP device at each industrial and domestic water supply serving the structure.

Fire protection supply piping should be equipped with a double-check valve to provide BFP, and it should be located downstream from the fire protection shutoff valve. Any isolation or shutoff valve in the main line leading to or branch providing water supply for the automatic sprinkler system should be OS and Y (outside stem and yoke) and be electrically supervised by the fire alarm system. The mechanical equipment water supply main should have a single, reduced-pressure double-check valve BFP device installed.

Care should be taken not to install reduced-pressure BFP devices in series with one another since they have a significant pressure drop. When the service main enters the building, each water system should tap the main in a parallel arrangement, thereby preventing the need for in-series BFP devices in most NIH facilities. However, in BSL-4 facilities, the laboratory water supply RPBP shall be installed downstream of the incoming domestic water service backflow preventers. A parallel arrangement of RPBPs should be provided, with each device sized appropriately to

minimize pressure drop. BSL-3 facilities may be installed in either manner, providing appropriate pressure drop consideration is included and the design is properly justified. Plumbing engineers should be sure to consider the peak pressure drop through BFP devices when designing distribution systems.

All laboratory faucet applications shall be equipped with ASSE 1001 vacuum breaker-type spouts, in addition to the main laboratory water supply backflow preventer at the source. Water system connections or outlets to individual plumbing, vacuum breakers serving fume hoods, and similar equipment should be located outside the equipment, and not less than 2 286 mm above the finished floor. No valve may be permitted downstream of an atmospheric vacuum breaker.

All low-point drains that are equipped with hose pattern threads and serve any potable water system should be provided with ASSE 1011 hose bib vacuum breakers and a hose cap.

Where a hose bib is provided near any sewage pump, lab waste treatment system, or liquid waste decontamination system, the hose bib should be provided with a reduced-pressure zone backflow preventer.

Any equipment or water supply outlet, which could introduce pathogens into the potable water supply, should be isolated from potable water with an air gap, vacuum breaker, or reduced-pressure principal device as appropriate for the hazard. The design engineer should provide special consideration to equipment and fixtures to be installed which are not normally classified as plumbing fixtures but could introduce a potential hazard.

Where bedpan washers are provided which utilize a hose, or any other equipment or device is utilized inside the hospital or research laboratory that is isolated from the water system by an atmospheric vacuum breaker, the vacuum breaker should be located in the room served, at a height of not less than 2 286 mm above the finished floor. Where bedpan washers are built into the flushometer discharge tailpiece, the flushometer should be selected and installed such that the vacuum breaker critical level is a minimum of 150 mm above the discharge head when in the full upright position.

In BSL-4 facilities, each water supply system should be isolated with not less than reduced-pressure zone type backflow preventers. The engineer should review the

application to determine the need for a break tank. In BSL-3 and BSL-4 facilities, the incoming domestic water service backflow preventer should always be installed ahead of the lab system backflow preventer; thus, a series arrangement should be provided. Potable water systems should not penetrate the BSL-4 containment barrier unless independently protected with a reduced-pressure zone device. Laboratory water systems serving BSL-4 laboratories should not serve other building areas.

Water supplies to morgues or similar areas of the facility should be protected with reduced-pressure principal backflow preventers installed outside the morgue, even where equipment is provided with backflow protection.

Bypass arrangements shall not be permitted around backflow preventers.

- Installation of an approved air gap (preferred method).
- Where it is not possible to provide a minimum air gap, equip the supply connection with an accessibly located BFP (atmospheric-type vacuum breaker) installed beyond the last control valve.
- For laboratory faucets with hose connections, through installation of an atmospheric-type vacuum breaker.

Backflow devices should be selected from the approved list available from the WSSC and installed as per the WSSC Plumbing Regulations. Application of backflow devices as listed in Table H.10 shall be subject to field verification of hazards and conditions.

Table H.10 Application of Backflow Prevention Devices

Standard Number	Device or Method	Type of Protection (BS = back-siphonage) (BP = back-pressure)	Hazard	Installation Dimensions and Position	Pressure Condition (I=Intermittent) (C=Continuous)	Comments	Use
ANSI A112. 2.1	Air gap	BS & BP	High	Twice effective opening - not less than 25 mm above flood level rim	C	See 404.4	Lavatory, sink, or bathtub spouts. Residential dishwasher (ASSE 1006) and clothes washers (ASSE 1007)
ASSE 1001	Pipe applied	BS	Low	150 mm above highest outlet Vertical position only	I		Goosenecks and appli-ances not subject to backpres-sure or continuous pressure
ASSE 1011	Hose bib vacuum breaker	BS	Low	Locked on hose bib threads At least 150 mm above grade	I	Freeze-proof type required	Hose bibs, hydrants, and sill cocks

Standard Number	Device or Method	Type of Protection (BS = back-siphonage) (BP = back-pressure)	Hazard	Installation Dimensions and Position	Pressure Condition (I=Intermittent) (C=Continuous)	Comments	Use
ASSE 1012	Dual-check valve with atmos-pheric vent	BS & BP	Low to Mod	Any position drain piped to floor (see 411.4.2b)	C	Air gap required on vent outlet Vent piped to suitable drain * See footnote.	Residential boilers, spas, hot tub, and swimming pool feed lines Food-processing equipment, photo lab equipment, sterilizers, commercial dishwashers, water-cooled HVAC Landscape hose bib Washdown racks Makeup water to heat pumps

Standard Number	Device or Method	Type of Protection (BS = back-siphonage) (BP = back-pressure)	Hazard	Installation Dimensions and Position	Pressure Condition (I=Intermittent) (C=Continuous)	Comments	Use
ASSE 1013	Reduced pressure zone backflow preven-ter	BS & BP	High	Inside building - 450 mm to 1 200 mm (centerline to floor) Outside building - 450 mm to 600 mm (centerline to floor), horizontal only	C	Valves per 404.3.3 Testing - annually (minimum) 404.3.8 Overhaul - 5 years (minimum) per 404.3.9 Drain per 404.3.8.b	Facilities per 404.3.5 Chemical tanks Chilled water Cooling towers Commercial boilers, swimming pools, spas Heat exchangers per 404.5 Hospital equipment Lawn irrigation (Type II) Solar systems per 404.5 Submerged coils Treatment plants Fire sprinkler (high hazard as deter-mined by Commission)

Standard Number	Device or Method	Type of Protection (BS = back-siphonage) (BP = back-pressure)	Hazard	Installation Dimensions and Position	Pressure Condition (I=Intermittent) (C=Continuous)	Comments	Use
ASSE 1015	Double-check valve assem-bly	BS & BP	Low	Inside building - 450 mm to 1 200 mm (centerline to floor) Outside building - 450 to 600 mm (centerline to floor) Horizontal only 1 500 mm required above device for testing	C	Valves per 404.3.3 Testing annually (minimum) per 404.3.8 Overhaul - 5 years (minimum) per 404.3.9	Fire sprinkler system (Type II low hazard) Washdown racks Large pressure cookers and steamers
ASSE 1020	Pressure type vacuum breaker	BS	High	300 mm to 1 500 mm above highest outlet Vertical only	C	Valves per 404.3.3 Testing annually (minimum) per 04.3.8 Overhaul - 5 years (minimum) per 404.3.9	Degreaser laboratories, photo tanks, Type 1 lawn sprinkler systems, and swimming pools (must be located outdoors)

Standard Number	Device or Method	Type of Protection (BS = back-siphonage) (BP = back-pressure)	Hazard	Installation Dimensions and Position	Pressure Condition (I=Intermittent) (C=Continuous)	Comments	Use
ASSE 1024	Dual-check valve	BS & BP	Low	Any position	C	* See footnote	Fire sprinkler systems, Type 1 buildings, outside drinking fountains, automatic grease recovery devices
ASSE 1035	Atmos-pheric vacuum breaker	BS	Low	150 mm above flood level	I/C per manufacturer		Chemical faucets, soft drink, coffee, and other beverage dispensers, ice makers, dental chairs, hose sprays on faucets not meeting standards. Miscellane-ous faucet applications
ASSE 1019	Wall hydrant vacuum breaker	BS	Low	Integral to hose faucet by manufacturer pressure condition.	I	Self-draining type required	Hose bibs, hydrants and sill cock

Table Note:

*A tag shall be affixed to all ASSE 1012 and 1024 devices indicating:

a. Installation date
b. The following statement: "FOR OPTIMUM PERFORMANCE AND SAFETY, WSSC CODE REQUIRES THAT THIS DEVICE SHALL BE REPLACED EVERY 5 YEARS."

H.11 Pure Water Systems

The quality of water distribution in a central building distribution system should be a joint decision between research personnel, the A/E, and the Project Officer. The water quality decision must reference an industry standard such as ASTM or be very specific as to the water conditions so that the design engineer can appropriately engineer the system.

The requirement for a very high-quality central distribution system will be expensive to install and cost-prohibitive to maintain on a long-term basis. Most buildings are better served by a medium grade (ASTM Reagent Grade) system that utilizes local point-of-use polishing equipment for specific needs. Researchers generally do not have the confidence that the central system will have a consistent high quality, so they ultimately install polishing equipment anyway.

A water analysis should be prepared during the design stage to determine the degree of treatment required. The water supplied should be softened to between 50 and 85 mg/L (3 to 5 grains per gallon). If specialized equipment requires water having a hardness less than 50 mg/L, a special study should be made to determine the most feasible means of obtaining water of the necessary hardness.

Numerous types and combinations of water systems are installed at the NIH for laboratory use. Distilled water, deionized water, and a deionized water system containing a reverse osmosis unit have been installed in most applications. The current preference for the NIH is to have a central recirculating reverse osmosis system to supply general use water and to utilize local polishing equipment at specific point-of-use areas.

Where projects involve renovation work, new materials should be identical to existing and should be installed in a similar manner. The NIH will make all final connections to existing systems. Designers should arrange piping so that a minimum number of connections to existing systems are required.

Type III grade water as specified in ASTM Standard D 1193 should be provided for heat exchangers used for steam humidification, hospital pharmacy, electrically powered sterilizers, hospital laboratories, distillation unit, glassware washing, and central material service. The NIH may require ASTM Standard D 1193 Type I water

that will be supplied by a local subsystem. The program of requirements should determine additional systems and use areas for a specific project.

Reverse osmosis shall be considered for primary treatment with deionization or distillation for secondary treatment, as required at point of use to meet. The water purity obtainable with the different methods of purification is:

Table H.11 Required Water Purity Levels

System	Purity Level
Reverse osmosis	100 000 ohms-cm
Deionization	15 to 18 megohms-cm
Distillation	800 000 ohms to 1 megohm and bacteria-free on triple-effect

H.11.1 Reverse Osmosis (RO) Systems: RO systems should be located in the building penthouse to reduce pressure on system components and to minimize the storage capacity of tanks. RO systems consist of a series of built-up components, which may include the following:

- Automatic back-washable multimedia filters
- Automatic back-washable carbon filters
- Automatic regenerable softener
- Duplex 1 micron prefilters
- Reverse osmosis unit
- Storage tanks
- Tank controls and filters
- Duplex recirculation pumps
- Polishing service deionization tanks
- Resistivity metering equipment
- Ultraviolet sterilizer
- Post-filtration system

H.11.2 Distilled Water Systems: Distilled water may be obtained from a central distilled water system or from a still located within the laboratory. Steam is utilized in production for central distilled water systems; electricity is used for small local systems. For central systems, titanium distilling equipment and Teflon- or titanium-

lined storage tanks should be sized to ensure an adequate daily volume of water. Multiple stills and tanks shall be utilized to allow downtime for maintenance purposes. Still size should be determined on the basis of 24 hour operation of the stills and the provision of adequate storage tank capacity. Local stills should be made of glass. Piping, fittings, and the wetted parts of valves should be made of perfluoroalkloxy PFA Teflon, plastic: ASTM Standard D, Schedule 40 PFA.

Stills should be installed in nearby mechanical rooms to minimize the piping distribution of distilled water and should be placed at an elevation within the building to enable gravity flow to the outlets in the piping system. Mechanically pressurized systems are not recommended, since the pump and fittings may introduce impurities in high-quality water. Where distilled water is not required, but a water quality that is better than deionized water is needed, a local water-polishing system made up of filters, a reverse osmosis unit, a cation unit/anion unit, and a mixed-bed unit may be installed. Distilled water systems should not be cross-connected with any other water system such as deionized, RO, or local water-polishing systems.

H.11.3 Deionized Water Systems: Deionized water is used for experiments and washing laboratory glassware and equipment. Generally, a central deionized water system is not used to supply deionized water throughout a laboratory building but supplies the water to a central washing facility. Small deionizing equipment is utilized locally for individual laboratory requirements. The A/E should determine through consultation with the research personnel and the Project Officer the requirement for a central washing system and local laboratory systems.

Deionized water systems consist of filters, cation exchange units, ion-exchange units, and mixed-bed units. A means for measuring and totalizing flow from the exchange units and to measure the resistibility of the deionized water should be provided. Regeneration systems should be provided for central systems. Deionized water shall be recirculated through a reverse-return piping system and filtered to maintain high purity. **The A/E shall provide to the NIH all information, including drawings, specifications, cost data, supplier list, and system requirements so that the NIH can advertise a separate contract for supplying, maintaining, and regenerating the deionizing equipment.**

H.11.4 System Distribution: The design engineer must clearly define sizing parameters of the systems including total daily consumption, peak system flow, hourly system flow, distribution flow to each floor or zone, and maximum flow per

outlet. Pure water systems normally have a large diversity between low- and high-flow conditions with multiple peaks sometimes occurring throughout the day. Each floor or zone should be balanced in the field to provide a predetermined quantity of water so that all research functions are satisfied.

It is critical that the design engineer receive a signed-off system schematic and design criteria document for the pure water system before the design is completed. Design parameters tend to change during the construction phase as equipment technology evolves and final equipment selections are made. The water system designs, to the extent practical, should consider future requirements, pressure and flow changes, and water quality improvements. Dead-legs in distribution and return piping should be minimized to 6 pipe diameters in length where possible. All branches shall be circulated. A rotameter and sanitary diaphragm-type valve should be provided in the return line from each lab floor to permit proper balancing and visual indication of flow. The piping system distribution on each floor should be independent of other floors to the connection with the main supply and return riser. Appropriate sampling and sterilization ports should be provided. Circulation pumps should be constructed of Type 316 stainless steel.

Circulated taps with valving in the normally open position should be provided when anticipating pure water requirements for the future. Cutting into existing pure water system risers and the use of valves with dead-legs capped for the future should be discouraged because of the potential for contamination of the system.

Pipe materials and sizing should be consistent with the defined system parameters. The piping system material must be compatible with the degree of water purity required. Piping, valves, fittings, and fabrication techniques should be selected on the basis of the ability of each item to handle pure water without inducing reionization or recontamination. Pipe sizes should limit excessive velocity and pressure drop while preventing low flow or stagnant conditions in the distribution. Dead-legs should be avoided where possible, and floor branches should be recirculated.

All pipe and pure water system sizes and components should be reviewed and approved by the system vendor. A sole-source contractor should provide the entire system, including piping and outlets, so that there is a single point of responsibility for the successful operation of the system.

H.12 Process Water Systems

H.12.1 Animal Watering System (AWS): The AWS must be separated from the domestic water system with a reduced-pressure BFP device. The need for an AWS and the quality of water to be utilized in the AWS must be determined by the users and animal care staff. The type and quality of water depend on the type of animal populations, the type of research being conducted, and the quality of domestic water supply. The domestic supply may be adequate for many types of animals and research. In other applications, treated water may be required. Treatment may include reverse osmosis and deionization or may require chemical injection. Specific requirements for the zoning, number of water connections per room, control, injection capability, flushing, and recording/monitoring must be verified with the users. When automated watering systems are used, a manifold for flushing hose coils is required in the cagewashing and rackwashing area.

All pipe and watering system sizes and components should be reviewed and approved by the system vendor. A sole-source contractor shall provide the entire system including piping and outlets so that there is a single point of responsibility for the successful operation of the system.

H.12.2 Research Equipment: Research equipment such as lasers, nuclear magnetic resonance equipment, mass spectrometers, and so on often require a water source for cooling and adequate drainage facilities. Where possible, such equipment should be connected to the process-cooling water system and recirculated for re-use. Where equipment operating conditions, pressure requirements, temperature limitations, or backpressure restrictions require the use of a plumbing water source, the industrial water system should be used. Equipment connections frequently require pressure-regulating valves, relief devices, balancing valves, flow controllers, and temperature regulators to complete their installation. Drainage connections must always be indirect and sometimes require gravity flow. Floor sinks on other large, open-site drains should be used to handle the large, intermittent discharges.

J. Fire Protection

J.1 Fire Protection - Applicability

This reference Design Policy and Guidelines section contains general fire protection requirements for new construction at NIH facilities. Modifications, renovations, and alterations of existing NIH facilities shall be accomplished as nearly as practicable with the requirements for new construction except as provided in this section. Only the altered, renovated, or modernized portion of an existing building, system, or individual component shall be required to meet provisions applicable to new construction, unless otherwise required in this document.

Additional requirements for individual occupancies can be obtained in the Biomedical Research Laboratories and Animal Research Facilities volumes of the NIH Design Policy and Guidelines. Additional requirements specific to the Clinical Research Center complex are in the *Clinical Research Center Design Policy and Guidelines*, available from the NIH Project Officer.

J.1.1 Modifications, Renovations, and Alterations Over 25 Percent: If the cost of modifications, renovations, and alterations, as described in the *International Building Code* (*IBC*) (Existing Structures chapter) is over 25 percent of the physical value of the building, by consensus of the NIH Design Policy and Guidelines Committee, it shall be determined to what degree the portions so altered or repaired shall be made to conform to the requirements for new buildings.

J.1.2 Modifications, Renovations, and Alterations Under 25 Percent: If the cost of modifications, renovations, and alterations, as described in the *IBC* (Existing Structures chapter), is under 25 percent of the physical value of the building, by consensus of the NIH Design Policy and Guidelines Committee, restoration of the building to its condition previous to damage or deterioration shall be permitted with the same kind of materials as those of which the building was constructed, provided that such construction does not endanger the general safety and public welfare and complies with other provisions of the *IBC*.

J.1.3 Modifications, Renovations, and Alterations: If the alteration, renovation, or modernization adversely impacts required life safety features, additional upgrading shall be required. Existing life safety features that do not meet the requirements for

new buildings, but exceed the requirements for existing buildings, shall not be diminished. Any changes in use group or increase of building volume shall be considered new construction, and requirements of current codes shall be applied to the extent practical. Additional requirements for individual occupancies can be found in NIH Design Policy and Guidelines volumes: Clinical Center, Biomedical Research Laboratories, and Animal Research Facilities.

J.2 General Policy

Fire protection design shall follow the National Fire Protection Association (NFPA) *National Fire Codes* (*NFC*) and the *IBC*, unless specifically altered or amended in this document. When a conflict between the various code requirements exists, the most stringent/conservative standard shall apply. All portions of the NFPA NFC shall be followed including appendices, recommended practices, interim amendments, and formal interpretations. All NFPA *NFC* wording using the word "should" shall be interpreted as "shall" (i.e., must be followed). Any departure from NFPA *NFC* or *IBC* requirements must be clearly delineated in the architect/engineer's (A/E) "Fire Protection Engineering Analysis," if required (see requirement noted below), or other project correspondence, along with justification of the departure. The most recent published code or standard, in place at the date of the design "notice to proceed" (NTP), shall be used by the design team. The NIH redesign policy is based on a project having only a 1 year shelf life. Any project that has been shelved or inactive for 1 year or more must go through a review process to ensure compliance with the latest published codes and standards.

J.2.1 Authority Having Jurisdiction (AHJ): The NIH Fire Prevention Section (FPS) is the AHJ defined in the NFPA and *IBC* requirements.

J.2.2 Listed Equipment and Materials: All fire protection devices, equipment, and materials shall be listed for the intended use. Listed shall mean equipment and materials that are identified in the *Factory Mutual Research* (*FM*) *Approval Guide* and/or the various directories of Underwriters Laboratories (UL). Testing by another nationally recognized laboratory may be approved by the NIH FPS on a case-by-case basis.

J.3 Fire Protection Submission Guidelines

A/Es shall provide language in the contract documents to reference the use of the Fire Protection Submission Guidelines for all fire protection system(s). These Guidelines contain the submission requirements for design and construction submissions as well as required construction submittals and inspections.

J.4 Fire Protection Engineering Analysis

All designs for new structures (including designs for new wing additions or other additions to existing structures that modify the height and area or change the use group) and modifications, renovations, and alterations that include the addition or modification of fire protection systems or egress components shall have a "Fire Protection Engineering Analysis" performed by a registered Fire Protection Engineer at the concept and final design phase. A registered Fire Protection Engineer shall be defined as a Professional Engineer with expertise in the field of Fire Protection Engineering as demonstrated by passing the National Council of Examiners for Engineers and Surveyors "Principals and Practice Examination" in the discipline of Fire Protection Engineering. A Fire Protection Engineering Analysis shall contain the following key features:

- An overview of all active and passive fire protection for the proposed facility.
- A list of all fire protection features required by the codes or standards referenced above. All fire protection and life safety features shall be suitably integrated.
- Type of construction.
- Classification of occupancy.
- Analysis of fire resistance ratings required by hazardous materials in excess of the exempt amounts identified in the *IBC*.
- Fire-resistance rating of all structural components (floors, columns, and bearing walls, exterior walls, and roof), clearly specifying the applicable industry design guide and/or UL designation (alphanumeric or otherwise) for the protection scheme for each component.
- Location of all fire-rated assemblies used for the enclosure of all stairs/shafts/openings and/or the separation of fire areas and the fire-rated components (doors, dampers) necessary to protect openings in these barriers. Indicate the hourly rating of these barriers and the components protecting

openings, clearly specifying the applicable industry design guide and/or UL designation (alphanumeric or otherwise) for each barrier.

- Location of all smoke barriers and the smoke-rated components (doors, dampers) necessary to protect openings in these barriers, clearly specifying the applicable industry design guide and/or UL designation (alphanumeric or otherwise) for each smoke-rated component.
- Building separation or exposure protection. Include temporary construction separation protection required by NFPA 241 requirements.
- Fire protection criteria references.
- Occupant load and exit calculations based on NFPA 101® *Life Safety Code*® (LSC®) requirements. Include analysis of existing exit requirements during construction.
- Automatic extinguishing systems, including the identification of sprinkler-protected areas and areas protected by other automatic suppression means.
- Manual extinguishing equipment, including type and size of equipment and areas of coverage.
- Fire standpipe system, including hose valve size and thread type and areas of coverage.
- Water supply analysis to determine system requirements and adequacy of the present water supply. This analysis shall determine the need for a fire pump assembly. The water supply data shall be obtained by the A/E design team via fire hydrant flow tests. (Flow test results should be transmitted to the FPS for concurrence before use in the design process.)
- Describe Fire Department (FD) access, including location of FD key box, roof access, distance of fire hydrants from the structure, distance of each side of the structure from the street, distance of fire-standpipe and/or sprinkler connections from the road, and distance of fire-standpipe and/or sprinkler connections from the closest fire hydrant.
- Automatic detection/fire alarm system, including the identification of detection requirements, zoning arrangements, elevator control system interconnection, and evacuation alarm description.

J.5 Types of Construction (*IBC*)

The construction classifications required by the *IBC* shall be followed, based on occupancy, building height, building area, and other factors, as identified in the *IBC*.

J.6 Fire-Resistant Materials and Construction (*IBC*)

The *IBC* "Through-Penetration System" section is amended by the following additions: All new and existing fire-rated barriers exposed or penetrated during construction (includes fire-rated walls, floors, and ceiling/roof assemblies) shall be firestopped with an approved and listed material. All existing unsealed (or improperly sealed) penetrations shall be shown on the contract drawings, and the quantity and sizes shall be noted for repair. Firestopping material product data and installation details shall be submitted in accordance with the Submission Guidelines. The firestopping system shall maintain the required fire rating (designed or original) of the fire-resistive barrier.

All boiler rooms and furnace rooms shall be separated from adjacent construction by minimum 1 hour fire-rated construction.

The *IBC* reduction of shaft fire ratings in high-rise buildings with use of in-shaft sprinklers is not permitted.

Main campus facilities with quantities of hazardous materials in excess of the exempt amounts identified in the *IBC* "Hazardous Materials" section shall require coordination with the NIH Fire Prevention Section so that a facility-specific hazardous material plan can be developed in conjunction with ORF and the users. Off-campus facilities with quantities of hazardous materials in excess of the exempt amounts identified in the *IBC* "Hazardous Materials" section shall be provided with fire-rated separations as required by the *IBC* "Hazardous Materials" section in order to divide the building such that exempt amounts of "Hazardous Materials" are not exceeded.

Spray-applied fireproofing shall be a cementitious type or a gypsum-based product only. Friable mineral fiber or mineral wool-type fireproofing is **not** permitted.

All temporary interior construction barriers shall be constructed of noncombustible or fire-retardant treated materials. All plastic sheeting shall be fire-retardant type per

NFPA 241. Temporary openings in required 2 hour fire-rated wall, shaft, and floor assemblies shall be protected by 2 hour fire-rated temporary interior construction barriers. Temporary fire-rated construction barriers shall be constructed when required by NFPA 241.

J.7 Fire and Smoke Dampers (NFPA 90A)

Fire Dampers shall be installed in locations where required by the *IBC*. The *IBC* requirements shall be modified to allow the omission of fire dampers in 1 hour-or-less fire-rated walls and shall be extended to all on-campus buildings, which are not classified as Use Group H, regardless of sprinkler protection.

Fire dampers shall **not** be provided in any grease removal exhaust system per NFPA 96. Provide alternative protection consisting of independent risers in a fire-rated shaft (vertically and horizontally). Provide cleanouts per NFPA 96.

Fire dampers shall **not** be provided in any laboratory fume removal exhaust system or in laboratory hoods per NFPA 45. Alternative protection of the fire-rated assembly shall be provided by means of **one** of the following:

- Independent risers from each floor in a fire rated shaft or
- Steel subducts at least 559 mm (22 inches) vertically in length shall be used at each branch duct connection of exhaust risers in which the airflow moves upward and the riser is appropriately sized to accommodate the flow resistance created by the sub-duct.

Fire dampers shall be provided in all other duct openings of all rated vertical shafts. Transfer grills in fire-resistive partitions of 1 hour or greater shall be protected by fire dampers. Fire dampers shall be installed in accordance with the requirements of the Sheet Metal and Air Conditioning Contractors' National Association (SMACNA). Fire dampers shall be installed in accordance with the requirements of its listing.

Duct penetrations in required smoke-resistive barriers shall be protected by smoke dampers, unless other code-permitted exceptions exist. Smoke dampers shall be controlled as required by NFPA 90A. Access shall be provided to each fire and/or smoke damper for maintenance purposes. All fire and smoke damper installations shall be in strict accordance with the UL listing.

J.8 Interior Finishes (NFPA 101®)

All interior wall and ceiling finishes in exit enclosures shall be Class "A," with a flame spread rating of 0-25. The smoke-developed rating shall be 0-450 for walls and ceilings. All interior floor finishes in the exit access corridors and in the stairwells shall be Class I (minimum critical radiant flux of 0.45 W/cm^2).

Sound-attenuation materials within wall cavities shall have a flame-spread rating of 0-75 and a smoke-developed rating of 0-450.

J.9 Fire Protection Suppression Systems

J.9.1 Automatic Sprinkler Systems (NFPA 13): All new occupied facilities and/or additions over 185 m^2 shall be sprinklered for compliance with the Federal Fire Safety Act of 1992.

Major modifications, renovations, and alterations (as defined in the Modifications, Renovations, and Alterations Over 25 Percent paragraph) of an unsprinklered building shall include the provision of sprinklers in the renovated areas with provision of blanked-off connections of suitable size to provide future sprinkler protection in other areas of the facility.

Smaller modifications, renovations, and alterations (as defined in the Modifications, Renovations, and Alterations Under 25 Percent paragraph) shall, whenever feasible, include the provision of capped-off sprinkler piping in the renovated areas to facilitate the future provision of sprinklers throughout the facility in order to implement NIH policy to provide sprinkler protection in all occupied facilities. The capped-off sprinkler piping shall be sized in accordance with the ordinary hazard pipe schedule method described in NFPA 13.

All sprinkler system designs shall meet, at a minimum, NFPA 13 Ordinary Group I spacing and hydraulic requirements. In office buildings that do not contain mixed use laboratories, light hazard occupancies group spacing and hydraulic requirements can be provided with approval by consensus of the NIH Design Policy and Guidelines Committee. NIH campus buildings that currently have this designation include Buildings 1, 2, 31, 38A, and 45.

Wet pipe sprinklers shall be used, except in areas subject to temperatures below 4 °C. The minimum slope toward the main drain of the system branch lines shall be 4 mm/m. The minimum slope toward the main drain of the system mains shall be 2 mm/m. The maximum number of dry pendant or dry sidewall sprinklers shall be limited to 25 sprinklers per system.

All exterior sprinkler supply mains shall be adequately protected from freezing by proper burial depths in accordance with NFPA 24. Sprinkler piping exposed to freezing temperatures shall be part of a dry pipe system or, in instances such as a sprinkler in a building canopy, dry pendant heads may be used on a wet system. Heat trace tape is not permitted.

Sprinkler locations shall **not** be shown on the contract drawings, with the exception of special design areas (e.g., water curtains, aesthetically sensitive areas). Sprinkler locations at special design areas, if shown, shall be designed by a registered Fire Protection Engineer (see Fire Protection Engineering Analysis paragraph) or a National Institute for Certification in Engineering Technologies (NICET) Level III or IV sprinkler designer. Where sprinklers are shown, provide the following statement noted on each drawing: "Sprinkler locations have been shown for suggested and illustrative purposes only. Final sprinkler locations shall be coordinated in the field based on NFPA 13 spacing requirements. Sprinkler system shop drawings shall be prepared and submitted in accordance with NFPA 13 spacing requirements."

Sprinklers shall not be provided in elevator hoistways. See Elevator Fire Protection paragraph for additional requirements.

The sprinkler pipe shall be Schedule 40 black steel or galvanized, except for installations where nonferrous materials are required. Schedule 5, Schedule 10, "lightwall" designated, or plastic sprinkler pipe is **not** permitted.

Sprinkler system fittings shall meet the following requirements: Fittings into which sprinklers and sprinkler riser nipples are threaded shall be welded, threaded, or grooved-end type. Plain-end fittings with mechanical couplings and fittings that use steel gripping devices to bite into the pipe when pressure is applied are **not** permitted. Rubber-gasketed grooved-end pipe and fittings with mechanical couplings shall be permitted in pipe sizes 40.0 mm and larger. Fittings, mechanical couplings, and rubber gaskets shall be supplied by the same manufacturer in accordance with the manufacturer's written instructions. Fittings shall be malleable iron, banded-type,

or cast ferritic ductile iron with threaded ends **or** cut grooved with malleable iron or ductile iron fittings **or** standard seamless steel with butt-welded ends **or** forged steel with flanged ends. Copper tube shall be joined with brazed wrought copper fittings. Dielectric transitions shall be used as necessary in areas where ferrous piping cannot be used. Where pendant sprinklers are installed on exposed piping (in areas with concrete ceilings), tee and elbows to which sprinklers are connected shall have 1 inch outlets and shall be provided with 25 mm (1 inch) by 12 mm (0.5 inch) hexagon reducing bushings to permit connection of 25 mm (1 inch) drop nipples in the future.

All concealed sprinkler piping and sprinkler piping in the stairwells, storage rooms, mechanical rooms, and utility rooms shall be painted red enamel. All other exposed sprinkler piping (outside the stairwells) shall be painted to match the existing ceiling, and red enamel bands 0.1 m wide shall be painted at 3.0 m intervals. In aesthetically sensitive areas, exposed sprinkler piping shall be painted to match the existing ceiling without red enamel bands. Valves, inspector test assemblies, low-point drains, and auxiliary drains shall be provided with red enamel bands.

Sprinkler system isolation valves shall be located a minimum of 1.8 m and a maximum of 2.3 m above the floor. Where applicable, sprinkler system connections to the riser shall be positioned 90 degrees apart from any standpipe connections sharing the same riser. Where system isolation and/or drain valves are located above “hard ceilings,” a minimum 0.46 m by 0.46 m access hatch shall be provided.

All new sprinkler systems shall have a central drain riser adjacent to the system riser, which shall be fully accessible to maintenance and safety personnel. With the exception of low-point and auxiliary drains, all new system drain risers shall be hard-piped to an approved exterior location or to a safe location inside the building which shall accept full water flow without causing property damage or a safety hazard.

Inspector’s test locations shall be provided to test the hydraulically most remote point in each system. These inspector’s test drains shall also be piped as described above. Listed combination test/drain assemblies are permitted.

Quick-response sprinklers are to be used throughout all NIH facilities, but standard-response sprinklers shall be used in autoclave areas, electrical switchgear rooms, transformer rooms, electrical closets, freezers, cold rooms, and mechanical rooms.

Sprinkler temperature rating shall be between 68 and 80 °C for all NIH facilities/ occupancies except for the following: (1) sprinklers designed for 93 °C shall be used in electric closets, and (2) high-temperature sprinklers rated at 141 °C with sprinkler head guards shall be used in autoclave areas, mechanical rooms, electrical rooms, electrical switchgear and transformer rooms, and any other areas in which high temperatures will routinely be experienced.

Because of performance issues, flow control (on/off) sprinklers shall **not** be used on NIH projects at this time.

All sprinklers shall be installed at least 460 mm from any air devices.

In areas with ceilings designed for water washdown, gasketed concealed sprinklers shall be provided. In areas that also have a pressure differential at the ceiling, which can affect the operation characteristics of the concealed sprinklers, the gasketed concealed sprinklers shall be specifically listed for use in ceilings with pressure differentials.

Installation of a backflow preventer on the sprinkler supply main, below the system isolation valve(s), is required for all new sprinkler installations. The backflow preventer shall be selected to minimize friction loss through the device.

J.9.1.1 Sprinkler Clearances: Sprinkler clearances to obstructions, including shelving, shall be in accordance with NFPA 13 spacing requirements. See General Design Guidelines, Section: Architecture, for shelving construction requirements. See Figure J.9.1.1, Wall-Mounted and Peninsula Shelving Height Policy, for additional sprinkler clearance requirements.

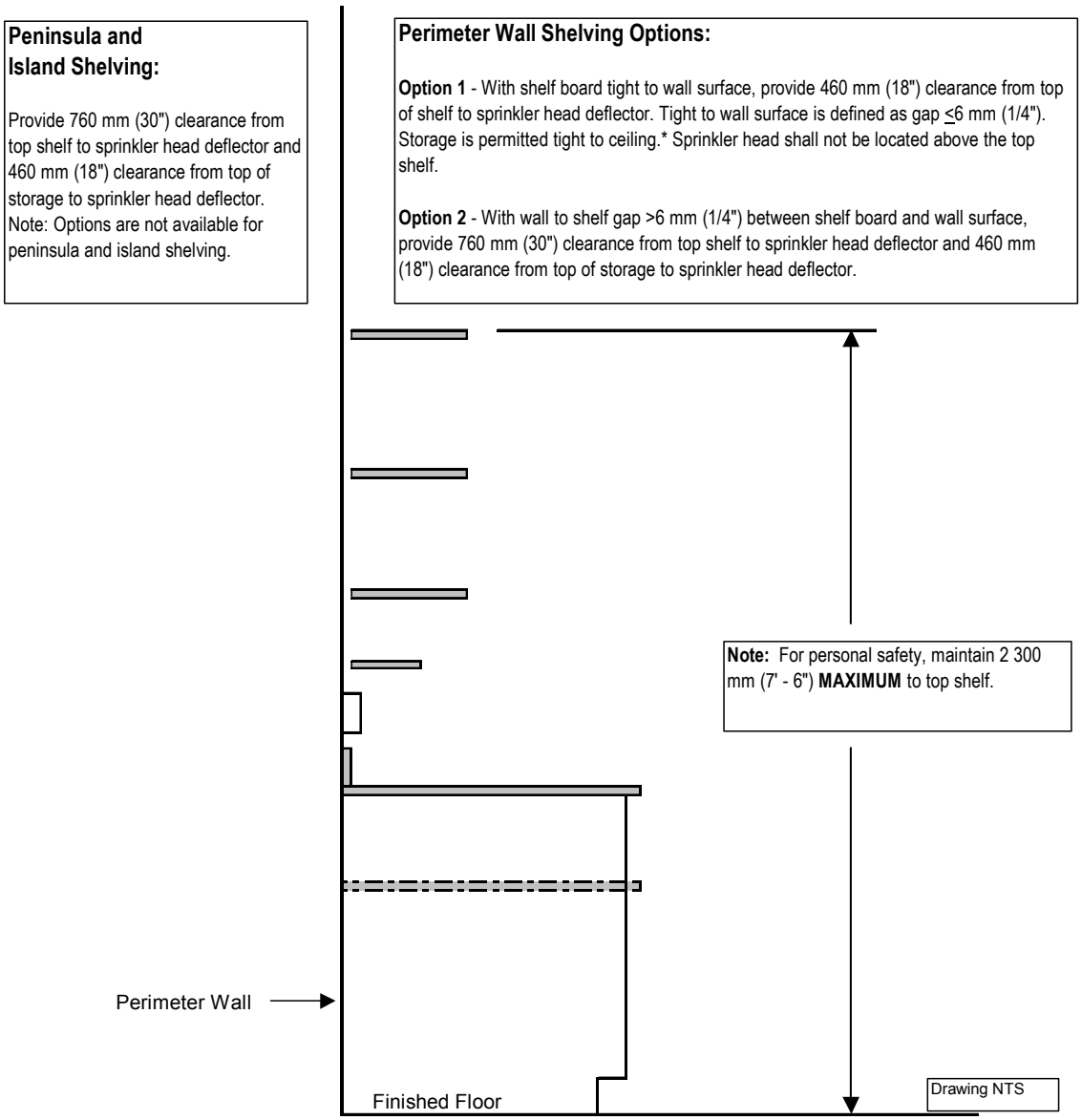

Figure J.9.1.1 Wall-Mounted and Peninsula Shelving Height Policy Sprinkler Head Clearance to Shelving

*Note: Per NFPA 13, the 460 mm (18 in) dimension is not intended to limit the height of shelving on a wall or shelving against a wall. Where shelving is installed on a wall and not directly below sprinklers, the shelves, including storage thereon, may extend above the plane located 460 mm (18 in) below ceiling sprinkler deflectors. Shelving, including storage thereon, directly below sprinklers may not extend above a plane located 460 mm (18 in) below the ceiling sprinkler deflectors.

J.9.2 Water Supply Control Valves: (NFPA 24) When a dedicated fire protection service is provided, the isolation valve in the exterior water supply main shall be equipped with a lockable post indicator valve (PIV).

J.9.3 Standpipes: (NFPA 14 and 241) An interior Class I standpipe system is required if the facility has two or more stories above grade or more than one story below grade. An interior Class I standpipe system is required if the travel distance from the primary fire department vehicle access point to any point in the building is 61.0 m or greater. Class II and III standpipe systems are **not** permitted. Interior Class I standpipe system hose valves shall be provided in the following locations (*IBC* and NFPA 14):

- In every required stairway, on each floor level. Intermediate landing locations are **not** required.
- On each side of horizontal exits.
- In every exit passageway at any entrance from the exit passageway to other areas of a building.
- Provide an additional hose connection inside the roof access stair. Outside roof hose connections are not required.
- The most remote portion of each floor or story shall be within 46.0 m of a fire department hose valve (sprinklered or unsprinklered). The distance shall be measured at right angles in the normal exit access path. The AHJ is authorized to require that additional hose connections be provided in approved locations during the design phase of the project.

Standpipes shall be maintained in accordance with NFPA 241 during new construction, demolition, modifications, renovations, and alterations of existing NIH facilities.

No pressure-reducing valves shall be permitted on the standpipe riser or sprinkler system takeoffs.

All system identification signs required by the NFPA codes shall be provided by the contractor, and placement shall be coordinated with the NIH Fire Prevention Section and the appropriate maintenance organization.

J.9.4 Fire Department Connections (NFPA 13 and 14): At least one fire department connection (new building construction) shall be within 30.0 m of a fire

hydrant. If any plan dimension of the building is greater than 46.0 m, then a second remote fire department connection shall be provided.

The fire department connections shall be equipped with 2.5 inch National Standard Fire Hose Thread.

Each fire department connection shall be equipped with a fixed weather-resistant information placard that contains the following information: the type of system served and a physical description of the area of coverage.

J.9.5 Fire Hydrants (NFPA 24): All fire hydrants shall be UL listed or Factory Mutual approved and be of the dry barrel type. The hydrants shall have two 2.5 inch hose outlets and one 4.5 inch pumper connection with National Standard Fire Hose Threads in accordance with NFPA 24, *Private Fire Service Mains and Their Appurtenances*, and NFPA 1963, *Screw Threads and Gaskets for Fire Hose Connections*.

All hydrants shall be installed adjacent to paved areas between 0.9 and 2.1 m from the roadway shoulder or curb line, where they will be readily accessible to fire department apparatus. All hydrants shall be located at least 12.0 m away from the building they are intended to protect. Hydrants shall be installed with not less than a 150.0 mm connection to the supply main and shall be valved at the connection. Roadway valves shall be located between 0.9 and 1.5 m from the hydrant. The installation of all new hydrants shall conform to NFPA 24 except as modified above.

A minimum of two hydrants shall be provided within 150 m of each building. All parts of the building exterior shall be reached by hose lays from at least one fire hydrant of not over 400 m, with consideration given to accessibility and obstructions.

All construction contract drawings shall show the locations of all existing and new hydrants that are intended to protect a new or renovated facility.

Hydrant and standard thrust block details shall be provided.

J.10 Other Suppression Systems

Antifreeze systems are **not** permitted.

Preaction suppression systems are permitted on only a case-by-case basis. Coordinate with the NIH Design Policy and Guidelines Committee for selection and use.

Heat trace tape is **not** permitted.

Alternative agent suppression systems (water mist, Halon replacements) are permitted on only a case-by-case basis. Coordinate with the NIH Design Policy and Guidelines Committee for selection and use.

J.10.1 Commercial Cooking Fire Suppression Systems (NFPA 96): Approved fire suppression systems shall be provided below and within all commercial cooking hood systems and grease removal systems. The fuel/power controls, the exhaust fan controls, and any washdown equipment must be properly interfaced with the fire suppression system. UL-listed cooking area hood assemblies must be provided. Wet Chemical Extinguishing Systems or listed water washdown systems shall be provided. Dry Chemical Extinguishing Systems are **not** permitted.

J.11 Fire Pumps (NFPA 20)

Only electrically driven fire pumps shall be installed and shall be connected to an emergency power system (if available, see Fire Protection Emergency Power Requirements paragraph). The fire pump shall be sized to provide the most hydraulically most demanding sprinkler system. A separate hydraulic calculation for the standpipe risers and bulk mains shall be provided to demonstrate that NFPA 14-required fire hose valve flows can be met from fire apparatus connected to the building's siamese connection. Assume a mobile fire apparatus supply of 1 500 gpm @ 200 psi.

J.12 Fire Department Key Box

A fire department-secured key box shall be provided in all new construction for emergency fire department entry. The key box(s) shall be located at the main entrance door of the facility. If any dimension of the building is more than 46.0 m, then additional key box(s) shall be remotely provided. The key shall match other existing secured key boxes (Knox Series 9400).

J.13 Fire Department Access (*IBC*)

All new buildings shall have at least two sides readily accessible to fire department apparatus at all times. Access to all fire department connections must be provided.

Fire lanes shall be provided for buildings that will be set back more than 45.0 m from a public road or exceed 9.2 m in height and are set back more than 15 m from a public road.

Fire lanes shall be at least 6.1 m in width, with the road edge closest to the building at least 3.1 m from the building. All fire lanes shall have curbs painted and appropriate signs provided.

The minimum roadway turning radius shall conform to the standard 14.6 m semi-trailer template.

Fire lanes shall be constructed of an all-weather driving surface capable of supporting imposed loads of 27 216 kg. Turf-filled paver blocks are **not** acceptable as an all-weather driving surface.

Any dead-end road longer than 90.0 m shall be provided with a turnaround at the closed end at least 27.0 m in diameter.

Fire lanes and access areas for fire hydrants and automatic sprinkler/standpipe fire department connections shall be clearly identified by painting adjacent curbing yellow. In addition, signage shall be posted and spaced at 30.0 m intervals and/or at the beginning and end of the no-parking zones.

For roof access, every roof level of a building of two or more stories shall have at least one stairway access.

J.14 Fire Protective Signaling Systems (NFPA 72)

J.14.1 New Systems: All new occupied facilities and/or additions greater than 185 m^2 shall be provided with a fire alarm and evacuation system for compliance with the Federal Fire Safety Act of 1992.

Major renovations (e.g., of a wing or a floor) of a building with no fire alarm system shall include the provision of a fire alarm system in the renovated areas with provision of a control panel of suitable size to permit later expansion to other areas of the facility. All installations shall comply with the requirements of *IBC,* NFPA 101®, NFPA 70, and NFPA 72 requirements.

New fire alarm control panels shall be installed in the building's main lobby/entrance, unless approved by the NIH Design Policy and Guidelines Committee and the NIH Fire Department or when a fire command/control room is required by the *IBC*.

If the fire protective signaling system includes an automatic smoke detection system, other than smoke detection required for elevator fire protection, then an addressable multiplex fire alarm system shall be provided. When an addressable multiplex fire alarm system is modified, the A/E's design documents shall include system reprogramming, modification of graphic interfaces, and updating of system as-built drawings.

If the facility is considered a "high-rise building" in accordance with *IBC*, then an addressable multiplex fire alarm system shall be provided. The addressable multiplex shall be capable of transmitting a coded signal over a positive shunt non-interfering campus-wide McCulloh Loop system. The transmitting of the coded signal shall be an integral function of the addressable multiplex panel without the use of additional systems or foreign equipment. All fire alarm codes associated with the building fire alarm system shall be acquired from the NIH Fire Prevention Section.

J.14.1.1 Campus Fire Alarm Tie-In: The NIH campus is currently served with a McCulloh Loop coded fire alarm system. The McCulloh Loop is a four-wire supervised circuit and is powered by 48 V DC that is above ground potential. This characteristic enables the receipt of alarms in the event of a single open or ground fault condition. Coordinate with the NIH for location of tie-in. The connection shall utilize a noninterrupted water-resistant cable with a minimum of eight conductors (i.e., Type TC-XHHW-2, 14 AWG, 600 V, SUN RES DIR BUR or equivalent). Fire alarm designs shall include the connection to the campus loop in accordance with Figure J.14.1.1.

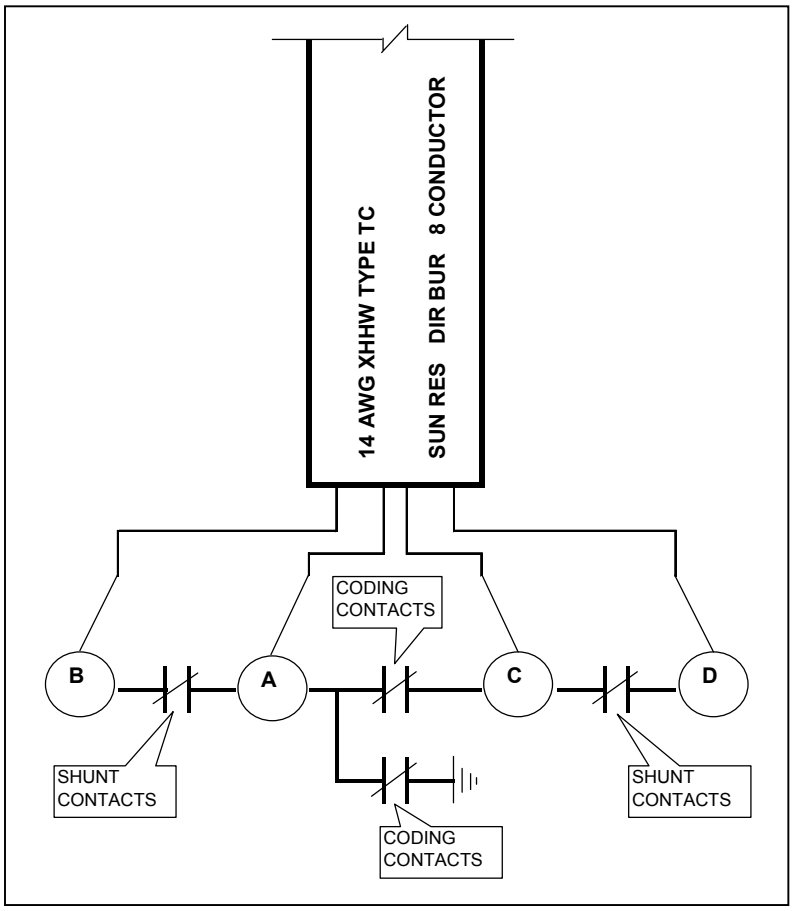

Figure J.14.1.1 Campus Fire Alarm Tie-In Detail

Notes:
1. Shut contacts are to remain open during coding.
2. Coding contacts provide four rounds of code.
3. All contacts rated for 3 A minimum.
4. Coding contacts are shown in the alarmed state.

All off-campus facilities in the Washington metropolitan area shall have a hearing-impaired paging system compatible with existing pagers used in other Washington metropolitan area leased facilities. The existing impaired paging system is the Inter-Page system. Coordinate all fire alarm paging codes associated with the building fire alarm system hearing-impaired paging system with the NIH FPS.

All special-purpose facilities that include animal facilities, health care occupancies, high-rise buildings, windowless structures, tunnels, and vaults shall be equipped with an addressable multiplex fire alarm system, fire department communication stations,

and two-way occupant emergency communication. Upon an alarm, the fire alarm speakers are to sound a “slow-whoop” signal, at 90 to 110 dB, for four cycles, followed by a voice evacuation message. Upon completion of the voice message, the slow-whoop shall resound and continue until the fire alarm control panel is reset or the “alarm silence” switch is activated.

When voice communication systems are provided, at least two audio channels shall be provided. The audio channels shall be suitably supervised. Voice paging shall take priority over all automatic messages. The voice communication system shall be equipped with backup amplifier(s) such that the loss of any amplifier shall result in automatic switching to the backup amplifier(s). The system’s amplifier(s) shall be sized to accommodate the activation of all notification appliances. Adjustable volume levels for notification devices is required.

Fire protective signaling systems shall have the following circuit supervision styles (NFPA 72):

- All signaling line circuits (SLC) shall meet Style 6 requirements.
- All panel-to-panel communication SLC circuits shall meet Style 7 requirements.
- All initiating device circuits (IDC) shall meet Style D requirements.
- All notification appliance circuits (NAC) shall meet Style Z requirements.

If the main fire alarm control panel is required to have a backup control unit, the backup control unit must be separated from the primary control unit by 2 hour fire-rated construction.

All fire alarm wiring shall be installed in 19.05 mm (0.75 inch) minimum conduit or electrical metallic tubing (EMT). All fire alarm wiring in damp locations (fire pump and valve rooms, at flow, and tamper switches) shall be installed in liquid-tight flexible metal conduit and liquid-tight device boxes. Flexible metal conduit is limited to 1.83 m and shall be secured per *National Electrical Code*®. All fire alarm wiring installed underground shall comply with NFPA 70®.

All concealed fire alarm conduit and conduit located in stairwells, storage rooms, mechanical rooms, garages, and utility rooms shall be painted red enamel. All other exposed fire alarm conduit (outside the stairwells) shall be painted to match the existing adjacent wall surface, and red enamel bands 0.10 m wide shall be painted at 3.0 m intervals. This painting requirement also applies to the pull boxes, junction

boxes, mounting boxes, and extensions. Red enamel bands shall not be painted on the pull boxes, junction boxes, mounting boxes, and extensions.

All fire alarm system notification appliances shall be combination audiovisual appliances, with the exception of conference rooms, rest rooms and operating rooms, which shall be visual-only appliances. Supplementary audiovisual appliances shall visually match and be of the same manufacturer as combination audiovisual appliances. In renovation projects, fire alarm notification appliances shall match existing equipment. Notification appliances shall not be installed in elevator cabs or stairwells. Special hazard areas, such as industrial shops, mechanical rooms, computer rooms, LAN rooms, power plants, and cagewash areas, shall be equipped with additional supplementary audiovisual appliances. High-voltage rooms shall be equipped with red lenses visual appliances.

General office areas are **not** to be equipped with smoke detection.

In locations where sprinkler and standpipe connections share a common riser, fire alarm devices (e.g., waterflow and tamper switches) shall be placed so as to minimize the possibility of draining operations spilling water onto the fire alarm devices.

Heat detectors shall be combination fixed-temperature (57.2 °C) and rate-of-rise units. High-temperature areas shall be equipped with appropriate high fixed-temperature heat detectors. Fixed-temperature (57.2 °C) heat detectors shall be provided in areas subject to rapid temperature increases.

The fire alarm wire for 120 V AC circuits shall be #12 AWG, solid copper, TFN insulation.

The fire alarm wire for 24 V DC (or less) circuits shall be #16 AWG, solid copper, TFN insulation or solid copper cable in strict accordance with written equipment manufacturer's requirements.

The fire alarm field devices (initiating, notification appliance, and interface equipment) shall be shown on the electrical (power or dedicated electrical fire protection) floor plans. All field wiring shall be color-coded and reflected on the system as-built drawings, with the exception of addressable systems, but the wiring shall be labeled as fire alarm wiring.

All fire alarm control panels, remote data-gathering panels, power supply panels, and terminal cabinets shall be equipped with CAT 45 key and lockset.

Battery backup is required on all fire alarm systems. Standby battery requirements shall include 72 hours of standby system supervision, and an additional 30 minutes with all notification appliances activated. In facilities served with an approved secondary power source or emergency generator-powered circuits, provide battery system for 24 hours of standby system supervision and an additional 30 minutes with all notification appliances activated.

Alarm initiation modules for hard-wired (e.g., not multiplex) fire alarm systems shall have an approved zone disconnect switch that permits the entire zone to be disconnected at the control panel without the need to remove wires or install jumpers. Operation of the zone disconnect switch shall cause operation of the system trouble signal on the fire alarm control panel. Smoke detection zones for buildings with hard-wired (e.g., not multiplex) fire alarm systems shall match boundaries of the sprinkler zones on each floor, unless an exception is authorized in writing by the NIH Design Policy and Guidelines Committee. Zoned multiplex (e.g., not addressable) fire alarm systems shall be programmable to take any zone out of service, but activation of this feature shall cause a system trouble signal. Addressable multiplex fire alarm systems shall be programmable to take any device, zone, or circuit(s) out of service, but activation of this feature shall cause a system trouble signal.

All testing of the system shall be performed in accordance with NFPA 72 requirements.

When required by the *IBC*, a fire command/control room shall be provided. The location and accessibility of the fire command/control room shall be separated from the remainder of the building by not less than 2 hour fire-resistance-rated fire barrier. The room shall be a minimum of 9 m^2 (96 square feet) with a minimum dimension of 2 438 mm (8 feet). Provide 1 525 mm (5 feet) of clearance in front of all panels and clearance at the top, sides, and back of panels per written equipment manufacturer's requirements. All *IBC* Fire Command Center requirements shall be provided with the following additional modifications:

- Shall be located at or near the main lobby entrance approved by FPS, preferably on an outside wall, not located next to or adjacent to boiler, transformer, or hazardous locations.
- Shall be provided with adequate ventilation necessary for removal of the heat generated by equipment.
- Electrical, mechanical, or plumbing equipment, other than directly related to the system, shall not be located in or routed through the fire command/control room including the fire command/control room ceiling plenum.
- Shall be provided phone and LAN connections.
- Room lighting and power outlets shall be on building emergency power with battery backup.

All 120 V AC primary operating power for the fire alarm system shall be obtained from the line side of the building incoming power source ahead of all building services and disconnect switches. An independently fused safety switch with provisions for the cover and operating handle to be locked in the "power on" position shall be provided. This fused safety switch shall be located adjacent to the main electrical distribution panel. This enclosure shall be painted red and shall be labeled by a letter designation.

All fire alarm systems shall be equipped with a 2 minute time delay, such that all "trouble" alarms are transmitted to the NIH Fire Department between 120 and 200 seconds after onset of the trouble condition.

The A/E shall provide a fire alarm riser diagram on the electrical power (contract) drawings with the following information shown:

- All fire alarm-initiating devices (smoke detectors, heat detectors, manual pull stations, sprinkler water flow switches, control valve tamper switches, and any other supervisory devices).
- All fire alarm-notification appliances (white strobes, red strobes [red strobes to be provided in electrical switchgear rooms only], horns, speakers, and chimes).
- Existing fire alarm control panel; new fire alarm control panel and any remote panels; all conduit and wire (sizes and quantity).
- All interfacing devices (electric door strikes, door hold-open devices, auxiliary relays, and terminal cabinets).

J.15 Duct Smoke Detection (NFPA 90A)

Duct smoke detectors are **not** required in on-campus buildings, except in air-handling units that serve health care occupancies per NFPA 101® requirements. Where duct smoke detectors are installed, they shall be installed in accordance with NFPA 90A and shall be of the photoelectric type, connected to the building fire alarm system, cause a supervisory (**not** evacuation) alarm condition, and cause shutdown of the associated air handler upon alarm.

J.16 Fire Extinguishers (NFPA 10)

Fire extinguishers shall have fully recessed cabinets, with the upper edge at 1.37 m above the finished floor. All fire extinguisher cabinets shall be sized to contain a 9.6 L pressurized water extinguisher (Type 2).

Fire extinguisher cabinet doors shall **not** have locks.

Fire extinguishers shall not be provided in open parking garages.

Where feasible, all fire extinguishers shall be located in the corridors. The maximum travel to an extinguisher shall be 23 m.

If the construction project requires more than 10 fire extinguishers, then the construction project budget shall include the purchase of the portable fire extinguishers. The NIH Fire Department shall specify the type and size of the fire extinguishers.

J.17 Means of Egress (NFPA 101®)

The design of life safety features shall comply with NFPA 101®, *Life Safety Code*®, requirements. Additionally, the NIH Corridor Utilization Policy shall govern the minimum widths of corridors as well as the provisions for and limitations on storage.

No loading dock exit door shall be utilized as a required egress path because they are subject to locking for security. Any such door shall be adequately posted with a sign reading “NO EXIT.”

In new construction, delayed egress locks are not permitted. Access control locks are permitted only on a case-by-case basis and shall be designed in accordance with NFPA 101®. Coordinate with the NIH Design Policy and Guidelines Committee for required system interfaces and use.

J.18 Roof Coverings (*IBC*)

All roof coverings shall be Class "A" as listed by UL in the UL *Building Materials Directory* based on UL 790, *Test Methods for Fire Resistance of Roof Covering Materials*.

J.19 Roof Deck Assemblies (*IBC*)

All roof deck assemblies shall be Class "1" as listed in the *FM Approval Guide* and/or as Fire Classified in the UL *Building Materials Directory.*

J.20 Fire Protection Emergency Power Requirements (*IBC*, NFPA 20, 72, and 101®)

The following systems that support life safety in a building shall be provided with an approved secondary power source:

- Exit signage
- Exit lighting (exit access and exit)
- Fire protective signaling system (fire alarm system)

For all new construction and major renovations, the following fire protection and life safety systems shall be connected to the emergency generator-powered circuits.

- Exit signage
- Exit lighting (exit access and exit)
- Fire protective signaling system (fire alarm system)
- Elevator(s) (operate one per bank and transferrable)
- Smoke control system and/or stair pressurization (including controls and fans)
- Electric fire pump
- Electric fire pump controller

- Dry pipe sprinkler system air compressor/air maintenance device
- Fire control room environment (power, lighting, HVAC)
- Elevator shunt trip power feeds

J.20.1 Electrical Receptacles for Fire Department Use: Provide single receptacle NEMA L5-20R, twist-lock, 125 V AC receptacles at each standpipe system connection within stairwells and at 30 m intervals in the exit access corridors at each level for the operation of fire department electrical equipment in the event of an emergency. The receptacles shall be provided with a red cover plate and be suitably identified by the lettered designation "For Fire Department Use Only."

J.20.2 Self-Luminous Exit Signs: Self-luminous or electroluminescent exit signs are a non-electrical product that uses radioactive tritium (H-3) gas to produce light. Tritium is regulated by the Nuclear Regulatory Commission as specified in 10 CFR 31.5. The installation of self-luminous exit signs is strictly prohibited at the NIH on any new construction, renovation, or replacement, including the temporary use for marking emergency egress.

The removal, tampering, or disposal of any remaining existing self-luminous exit signs is strictly prohibited. Signs are **not** to be abandoned, relocated, transferred, or disposed of as construction debris.

Immediately contact the NIH Radiation Safety Branch, (301) 496-5774 or 911, from an in-house campus phone) to report damaged or broken signs and to receive removal instructions and procedures.

J.21 Elevator Fire Protection (ANSI A17.1, NFPA 13 and 72)

Elevator fire safety arrangements shall meet the latest version of the ASME/ANSI A17.1 Elevator Code and NFPA 13 and 72 and the additional NIH requirements listed below.

The contractor shall provide Phase I Emergency Recall Operation and Phase II Emergency In-Car Operation key switches (which come with the installation of the elevators) for use during construction. After complete installation and before final acceptance by the Government, the contractor shall replace the aforementioned switches by installing Government-furnished Phase I Emergency Recall Operation and Phase II Emergency In-Car Operation key switches. These Government-

furnished switches shall be tested by the Government during the final inspection and acceptance testing of the elevators.

J.21.1 Phase 1 Emergency Recall Operation (ANSI A17.1 - 211.3a) A three-position (OFF, ON, and BYPASS) key-operated switch for Phase I Emergency Recall Operation shall be provided at only the primary designated level and alternate level for each single elevator or group of elevators. The key shall be removable in the OFF and ON positions only. The switch shall normally be in the OFF position. Operation of the three positions shall be as follows:

- OFF position. Restores normal elevator service to the elevator or group of elevators served by the switch.
- ON position. Recalls the elevator or group of elevators served by the switch to the designated or alternate level.
- BYPASS position. Allows the restoration of normal elevator service to all elevators served by the switch, regardless of elevator smoke detector(s) status.

J.21.2 Smoke Detectors (ANSI A17.1 - 211.3b) Smoke detectors (multiple detectors where lobby areas are large enough to require them) shall be provided in each elevator lobby/landing and in all elevator machine rooms (EMR). Smoke detectors shall **not** be installed at the top of the elevator shaft/hoistway.

The activation of a smoke detector in any elevator lobby/landing, other than the designated level, or in any associated elevator machine room shall cause all cars in the group (common to the machine room or hoistway) to return nonstop to the designated level in conformance with the requirements of ANSI A17.1.

If the smoke detector at the designated level is activated, the operation shall conform to ANSI A17.1 except that the cars shall return nonstop to an alternate level approved by the NIH Fire Prevention Section.

J.21.3 Phase II Emergency In-Car Operation (ANSI A17.1 - 211.3c): A three-position (OFF, ON, and HOLD) key-operated switch for Phase II Emergency Recall Operation shall be provided in all elevator cabs. The key shall be removable in the OFF, ON, and HOLD positions. The switch shall normally be in the OFF position. Operation of the three positions shall be as follows:

- OFF position. Automatically causes the elevator to return to the "designated level" for use by later-arriving firefighters.
- ON position. Permits the firefighter to take control of the elevator, overriding automatic operations.
- HOLD position. Allows the firefighters to remove the key and leave the car without danger of the car being taken to another floor.

The contractor shall provide Phase I Emergency Recall Operation and Phase II Emergency In-Car Operation key switches (which come with the installation of the elevators) for use during construction. After complete installation and before final acceptance by the Government, the contractor shall replace the aforementioned switches by installing Government-furnished Phase I Emergency Recall Operation and Phase II Emergency In-Car Operation key switches. These Government-furnished switches shall be tested by the Government during the final inspection and acceptance testing of the elevators.

J.21.4 Sprinklers in Elevator Machine Rooms (ANSI A17.1 - 102.2): Sprinklers shall be provided in all EMRs in accordance with NFPA 13. Sprinklers shall be rated at 141 °C and be equipped with sprinkler guards. The temperature rating of the sprinklers in the EMR must be higher than that of the heat detectors (57.2 °C). Sprinklers shall not be provided in elevator hoistways.

Fixed-temperature (57.2 °C) heat detectors shall be provided in each EMR. Activation of a heat detector shall cause shunt-trip breaker(s) to disconnect the main line power to the affected elevator. The actuation of heat detector(s) shall cause a "supervisory alarm" on the building's fire-protective signaling system, if provided. No heat detectors are required in the elevator hoistway. Heat detectors shall be placed within 0.61 m laterally of each sprinkler.

A sprinkler system waterflow switch shall be provided for the EMR sprinklers. It shall not be equipped with a time delay mechanism, and the waterflow switch shall not cause elevator power to shunt trip. Each sprinkler supply line serving EMR sprinklers shall be equipped with an electrically supervised (tamper switch) control valve located immediately outside the EMR.

For buildings with a multiplex/addressable fire alarm system, the interruption of power to the elevator driving machine upon activation of sprinklers in the EMRs shall

be accomplished through the fire alarm system software. The elevator shall perform Phase I recall prior to the interruption of power.

J.22 Smoke Control Systems (*IBC*)

Smoke control systems, if provided or being renovated, shall have their method of operation and control mechanisms clearly defined in the “Fire Protection Engineering Analysis.” Field control switches shall be provided, with locations coordinated with the NIH Fire Department.

K. Electrical

The following design policies and guidelines should apply to all systems within the electrical engineering discipline. The purpose is to provide uniformity of design based on the established NIH Design Policy and Guidelines.

K.1 General Building Guidelines and Design Considerations

K.1.1 Calculations: Each electrical design should include the submittal of the following design calculations:

- Lighting calculations showing required and designed lux
- Estimated panelboard loading (including 25 percent extra as a projection of future building loads)
- A projection/summation of the panelboard loads to justify the sizing of the transformers
- An economic analysis to justify the selection of either 120/208 V or 277/480 V on the secondary side of the transformers if the proposed secondary service voltage is different from the guidelines in paragraph K.2.13
- An analysis, for the 277/480 V choice, as to whether the stepdown transformer(s) should be large central units or smaller units placed throughout the building
- A short-circuit analysis to determine the AIC rating of the system components
- A coordination study to determine the circuit breaker settings and system coordination

The architect/engineer (A/E) should prepare calculations that show the available short-circuit currents at each bus and the voltage drop for each major cable run. Include in the calculation package an AutoCAD Drawing file in hard copy and electronic formats, showing corresponding bus and cable run identification number as in the calculations. The calculations package should be submitted to the NIH. The A/E should provide system load calculations for switchgears, switchboards, motor control centers, panelboards, busways, risers, and transformers. The A/E should provide product and photometric data sheets for all fixtures specified in the design.

The A/E should review and assess with the NIH during early design submissions the need for the contract documents to require a power system study to be provided by

an independent testing company. The power system study shall be performed using SKM System Analysis Power Tools software.

The study shall be submitted to the Project Officer prior to receiving final approval of the distribution equipment shop drawings and/or prior to release of equipment for manufacturing. If formal completion of the study may cause delay in equipment manufacturing, approval from the Project Officer may be obtained for a preliminary submittal of sufficient study data to ensure that the selection of device ratings and characteristics will be satisfactory.

The study should include executive summary, assumptions, short-circuit study results, load flow study results, motor starting study results, protective device coordination results, and conclusions. The study should include all portions of the electrical distribution system from the normal power source or sources down to and including the smallest adjustable trip circuit breaker in the distribution system. Normal system connections and those that result in maximum fault conditions should be adequately covered in the study.

The independent testing firm selected should be currently involved in high- and low-voltage power system evaluation. The study shall be performed, stamped, and signed by a registered Professional Engineer. Credentials of the individual(s) performing the study and background of the firm should be submitted to the Project Officer for approval prior to start of the work. A minimum of 5 years of experience in power system analysis is required for the individual in charge of the project.

The firm performing the study should demonstrate capability and experience to provide assistance during startup as required. Contract specifications should require the contractor to provide the required data for preparation of the studies to the independent company. The contractor should expedite collection of the data to ensure completion of the studies as required for final approval of the distribution equipment shop drawings and/or prior to release of the equipment for manufacturing.

K.1.2 Design: The design documents shall be presented for review at various stages of completion as determined by the Project Officer. The comments returned from the NIH reviewers must be given careful consideration, as these are based on experience with past designs that have caused problems for research or maintenance personnel. Written responses to these comments should be provided.

K.1.3 Design Analysis Narrative: Where the design is of an unusual nature and the intent is not readily discernible, a separate design analysis narrative should be prepared to explain the intent and reasoning behind the novel design. This should be presented in the earlier stages of review to ensure that the design is suitable for NIH personnel.

K.1.4 Operational and Maintenance (O&M) Manuals: Operation and repair manuals for all electrical equipment supplied on the project are required and should be called for in the specifications. This submittal shall be made in both hard copy and electronic formats on a CD-ROM, DVD, or similar media. Scanning may be used for items that are not available electronically. A meeting should be specified to turn over the equipment inventory and O&M manuals to the Office of Research Facilities (ORF).

K.1.5 Panel Schedules: The information to be supplied on the panelboard schedules is all data necessary to order the equipment and all data needed to completely identify the attached loads. Panel schedules shall be filled in on drawings utilizing the features included in the AutoCAD electrical software. Information to be clearly shown should include the following:

- Panel name
- Number and size of spare breakers
- Number of bused spaces and the maximum ampere ratings
- Total number of breaker positions in the panel
- Top feed or bottom feed
- Main circuit breaker (MCB) or main lugs only (MLO)
- Surface or recessed mounting
- Trip rating, frame rating, and number of poles of each breaker
- AIC rating of the panel; series rating not acceptable
- Identification of the load and the room name and room number
- Estimated connected load in watts
- Estimated connected load in volt-amperes (or kVA) per circuit
- Panel total connected kVA and amperes
- Panel total demand kVA and amperes

K.1.6 Reference Design and Safety Guidelines for the Electrical Designer: The NIH is a progressive and dynamic biomedical research institution where state-of-the-

art medical research is the standard practice. To support state-of-the-art research and medical care, the facilities must also be state of the art. It is the NIH's intent to build and maintain the electrical systems and facilities in accordance with the latest standards.

It has been the NIH experience that the renovation and rehabilitation of existing facilities do not always lend themselves to incorporating the "latest" standards of the industry. Some of the existing electrical systems are outdated or inadequate for the new load. Often the planned function is incompatible with the original criteria for the building.

The A/E should be alerted to this situation and make an evaluation early in the design stage to determine the implementation feasibility of the latest standards. The A/E should document such findings, provide recommendations, and report them to the Project Officer for a decision on how to proceed.

The A/E design firm should use and comply with, at a minimum, the latest issue of the following design and safety guidelines. In addition, the A/E should use other safety guidelines received from the NIH Project Officer or as required by the program.

The reference codes, regulations, and recommended practices include but are not limited to the latest versions of the following:

- *Americans with Disabilities Act Accessibility Guidelines* (*ADAAG*)
- Association of Edison Illuminating Companies (AEIC)
- American Hospital Association (AHA), Management and Compliance Series, *Electrical Systems for Health Care Facilities*
- American National Standards Institute (ANSI)
- AHA, Management and Compliance Series, *Fire Warning and Safety Systems*
- American Society of Mechanical Engineers (ASME) A17.1: *Safety Code for Elevators and Escalators*
- Building Officials and Code Administrators, International (BOCA) *The BOCA National Building Code*
- Electronic Industries Association (EIA)
- International Cable Engineers Association (ICEA)
- International Electrotechnical Commission (IEC)

- Institute of Electrical and Electronics Engineers (IEEE), *Color Books*
- Illuminating Engineering Society of North America (IESNA), *Lighting Handbook*
- Lightning Protection Institute, LPI 175 Standard of Practice
- *National Electrical Code* (*NEC*), National Fire Protection Association NFPA Standard 70
- National Electrical Manufacturers Association (NEMA)
- *National Electrical Safety Code* (*NESC*) IEEE C2
- International Electrical Testing Association (NETA), *Acceptance Testing Specifications for Electric Power Distribution Equipment and Systems*
- NFPA, *National Fire Codes* (*NFC*)
- Institute of Laboratory Animal Resources (ILAR), *Guide for the Care and Use of Laboratory Animals*
- Telecommunications Industries Association (TIA)
- *Uniform Federal Accessibility Standards* (*UFAS*)
- Underwriters Laboratories (UL)

K.1.7 Testing and Operational Requirements: The A/E should incorporate the requirements for testing and operational training and for the startup and checkout of building systems in the project specifications.

K.2 Normal Power

K.2.1 New Service Connection: The NIH will determine the most appropriate location for a service connection to the high voltage (13.8 kV) system on the NIH Bethesda campus. The service may require a new feeder from the nearest 15 kV substation. Contact the NIH's senior electrical engineer for more detailed information specific to the project.

All secondary substations at the NIH Bethesda campus where the anticipated load is over 500 kilovolt-amperes (kVA) shall be spot network type. If redundancy is required at facilities other than on the NIH Bethesda campus, the senior electrical engineer may suggest a double-ended, secondary selective system for review. The secondary selective system, if used, should consist of two primary feeders, two fused load interrupter switches, two transformers, two secondary main breakers, and one tie breaker, plus the necessary feeder breakers. Secondary selective systems should be provided with automatic transfer.

K.2.2 Standard Cable Size and Type: The NIH has standardized 500 thousand circular mils (KCMIL) and 350 KCMIL as the preferred size for the 15 kV ethylene-propylene rubber (EPR) cable. The system voltage is a nominal 13.8 kV, and the NIH system is operated ungrounded. The cable is compact-sector, 133 percent insulation, shielded, with the lead sheath grounded in each manhole. Splices should be custom-made at each site by an experienced cable splicer using customized splicing kits from a reputable cable manufacturer. All splices should be started and carried through to completion without interruption, usually taking about 8 hours. EPR cable shall not be spliced to paper-insulated lead-covered (PILC) cable.

The EPR cable shall be 500 KCMIL,15 kV single copper conductor, shielded 90 °C and rated with a 100 percent insulation level. The strand screen shall be extruded semiconducting EPR meeting or exceeding the electrical and physical requirements of ICEA S-68-516, AEIC CS6, and UL 1072. The shield shall be 5 mil-thick bare copper tape helically applied with a 12.5 percent overlap. The jacket shall be a polyvinyl chloride (PVC) jacket. The cable shall be UL listed as Type MV-90 in accordance with UL 1072. Each feeder shall consist of three single-conductor cables, plus a ground wire as described hereinafter, or a three-conductor cable with an integral ground.

Where EPR cable is installed, it shall have a copper ground conductor installed with the phase conductors. The ground conductor shall be No. 1/0 AWG minimum.

K.2.3 Distribution Duct System (DDS): The NIH Bethesda campus has two underground duct and manhole systems: one for electrical power cables and one for communication circuits. The DDS for electrical power has manholes designed with the letter “E” followed by a number (one to three digits). Where a duct line branches off an existing manhole, the new manhole will have a subletter designation. For example, the existing manhole is E-29, and two new manholes, E-29A and E-29B, are added on the same branch. The manhole designations for communications manholes will be discussed in General Design Guidelines, Section: Communications, Local Area Network.

The ducts contain only high-voltage feeders, rated 15 kV for use on the NIH nominal 13.8 kV system, and supervisory cables that monitor and control the high-voltage system. The older supervisory cables, which are in the process of being replaced, were multiconductor control cables. The NIH has continued a process of replacing

these cables with smaller diameter data links over fiber-optic paths in the existing campus local area network (LAN) cables and over telephone lines.

The area surrounding manholes in grass areas shall be regraded to drain away from the manhole cover. Manhole covers shall be 13 mm above finish grade. Manholes shall be provided with a sump approximately 300 mm x 300 mm x 150 mm deep. Preferably, manholes should be located in grass areas first, sidewalks second, and in the street last. Manholes shall not be located in parking spaces. Where ducts are sloped from a high to a low manhole, they shall be sealed at the high end only to allow condensation to drain. Cables in manholes shall be labeled with embossed brass cable tags and brass chains. Manholes shall be provided with two manhole covers, one for forced air and materials entry and the other for worker access. The standard manhole frame and cover shall be 700 mm in diameter (600 mm inside diameter). Manhole covers shall be labeled "ELECTRIC" for power and "TELEPHONE" for communications. The cover shall have a small, flat area for labeling, with the manhole number applied by a welded bead. An embossed brass tag with the manhole number shall be permanently mounted inside the chimney and legible from outside the manhole with the cover removed.

K.2.4 Elevation Considerations: The DDS consists of multiple duct runs between manholes of 155 mm inside diameter PVC Schedule 40 ducts with a concrete encasement. The encasement has steel reinforcement in a plane just below the lowest row of ducts where the duct run spans disturbed earth, where it enters manholes and buildings (out to 1.8 m), and where it crosses under heavily traveled roadways. The spacing between ducts is 75 mm in all directions. The ducts shall be 760 mm minimum clear below grade or top of roadway.

Duct runs shall be sloped from the higher manhole entrance to the lower manhole entrance with no intermediate low spots that would pool moisture. If manhole entrance points are on about the same level, then there must be an arch in the duct run so that there is drainage from a high point into both manholes. If a low point is absolutely unavoidable, another manhole shall be provided at or near the low point.

K.2.5 Grounding: Each manhole shall be equipped with a 3 m-long, 20 mm copper-clad steel ground rod through the floor of the manhole, with all metallic components in the manhole, such as racks, cable sheaths, or ladder, securely grounded to this rod with a #6 American Wire Gauge (AWG) green insulated cable.

K.2.6 Maximum Length Between Manholes: The maximum cable length between manholes shall be kept to less than 120 m for an essentially straight run and reduced by 15 m for each bend of 0.79 radians and by 30 m for each bend of 1.6 radians. Bends shall be made with the largest radius possible. This by no means releases the A/E or the contractor from doing the necessary cable-pulling calculations to ensure that the maximum tension or sidewall pressures are not exceeded.

K.2.7 Spare Capacity: When new duct runs and manholes are installed, additional ducts shall be provided for future expansion. There shall be at least two spare ducts included with the required ducts, more if this will round out a duct bank to a symmetrical configuration. Odd numbers of duct, such as 7, 11, or 13, shall not be constructed.

K.2.8 Normal Power: The *NEC* load figures shall be used in sizing the overall building service for an office building. For load figures on laboratories, animal research facilities, and hospitals, see the respective sections. The connected load shall be used in the early design stages. Actual design loads shall be used in the later part of the design. The mechanical loads do not include chilled water or steam generation, which are produced centrally on the NIH Bethesda campus. The A/E shall use sound judgment in applying load calculations to these numbers.

Table K.2.8 Load Calculations

Load	VA/m^2
Lighting	27-32
Receptacles	32
Heating, ventilation, and air conditioning (HVAC)	22-43
Elevators	5-11
Miscellaneous	11
Total range	97-129

K.2.9 Network Transformers and Spot Network Equipment: The typical building service should utilize a three-transformer spot network. Each transformer shall be sized for 50 percent of the total building load, including any spare or future capacity. Building 10 has multiple services with both three- and four-transformer spot

networks. See Figure K.2.9. All liquid-filled transformers shall be provided with Factory Mutual-approved, less flammable natural ester similar to Envirotemp FR3 or approved equal.

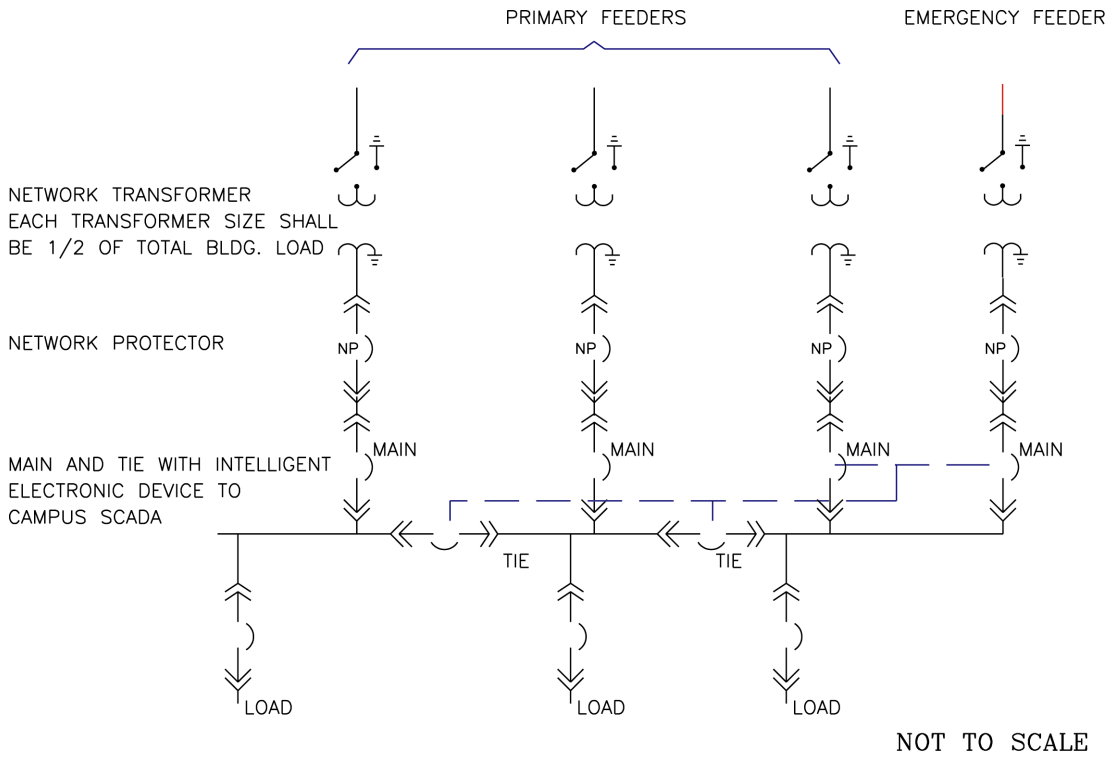

Figure K.2.9 Single Line Diagram: Typical Building Service

Limit main and tie circuit breakers and busing to 4 000 A or less in any spot network configuration.

The spot network configuration shall be sized to allow one network transformer to be removed from service, with the remaining spot network transformers capable of carrying the entire load indefinitely without transformer-forced cooling, plus an additional 25 percent spare capacity designated for future modifications on the electrical power distribution system.

Each secondary spot network shall include a primary 15 kV switch, network transformer and a secondary network protector and disconnect device. The manufacturer of the spot network substation shall furnish and coordinate all major components of the substations, including incoming primary equipment section,

network transformers, and low-voltage network protector and disconnect device as well as control devices, protective relays, and metering components. A single warranty covering all substation assemblies, transformers, and components should be provided. The spot network substation shall be designed, assembled, tested, and installed in accordance with the latest applicable standards of NEMA, IEEE, and ANSI applicable to network transformers and network protectors. The network protector shall be a maximum-rated device as manufactured by Cutler-Hammer. The network protector shall be a fully interlocked, dead-front, draw-out design with externally mounted fuses for easy removal of the unit from enclosure for maintenance and inspection by operating hand-cranked levering system. Relay and control panels shall be mounted on draw-out control module below network protector element. Protectors shall comply with the IEEE C57.12.44 standard. The network protector shall have a mechanism controlled by a toggle-cam device that will not allow closure of the contacts until the springs contain sufficient energy to close and latch the contacts onto available fault current. Each network protector shall have a disconnect switch mounted on top of or on the opposite wall from the network protector. The disconnect is a maintenance isolation switch for working on the network protector. Disconnecting links are no longer allowed for safety reasons.

Each network protector shall be provided with an Intelligent Electronic Device (IED).

IED shall be the three-phase type with relay functions to provide selective closing and tripping of auxiliary contacts mounted on the relay and interfaced with the protector circuitry. The relay close contact shall close if the ensuing positive sequence power will be into the network. The relay trip contact shall close when there exists a net three-phase balanced reverse power flow through the network protector. The trip contact shall also close upon flow of reverse magnetizing current of its associated transformer.

The relay shall be enclosed in a NEMA Type 6 chemically treated, waterproof drawn brass shell, and any wiring to the relay (including communication wire) shall not compromise the rating. The relay shall offer three on-board input ports that are used for external sensors when combined with the communication package. The relay shall offer internal air temperature with the communication package. The relay shall utilize the capability of choosing from the traditional straight-line master close curve and the modified circular closed curve. The relay shall utilize insensitive phase rotation.

The microprocessor relay shall operate under the sequence-base algorithm, which provides a flat, unchanging trip response. The relay shall operate in a temperature range of -20 to +110 °C with exertions to +125 °C. The relay shall have the capability to communicate information to a data concentrator over a shielded twisted pair communications wire.

K.2.9.1 Location: The transformers should preferably be located indoors in a transformer vault. The alternate location is outdoors in a pad-mounted configuration.

Transformers located indoors shall preferably be in the same room (vault) as the secondary switchgear or in an adjacent transformer vault. Pad-mounted network transformers shall be located outside the service entrance switchgear room. The secondary service conductors shall be kept as short as possible.

K.2.9.2 Removal Route: The size of transformers and the requirements for power reliability at the NIH require that there be an exit route specified for these large, heavy items of electrical equipment. The A/E of the building must provide for a permanent exit route to remove these large items and bring in new units. Note that the faulty unit must be removed while the other one, two, or three transformers remain in place and in operation. The suggested method is to use painted stripes and warning signs on the floor and walls along the exit route.

K.2.9.3 Primary Switch: The 15 kV primary switch is a three-position, no-load break switch. The three positions are OPEN, CLOSED, and GROUND. The closed position is the center position. The switch is key interlocked with the transformer tap changer mechanism such that it must be in the ground position before the transformer taps can be changed.

K.2.9.4 Transformer: Transformers shall have temperature gauges with resettable maximum pointers, sampling valves, high-pressure release valves, and a key-interlocked tap changer. The transformers shall be filled with an approved less flammable natural ester liquid similar to Envirotemp FR3 or an approved equal. The tap changer shall have five settings, two above and two below the 100 percent rating. Each tap shall represent 2.5 percent of nominal voltage. Transformer windings shall be copper and full kVA rated.

K.2.9.5 Network Protector: The network protector shall contain time delays and other controls to prevent “pumping,” which is the cyclical opening and closing of the

network protector. Spot networks shall include a remote terminal unit (RTU). The RTU is a multiplexing device that sends monitoring and control signals from the respective building to the campus-wide Supervisory Control and Data Acquisition (SCADA) system.

The RTU shall be located in either the transformer vault or the secondary switchgear room and requires a 120 V circuit. The output control voltage is 48 V DC. The network protectors shall have auxiliary relays with 48 V DC coils for shunt tripping by the RTU. The RTU should include monitoring the following devices/functions:

- Pressure and temperature of liquid-cooled network transformers
- Status of network protectors
- Status of all secondary main and tie circuit breakers
- Status of any battery bank systems in substations

The RTU should include controlling the following devices:

- Tripping of network protectors
- Opening and closing of secondary main and tiebreakers

The RTU shall include analog inputs to measure:

- All secondary switchboard metering

The RTU is provided with a number of analog and digital sensing points, as well as a number of relays for the control functions. The number of points can be augmented in the future as additional points are needed or defined.

K.2.10 Secondary Switchgear: Secondary low-voltage switchgear shall be the freestanding, metal enclosed type. The switchgear shall have a main circuit breaker on the secondary of each unit substation transformer. Circuit breakers shall be draw-out air power circuit breakers or draw-out vacuum circuit breakers. The switchgear shall be the ANSI metal enclosed, draw-out type. Spare cubicles, minimum one cubicle per frame size utilized in the switchgear lineup, should be provided. All spaces shall be fully bused based on frame sizes required to be indicated on design drawings, including draw-out assemblies, bused connections, and hardware. Molded case circuit breakers are not allowed in switchgear construction. All cubicles shall be complete, with buswork, rails, wiring, and circuit breakers. All buses shall be copper.

The switchgear shall be positioned to allow for the addition of a minimum of one vertical section to the switchgear provided that switchgear capacity is not exceeded.

The electrical arrangement of the switchgear is shown in single-line form in Figure K.2.9. The switchgear shall have a main circuit breaker for each network protector. Each main circuit breaker shall serve a section of the main bus. The sections shall be connected by tie breakers of the same ratings as the mains. The main and tie breakers are normally closed and electrically operated. The normally closed breakers form a spot network. The tie breakers will sectionalize the main bus should a fault occur, thereby minimizing the outage to one section of bus. The breakers are electrically operated to allow remote operation by the campus SCADA system.

Circuit breaker selection shall accommodate the inherently high-available short-circuit interrupting current in a spot network system arrangement.

Where automatic transfer is provided, the secondary main breakers and tie breaker shall be electrically operated with manually and electrically operated trips. Feeder circuit breakers shall be manually operated. Where automatic transfer is not provided, all breakers shall be manually operated.

For a spot network system, a unique dual ground bus arrangement is required for proper selective ground fault operation and isolation of a fault.

Where ground fault protection is required on main circuit breakers, it shall also be provided on feeder circuit breakers to provide selective tripping of the breaker closest to the fault. The switchboard shall be provided with a digital power meter measuring total power output of the switchboard.

The control power for low-voltage circuit breakers shall be 120 V AC. Over-current devices shall have short-time, long-time, ground fault, and instantaneous trip settings. Each incoming line shall be provided with overvoltage and undervoltage and phase sequence protection.

Digital readout metering shall be provided on the load side of each main circuit breaker. The following minimum metering is required:

- Volts (phase to phase and phase to neutral)
- Frequency

- Ampere demand (per phase and average three-phase)
- Kilowatt hours (resettable)
- Kilowatt demand (three-phase)
- kVA demand (three-phase)
- Harmonic load content (percent THD)
- Power factor

The above-mentioned local metering is in addition to the required SCADA metering, monitoring, and control system.

The switchgear shall include the provision of a control power transformer associated with each switchgear section and the necessary switching logic so that there will be 120 V relay and control power if any one of the three network transformers is energized.

The breakers in the secondary switchgear shall be either draw-out air circuit breakers or draw-out vacuum circuit breakers. Molded-case circuit breakers are not allowed. Switchboard construction is not allowed. Each breaker shall have self-contained local digital metering with remote reporting capability. The following values shall be metered:

- Volts (phase to phase and phase to neutral)
- Amperes
- Kilowatt hours (resettable)
- Kilowatt demand
- Kilowatt peak demand

Each switchgear lineup shall have a hoist provided for lifting the circuit breakers from their withdrawn position and lowering them to a dolly or to the floor. A rail assembly shall be provided along the top of the switchgear with a hoist mechanism that can roll from end to end. Spaces in switchgear shall be fully bused. Spaces shall have insulated covers over bus stabs and a complete draw-out mechanism ready for breaker installation.

Switchgears shall be located in electrical rooms dedicated to such use. No piping, ducts, or equipment foreign to the electrical equipment shall be permitted to be

installed in, enter, or pass through electrical rooms in accordance with NEC requirements.

Electrical equipment that requires specialized tools for installation, maintenance, calibration, or testing shall have such tools supplied with the associated equipment and turned over to the Project Officer for delivery to the NIH Electric Shop at the end of the construction project. These tools can be as simple as a special screwdriver for vandal-proof lighting fixtures or the very complex test and calibration equipment needed to maintain solid-state circuit breakers. The argument that says tools are proprietary is not acceptable, and withholding the tools shall be cause for nonacceptance of the respective equipment.

K.2.11 Distribution Transformers: Distribution transformers shall be delta primary with solidly grounded wye-connected secondary. The transformer shall have self-cooled capacity for 100 percent load plus 25 percent capacity for future load after completion of construction. Liquid-filled transformers shall be filled with an approved less-flammable natural ester similar to Envirotemp FR3 or approved equal. Liquid-filled transformers shall be provided with liquid level, pressure/vacuum, and temperature gauges with alarm contacts.

K.2.12 Load Segregation: Wherever possible, loads shall be segregated into like groups based on function or type of load. Examples of functions are laboratories, offices, health care, animal research facilities, and so on. Examples of types of loads are computers, motors, lighting, receptacles, and so on.

K.2.13 Work Space: The following clearances are required on new projects around secondary switchgear:

- 1 500 mm in front minimum
- 1 100 mm in rear minimum
- 900 mm on the ends minimum

Renovation projects shall have at least the code minimum clearances.

All substations, switchboards, transformers, and, in general, panelboards, shall be installed in dedicated electrical rooms or closets or, if outdoors, in areas protected against physical and water damage. Pipes and ductwork shall not be routed through electrical rooms or closets. Pipes or mechanical ducts shall not be routed directly

above electrical equipment. At least one duplex receptacle and 25 percent of the lighting fixtures in electrical rooms, electrical closets, communication rooms, communications closets, and mechanical rooms shall be connected to emergency power, if available. Each electrical room and electrical closet shall have at least one receptacle, and each communication room and communications closet shall have at least two receptacles installed. A finished ceiling is not required. Electrical and communication rooms and closets shall be located central to the loads served.

Electrical rooms containing substations or switchboards shall be sized to provide clear space around the equipment. Where located within buildings that are air conditioned, such rooms shall be air conditioned, if practicable. In other locations, the room shall be ventilated to maintain the temperature at not less than 8 °C and not more than 33 °C and the humidity at a noncondensing level. Ventilation shall be filtered forced air.

Adequate space shall be provided for the installation and removal of equipment without requiring disconnection of any other equipment except that which is specifically connected to the piece of equipment to be removed. Where columns are within the rooms, they shall not encroach on the space required around equipment.

Electrical closets shall be provided in sufficient quantity, size, and location to allow for top and bottom conduit entry and exit from the closet. Space shall be provided in electrical closets for installation of future conduit and equipment. Closets containing transformers or other heat-producing equipment shall provide adequate ventilation.

K.2.14 Voltage: The standard voltages on the NIH Bethesda campus are:

Table K.2.14.1 Standard Voltages

Size	Phase	Wire	Voltage
13.8 kV	3	3	Primary voltage
4 160/2 400 V	3	3	Large motor voltage, power plant only
480/277 V	3	4	Preferred secondary voltage; optional secondary service voltage and receptacle and 120 V utilization voltage

- Lighting fluorescent or HID 277 V (120 V, if building service is 120/208 V)
- Incandescent lamps (may be used only if noted in program of requirements) 120 V
- Heating (electrical heating only if a request for variance is made and approved)

Table K.2.14.2 Electric Heat Voltage and Phase

Size	Phase
Above 3 kW	3 phase
Between 3 and 1.5 kW	Single phase
Less than 1.5 kW	120 V, 1 phase

Table K.2.14.3 Motor Phase

Size	Phase
1/2 hp and above	3 phase
1/3 hp and below	Single phase

Motors furnished at single phase as integral parts of variable air volume terminal units are acceptable for all horsepower (hp) ratings.

The secondary service voltage selection shall be based on load. The preferred voltage is 480/277 V. Typically a building load of 750 kVA or less could operate on 208/120 V unless there are compelling reasons to use 480/277 V. An economic analysis shall be performed to determine the best choice of voltage rating where the decision is unclear.

If 480/277 V is the chosen voltage, then a decision must be made where the transformation is to occur for 208/120 V loads, either at centrally located transformers or at dispersed smaller transformers close to the load. An economic analysis shall be performed where the choice is not clear.

K.2.15 Reliability: The A/E shall evaluate the degree of reliability required for a given project. Design issues such as separately routed primary feeders, two versus multiple network transformers, transformer placement, and switchgear location all bear on the reliability issue. Emergency power choices will be discussed in that

section. The value of the work being performed in the given building and the impact on research due to an outage must be considered.

K.2.16 Testing: Acceptance testing of primary cable, primary switches on network transformers, network protectors, secondary switchgear motor control centers, generators, and automatic transfer switches shall be performed in accordance with NETA specifications. The minimum tests required for the given equipment are shown in Table K.2.16.

Table K.2.16 Tests Required for Electrical Equipment

Equipment	Test
15 kV Cable	Insulation resistance
15 kV Oil switch	Visual Contact resistance Insulating liquid
Network transformer	Visual AC high-potential test on primary windings and switch Insulation resistance (2 500 V megger) on primary and secondary windings Turns ratio on all tap positions Insulating liquid Envirotemp FR3 oxygen percentage FR3 (six individual tests) including dielectric breakdown voltage FR3 dissolved gas analysis
Network protector	Visual and mechanical Insulation resistance Current transformer ratio Contact resistance Minimum pickup voltage
Secondary switchgear	Visual and mechanical Insulation resistance High potential Instrument transformers
Power circuit breaker	Visual and mechanical Insulation resistance Pickup and time delay values Operation

Equipment	Test
Motor control center	Visual and mechanical Insulation resistance Overload Bus and starters
Grounding electrode	Fall of potential
Ground fault	Visual and mechanical Neutral to ground resistance Pickup and time delay
Generator	Visual and mechanical Insulation resistance Protective relay Phase rotation
Automatic transfer switches	Visual and mechanical Contact resistance Insulation resistance Relay settings Timer settings Operation

K.2.17 Wire Color Coding: Wire insulation shall be color coded. Branch-circuit conductors shall have colored insulation. Larger conductors shall be taped with the appropriate color tape for a minimum 150 mm starting from the termination. Each conductor of multiconductor cable shall be color coded in the same manner as single conductors. Color coding shall be as shown in Table K.2.17 for power conductors in the given voltage systems:

Table K.2.17 Color Coding for Wire Insulation

Power Conductor	208/120 V	480/277 V
Phase A	Black	Brown
Phase B	Red	Orange
Phase C	Blue	Yellow
Neutral	White	Gray

Power Conductor	208/120 V	480/277 V
Ground	Green	Green
Isolated ground	Green with yellow tracer	not applicable

Color coding for control cables may be of a uniform color provided permanent, numbered tape markers are placed on both ends and splice points of each conductor.

Direct burial of power and signal cables shall not be allowed. Where an existing direct-buried street lighting circuit is being extended one or two poles, the circuit may be direct-buried. Where the cable is direct-buried, it shall be protected the full length by 25 x 150 mm nominal pressure-treated lumber 150 mm above the cable. The cable shall be buried 750 mm below grade. Plastic cable-marking tape 150 mm wide shall also be installed 300 mm below grade. The plastic marking tape shall be red or yellow and read "CAUTION: BURIED ELECTRIC LINE." Where new circuits, street lighting or otherwise, are installed underground, they shall be placed in PVC Schedule 40, rigid galvanized steel (RGS), or PVC-coated RGS conduit.

K.2.18 Conduit: Conduit should be classified by a nominal transition to metric.

Table K.2.18 Conduit Size Transition

Size	
Inches	Millimeters
½	16
¾	21
1	27
1¼	35
1½	41
2	53
2½	63
3	78
3½	91
4	103
5	129
6	155

Conduit shall be metallic to provide a redundant ground path. PVC or aluminum conduit is not acceptable except as noted below. PVC conduit may be used in underground applications and shall be used in concrete ductbanks.

All service and feeder conduit routing shall be clearly shown on the contract drawings. Homerun with panel designation and circuit numbers should be provided for circuiting. Provide the circuit number next to each arrow. All switchlegs and circuit continuations shall be indicated on the contract drawings. The contract drawings shall clearly indicate where conduits are to be installed in an exposed manner and where they are to be installed in a concealed manner. The couplings used on electrical

metallic tubing (EMT) shall be the rain-tight compression type. Setscrew couplings are not allowed.

The minimum conduit size shall be 21 mm. Surface-mounted conduit in washdown areas shall be IMC or RGS with threaded couplings. Flexible metal conduit (Greenfield) shall be used for lighting fixture connections (whips) and for connections to equipment subject to vibration, noise transmission, or movement. Lighting fixture connections shall be made with minimum 1.2 m and maximum 1.8 m lengths of flexible metal conduit in accordance with NEC 410-67. Liquid-tight, flexible metal conduit shall be used for motor connections and undercabinet lighting. Raceway systems shall be provided for all wiring.

K.2.18.1 Conduits (Within Buildings): The minimum-size conduit shall be 21 mm except as indicated for flexible conduit. All conduit shall be installed parallel with the building features, except for conduit run in or under the slab. Conduit shall not be installed in the slab on grade. Fittings for metallic conduits shall be compression-type steel or malleable iron. Conduit shall not be attached to box covers, except for 15 mm or smaller flexible conduit terminated on a flush-mounted box cover. All service and feeder conduits shall be marked with machine-made labels every 15 m indicating their use. All conduits shall be supported independent of other systems and equipment and shall be supported with approved devices (tie wire is not acceptable). Conduit shall not be run exposed on top of roof surfaces.

In addition to the requirements of codes, conduit shall be installed as specified below.

RGS conduit with threaded fittings shall be used in the following locations:

- Elevator shafts, all exterior areas, and other areas where physical damage is probable.
- Where exposed within 2 400 mm of the finished floor level and a point above 2 400 mm past the vertical to horizontal transition.
- Biosafety Level 3 and 4 areas.
- Where exposed in animal research and animal holding facilities.
- Where exposed in parking structures.

PVC schedule 40 nonmetallic conduit shall be used in the following locations:

- Below concrete floor slab on grade.
- Within concrete walls or within floors above grade.
- Where elbows are terminated above slab, provide RGS elbows.
- PVC conduit stubbed out of floors shall transition to RGS raceway prior to the point where the conduit is exposed.
- RGS conduit may be substituted for PVC schedule 40.
- Electrical metallic tubing (EMT) may be used where allowed by code in all other interior spaces. All fittings used with EMT shall be compression type.

Aluminum conduit should be used in magnetic field, e.g., MRI, NMR, areas.

Steel modular surface metal raceway may be used in offices, laboratories, and similar applications where appropriate and when an area is classified as a dry location.

Cable tray may be used where dedicated for communications wiring or where dedicated for racking medium-voltage cabling (subject to the approval of the NIH).

See Conduit Support Detail, Figure K.2.18.1 below.

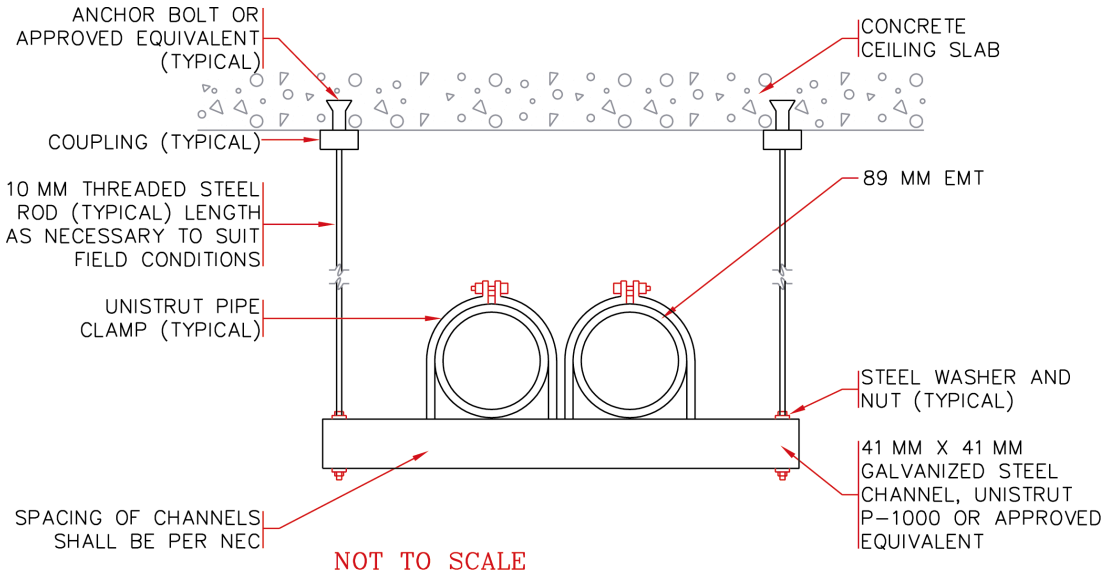

Figure K.2.18.1 Conduit Support Detail

K.2.18.2 Raceways (Underground): All underground conduits shall be PVC or RGS. Conduits shall be concrete encased when buried beneath roadways or when used for medium-voltage applications. Minimum size for conduits used for medium voltage shall be 129 mm. Generally, conduits serving exterior pole-mounted lighting fixtures shall be 53 mm in size. Direct-buried conduit is acceptable for electrical systems rated 600 V and below. Rigid steel may be direct-buried if coated with asphalt paint or PVC.

PVC electrical conduit for underground runs shall be a minimum of type EB if concrete encased or schedule 40 if direct-buried. Marking tape indicating "ELECTRICAL CABLE BURIED BELOW" shall be installed in accordance with the latest applicable industry standards. All empty ducts shall be provided with 4 mm minimum diameter nylon pull wire for pulling future cables.

All empty ducts shall be sealed to prevent water seepage into the handhole or manhole. Ducts shall be sloped to prevent water drainage into the building.

Prior to pulling cable into any conduit (whether new or existing), the conduit shall be cleaned with a wire brush 16 mm larger than the duct and rodded with a mandrel 8 mm smaller than the duct to test the integrity of the duct.

K.2.19 Manholes and Handholes: Manhole and handhole spacing shall be as required by code and by wire-pulling requirements but not more than 150 m apart. The minimum inside dimension of manholes shall be 3 700 mm x 2 750 mm x 1 980 mm. Handholes shall be minimum 610 mm x 610 mm x 610 mm.

Handholes shall have steel covers. Handholes shall not be used on medium-voltage power systems. Covers shall be grounded. All cables shall be racked on nonmetallic cable racks designed for installation on walls of manholes. Handholes and manholes in streets shall meet Maryland Department of Transportation Standards.

K.2.20 Surface Metal Raceway: Surface metal raceway shall be metallic; plastic is not acceptable. The nominal dimensions of the raceway shall be:

Table K.2.20 Raceway Dimensions

Raceway Type	Dimensions (mm)
Single channel	70 x 38
Two channel	120 x 44
Two channel	120 x 90

Emergency circuits shall not be wired with normal power in the same raceway. Power and communications shall be in separate channels.

K.2.21 Busway: Busway shall have all copper bus; maximum ampacity for one busway riser should be limited to 2 000 A. Aluminum busway shall not be acceptable. Ventilated busway shall be installed in dry locations not subject to moisture. Non-ventilated busway may be installed in wet or dry locations. The contractor shall be responsible for field-measuring for the busway prior to ordering. See Busway Vertical Riser Detail, Figure K.2.21, below.

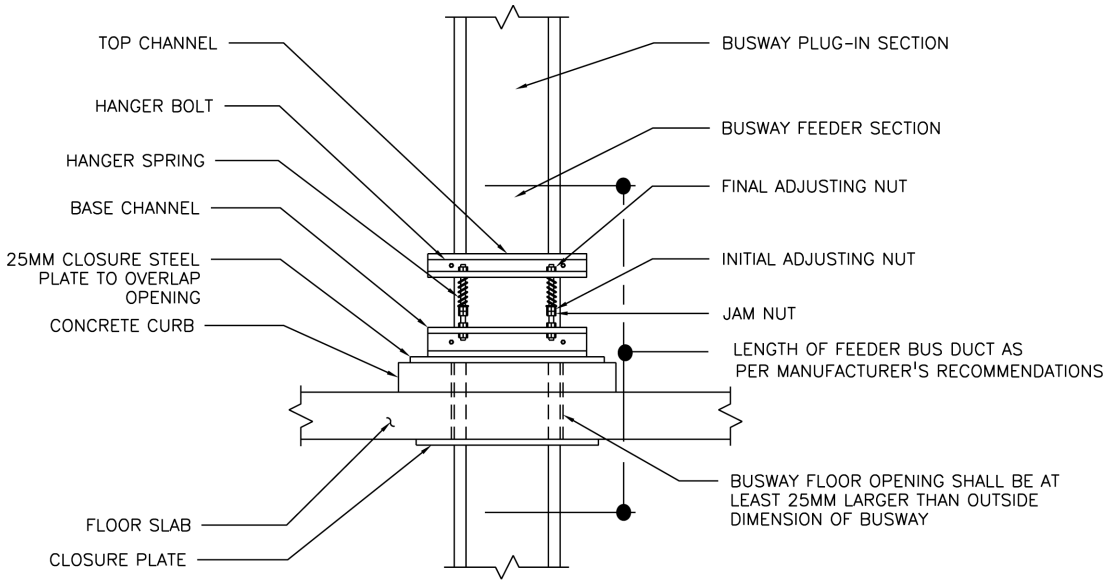

NOT TO SCALE

Figure K.2.21 Typical Busway Vertical Riser Mounting Detail

K.2.22 Cable Tray: Galvanized steel is the preferred material to be used in ladder cable-tray construction for power cables. Ladder or center-spine cable-tray construction is acceptable for communications cable. Other materials such as PVC-coated steel and aluminum will be considered. Cable trays shall consist of factory-manufactured units that bolt together in the field. Fabrication in the field, other than the shortening of a single straight section, is prohibited. Ventilated tray bottoms, in lieu of ladder rungs, are not acceptable.

Cable-tray locations shall be coordinated with adjacent utilities so that the tray will be accessible for adding or removing cables in the future. Routing shall also be adjusted so as not to obstruct access to other utility items that would routinely require access for maintenance or adjustment.

The cable trays shall be supported directly from the building structure above wherever possible. The spacing of the support points shall be as recommended by the cable-tray manufacturer. A minimum #6 AWG grounding conductor run continuously in the cable tray should be bonded to each section.

Cable trays shall not be allowed through fire-rated walls. A minimum of two 103 mm RGS sleeves with insulated bushing extending minimum 150 mm on each side of the fire-rated wall should be provided.

K.2.23 Panelboards: Circuit breakers shall be the bolt-on type. Plug-in breakers are not acceptable. The breaker shall have a published ampere interrupting rating at 125/250 V DC. This latter requirement is sometimes referred to as requiring an

E-frame breaker. (A DC rating for one-pole and two-pole breakers shall be assumed by the NIH to extend to the three-pole device as well, for purposes of this requirement.)

Every panelboard shall have a main breaker in the same enclosure, closet, or room. The main breaker can be likened to a local disconnect and must be readily accessible should the panelboard need to be de-energized in an emergency situation. **Single-pole breakers shall not be ganged to form multi-pole breakers. Series-rated equipment is not acceptable.**

The panelboard directories shall be typed and shall reference the actual room numbers for the circuits. This shall be specified as part of the contractor's

responsibility regardless of room numbers used on the drawings. The directory shall list the panelboard name and the name of the panel fed from.

New panelboards shall allow for 25 percent future load capacity. New panelboards shall contain 25 percent spare circuit breakers after completion of construction. The spare breakers shall be left in the “OFF” position, and the panelboard directory card shall list the word “SPARE” for these breakers. New panelboards shall contain space for future circuits that amount to at least 25 percent of those required in the initial design.

Panelboards shall be located in electrical rooms or closets with code-required clearances and 76 mm minimum separation.

Bathrooms, labs, or other rooms requiring floor drains or plumbing in the floor shall not be located above electrical rooms or closets. No pipes, ducts, or equipment foreign to the electrical equipment shall be installed in, enter, or pass through electrical rooms or closets.

Branch circuits shall not be served from panelboards located in an adjacent building, area, wing, or a different floor, except for buildings with interstitial utility distribution where branch-circuit panels are located on the interstitial floors.

Panelboards shall be labeled with name and feeder source panel or riser source location. The nameplate shall be a phenolic laminate with engraved black letters on a white surround. Emergency panels shall be white letters on red surround. The panel name shall have 13 mm high letters. The words “FED FROM PANEL XX OR SWGR XX” shall be 7 mm high on a line below the panel name.

Panelboards shall have a 100 percent neutral bus and a ground bus, and all buses shall be copper. Panels serving high harmonic load content (50 percent nonlinear load) shall have a 200 percent neutral bus. All panelboard breaker busing (extension fingers), including spaces, shall be rated for 100 A minimum.

Distribution panels shall be defined as those panels serving branch-circuit panelboards and other three-phase loads. Distribution panels shall be labeled “DP-1, 2, 3,” and so on. Table K.2.23 shall be used in sizing distribution panels for future space allocation.

Table K.2.23 Distribution Panel Sizing

Maximum Active Poles	Minimum Spare Poles	Total Poles
12	6	18
24	6	30
36	6	42
42	24	66
66	as required	66

Branch-circuit panelboards shall have 42 poles regardless of bus ampacity. Branch-circuit panelboards shall be three-phase, four-wire, with ground bus and all copper busing.

Panelboards 400 A and above shall be provided with a hinged trim feature with a full-height piano hinge. The trim shall hinge open with the removal of a few screws. The panel door giving access to the circuit breakers only shall have a flush tumbler lock. All panelboard doors shall be keyed alike.

K.2.24 Electrical Closets: Electrical closets generally contain branch-circuit panelboards. The closets require adequate space for code-required clearances, lighting, ventilation, and two duplex receptacles. In new work and complete renovations, electrical closets shall be minimum 1.5 x 2.4 m for closets without transformers and minimum 1.8 x 3 m for closets with transformers. Closets with transformers shall have ventilation (and/or cooling) sufficient for 2 percent of the total transformer kVA expressed in watts of heat load. Electrical panelboards shall be located such that the farthest 120 V device served is within a 23 m radius of the closet. A square superimposed in a 23 m radius circle has an area of approximately 900 m^2. Therefore, electrical closets shall generally be placed one for every 900 m^2 of area served by 208/120 V branch-circuit panelboards. Loads served with 277 V shall be no more than a 30 m radius from the closet. Converting to area, lighting panels shall be placed approximately one every 1 800 m^2. Obviously, building configuration will change the area/closet, but the 23 m rule shall be maintained to avoid having to increase branch-circuit wire size for voltage-drop reasons.

If this closet space is not available in small renovation work, shallow closets with full doors on the long wall are acceptable in corridors. Panelboards in laboratories and

animal research facilities are generally located in service corridors and do not require closets.

Electrical closets within multistory buildings shall be stacked. The closets shall not be located adjacent to mechanical shafts so as to avoid interference problems with ducts and conduits above the ceiling directly outside the closet. Mechanical ducts, piping, and work not serving the area shall not run through electrical closets as stated above per the *NEC*.

Lighting in electrical closets shall be one, two-lamp fluorescent strip for a small closet and two fixtures for a large closet. The lighting shall be connected to emergency power when available. One duplex receptacle shall be wired to emergency power and one to normal power in each electrical closet.

During renovation work, the designer shall not obtain new circuits from panelboards in remote areas or other floors of the building. Holes in the floors of electrical closets shall be sealed watertight. Wherever possible, the floor shall be provided with sleeves extending at least 70 mm above the floor.

K.2.25 Boxes and Wiring Devices: The color coding shall be as follows:

Table K.2.25 Color Coding

Receptacle Type	Color
Standard power receptacle	Ivory
Emergency power receptacle	Red
Isolated ground receptacle	Orange
Computer receptacle	Gray
Printer receptacle	Black

K.2.25.1 Special Requirements:

All electrical outlets in Pediatric Patient Care Units (PPCUs) shall be tamper proof.

Receptacles shall be installed so that the ground prong is mounted in the up position unless mounted 1.67 m above finished floor or higher. This is a safety requirement in

the event the plug is partially pulled out and something metallic falls on the prongs of the plug. Where isolated ground circuits are required, an isolated ground conductor shall be installed with the branch circuit. See General Design Guidelines, Section: Electrical, Power Quality, for panelboard-isolated ground bus requirements.

Offices shall have a minimum of one general (ivory) receptacle per wall.

In Building 10, Ambulatory Care Research Facility (ACRF), and Clinical Research Center (CRC), standard receptacle colors are ivory for normal power and red for emergency power. Receptacles for computers and printers shall be provided with engraved nameplates.

General-purpose receptacles shall have a design load of 180 VA each in accordance with the *NEC*. For circuiting purposes, a maximum of six receptacles shall be connected to a circuit. This allows for future expansion of two receptacles per circuit.

Personal computers (PCs) shall be limited to three per 20 A circuit. Printers shall be limited to two per 20 A circuit. Computer and printer receptacles shall not be connected to the same circuit nor to the general (ivory) receptacle circuits. These circuits shall be provided with dedicated neutral conductors.

GFCI receptacles shall not be wired to protect downstream receptacles except in indoor installations where the downstream receptacles are in the same room.

Tamper-proof, safety-type receptacles are required in pediatric, psychiatric, and child care areas. Tamper-proof receptacles shall operate with a two- or three-prong plug.

Special duplex or single receptacles to serve specific equipment or loads shall be indicated by NEMA configuration.

A 20 A duplex receptacle shall be mounted within 7.6 m of and on the same level as any electrically operated equipment on rooftops, in attics, and in crawl spaces. The receptacle must be on a separate circuit from that serving the equipment. Receptacles mounted outdoors shall be the GFCI type.

Boxes for interior electrical systems shall be hot-dipped galvanized steel or malleable iron and shall be compatible with the raceway system.

Duplex receptacles shall be specification grade rated at 20 A, 125 V, and be polarized parallel-blade-type with ground and NEMA 5-20R configuration. Receptacles in patient care areas shall be hospital grade. The mounting brackets shall be extra heavy, and the terminals shall be copper alloy. The receptacle shall be side-wired. Cover plates for receptacles, switches, and boxes shall be stainless steel or brushed aluminum. Receptacles shall be identified according to normal power, emergency power, or computer power with isolated ground.

Toggle switches used to control lighting shall be specification grade rated for use on 120 V and 277 V circuits and shall be rated for a minimum of 20 A.

Occupancy sensor switches shall be the multitechnology type combining both ultrasonic (US) and passive infrared sensing (PIR). These switches shall be used in offices, rest rooms, and conference rooms. For mechanical rooms and service areas, smart switches with timer controls shall be provided.

K.2.26 Demolition: If the work requires that wiring be removed from conduit that is not embedded in concrete and if that conduit is not scheduled for reuse on the same project, then the conduit is to be removed.

Exceptions:

- The lighting switchleg conduit is connected to the first outlet box if the wall containing the switch is to remain.
- Vertical conduit is connected to the first outlet box at panelboard if the panelboard is of the recessed type.

If the work requires that the wiring be removed from an embedded-in-concrete conduit and if that conduit is not scheduled to be reused, the conduit is to be abandoned in place. Conduit that enters the slab from below is to be cut, after the wires are removed, as close to the slab as practical but with not more than 19 mm protruding. Conduit that enters the slab from above shall have the floor material removed so that the conduit can be cut with a cold chisel at least 6 mm below the slab elevation. Then the conduit and enlarged opening shall be plugged with nonshrinking grout and the slab surface finished flat and true.

K.2.27 Disconnects: Disconnect switches shall have a minimum clear mounting height of 460 mm above grade outdoors and 1 m above finished floor in interior spaces.

K.2.28 Electric Heat: Electric heating will not be used to heat NIH buildings. Very limited use of electric heating will be permitted provided the engineering staff of the NIH Division of Engineering Services concurs that this is the only feasible solution to an atypical situation.

K.2.29 Nameplates: All electrical equipment shall have nameplates identifying the name of the piece of equipment or the name of the equipment served (e.g., disconnects, starters, etc.). Nameplates shall be laminated phenolic legend plates with white letters on black surround for normal power and white on red surround for emergency power. Nameplates shall have minimum 7 mm-high letters for small equipment and disconnects, 13 mm high for medium-size wall-mounted equipment such as panel boards and individual Size 2 starters and above, and 50 mm high for freestanding equipment such as large panelboards, switchgear, and liquid-filled transformers. The nameplates shall be attached with stainless steel screws. Where the equipment is remote from its electrical source, under the equipment name in smaller letters the words “FED FROM” followed by the source panel or riser name shall be included.

K.3 Emergency Power

Historically, the NIH has experienced outages of 1 hour or less once a year and outages of 4 hours or less once every 10 years. Generators are exercised weekly with a load bank, and automatic transfer switches (ATSs) are exercised monthly. The exercising of an ATS causes two momentary outages to the load, one going to diesel power and one returning to normal.

Generators shall be rated for 100 percent varying load standby rating.

Emergency loads are those that are considered necessary for life safety. They shall be wired separately from normal-powered, optional standby, and any other loads and provided with emergency generator or battery “backup” power. This category shall include:

- Emergency egress lighting
- Security and intrusion alarm systems
- Signage (egress only)
- Communication systems (including public address systems)
- Fire alarm systems
- Fire-suppression systems, such as deluge systems, CO_2 extinguishing systems, and kitchen hood fire extinguishing systems, shall be supplied with emergency power if it is available in the building.

Standby loads are loads for which it is desired to provide backup power to prevent damage to the facility, aid in rescue or evacuation, or aid in continuing operation of the facility in a limited capacity. This category also includes legally required standby loads. This category may include:

- Sewage ejector systems
- Additional lighting
- Critical exhaust and supply systems

The following loads are required to be connected to emergency power. These loads are in addition to any emergency loads that are required by code:

- Supply circuit (as required) for each uninterruptible power supply (UPS) provided by the user.
- Automatic temperature control system components.
- Auxiliary electrical system that supports the building heating system. The A/E shall study inclusion on emergency power and include on generator if required by program function.

The following loads may be connected to emergency power:

- Closed-circuit television cameras and equipment
- Security system

The requirement for emergency power for fire pumps shall be determined individually for each case, as required by NFPA 20 and *NEC*. The designer shall make a recommendation, which shall be submitted to the NIH for approval.

K.3.1 Generator: The preferred generator location is outdoors in a sound-attenuated enclosure with adequate working space around the generator. Consideration shall be given to diesel exhaust, feeder length, aesthetics, space requirements, ease of removal, air intakes, and so on, when locating the generator on the site. The sound-attenuated enclosure shall provide 70 to 79 dB maximum noise level 6 m from the enclosure at rated output regardless of generator size. Power and monitoring wiring shall be provided for the remote tank-level gauge. The generator enclosure shall have self-contained, battery-powered lighting on both sides of the generator(s) connected to emergency power.

The generator exhaust silencer, or muffler, shall be rated for minimum residential use or quieter to achieve the required sound rating. The location and direction of the engine exhaust shall not adversely affect air intake for the building. The preferred direction of the exhaust is up, from a sound rating standpoint. A hinged rain cap shall be provided on vertical discharge exhaust pipes.

Generators shall be ready to be exercised at the demand load or 60 percent of generator capacity, whichever is larger on a portable load bank, and per manufacturer's recommendations.

All necessary wiring for load bank testing with proper terminal connections should be provided. A shunt-trip circuit breaker should be provided for connection to the load bank. The load-dump control circuit in the load bank shall be wired to the transfer switch(es).

If the building calls for emergency power while the generator is being exercised by the load bank, the load bank circuit breaker shall immediately open, dropping the load bank from the generator bus. An onsite minimum fuel storage capacity of 24 hours run time at 100 percent load shall be provided. Fuel-tank leak detection shall be provided.

The fuel supply line from the storage tank to the day tank shall have a hand-operated pump of the crank type, as well as an electric pump in nongravity locations. The overflow line from the engine shall be returned to the storage tank, not the day tank. In gravity situations where the main fuel tank is higher than the generator, a "reverse day tank" (return storage tank) shall pump excess fuel back to the main tank. **Fuel lines shall not be routed on the surface of the floor or anywhere subject to wear or physical damage.**

The generator day tank and battery charger shall be connected to emergency power. The jacket water heaters shall be connected to normal power. Where an oil circulation pump is provided to circulate oil through the engine top end, it shall be connected to normal power.

The diesel distribution system is defined as the system delivering power from the generator to the emergency terminals of the ATS. Diesel power is normally dead until the generator is on line. Normal power is delivered to the normal terminals of the ATS. Emergency power starts at the load terminals of any ATS. Diesel power is distinguished from normal power, which is live normally, and emergency power, which is live all the time except during the brief engine startup period of 5 to 10 seconds.

Where two or more ATSs will be installed, an emergency diesel distribution panel (EDDP) shall provide for future addition of ATSs with minimal interruption to the diesel power system.

The number of switched poles (three or four) in a transfer switch shall match the existing number of switched poles where replacement or upgrade is occurring. The lifting of the generator neutral to ground bond shall comply with NEC requirements for three-pole, solid neutral transfer switches. New construction or complete renovation projects shall utilize four-pole switches on three-phase, four-wire systems. The generator neutral shall be grounded when using four-pole switches in accordance with NEC requirements.

ATSs shall have override switches to cause them to transfer to the other source only if it is a good source. A “good source” is defined as one with line voltage ±10 percent available and frequency of 60 Hz ± 0.5 percent. ATSs shall have manual operator handles for safe transfer of power source external manual operator (EMOs) to mechanically operate the ATS under load. Pushbuttons shall not be used as EMOs. The EMO shall transfer the switch to any position regardless of the condition of the source. ATSs without center off-time delay shall have an in-phase band monitor. ATSs shall have center off-time delay when serving motors. ATSs shall be located indoors. If a waiver is granted for an outdoor location, the ATS shall have door-in-door NEMA Type 4X construction with strip heaters inside the enclosure. The strip heaters shall be connected to emergency power. **The transfer switch shall be UL listed in accordance with UL 1008.**

The ATS shall be provided with a microprocessor-controlled, complete metering package supplied on the load side of the device. These digital meters shall monitor the load whether the source is normal or diesel power. Metering shall consist, as a minimum, of a voltmeter, all three phases simultaneously; ammeter, all three phases simultaneously; frequency meter; kW meter; and PF meter plus analog bar graph for easy reading of voltage and current.

The operating mechanism of the transfer switch shall be electrically operated and mechanically held. ATSs shall not be manufactured utilizing two circuit breakers with the trip handles physically connected. The connection points of the two inputs and the load shall be in accordance with UL 1008.

Bypass transfer switches shall be used where the load cannot be taken out of service or the scheduling of an outage is extremely difficult. Transfer switches shall be maintained once per year. With a bypass switch, the transfer switch can be taken out of service with only a momentary outage to the load. The user shall be made aware of the added cost of a bypass transfer switch so as to make an educated decision. The size of a transfer switch will also increase with the addition of the bypass function. The bypass switch shall be capable of manual operation to either source, under load, regardless of the condition of the source or transfer switch position. The manual operator shall be readily and permanently accessible without opening the enclosure door.

If site constraints are such that the generator must be located indoors, the following design requirements apply:

- Provide sound-attenuated room to suit the generator being installed and the surrounding occupancies.
- The design for the volume of air delivered to the interior space where a generator is located must include the combustion air that exits the exhaust stack and the cooling air that flows through the radiator. Note that the air that flows through the engine radiator is heated, and this expanded air, if used for combustion, will reduce engine efficiency.
- The cost of conditioning the air to be used for the needs of the generator dictates that outside air be used wherever possible. This requirement has no impact on combustion air, but cooling with outside air will require that the coolant in the generator contain a chemical antifreeze ingredient.

- The outside air intake for combustion air shall be coordinated so that there is little chance that building exhaust (which might contain smoke in a fire situation) will be drawn in for combustion air.
- The ventilation air intake shall be coordinated so that it does not draw in engine exhaust.

Where the engine exhaust from the indoor generator exits the building through a wall or penetrates interior floor slabs or the roof, an insulating thimble must be used to protect adjacent materials from the excessive heat that would be created by full-load operation. The design that places a generator within a new building must also provide a suitable exit route for removal of this equipment should replacement be necessary in the future. This route shall be clearly delineated on the drawings and in the field by painted lines on the floor, walls, and so on.

The air for either cooling or combustion purposes shall be primary filtered as it enters the building from outside. The engine filter shall be considered a second and final filter for indoor units.

A duplex receptacle on the emergency system shall be placed in the corridor within 6 m of each stairwell entrance. This receptacle is primarily for the use of the NIH Fire Department in emergency situations and shall be so marked with appropriate signage so that the receptacle will not be blocked or hidden by equipment.

Corridor Receptacles: One single 20 A three-wire twist-lock receptacle (NEMA Type L5 20R) shall be installed at least as high as and 600 mm offset from the hose connection outlet to each standpipe. The receptacle shall be located in the corridor adjacent to the stairwell. Additionally, these receptacles are required at maximum 30 m intervals in long corridors. Each outlet box shall be painted fire-alarm red in color and be marked “ONLY FOR FIRE DEPARTMENT USE.”

Standpipe Receptacles: Any building requiring standpipes shall have installed one 30 A, 120 V circuit for each standpipe riser to the above-listed twist-lock receptacle. The receptacle shall be supplied from the emergency panel. The outlet box shall be painted fire-alarm red and be marked “ONLY FOR FIRE DEPARTMENT USE.” The wiring method for exposed work shall be RGS conduit. Boxes shall be metal, weatherproof type, with gasketed flap-door covers and threaded hubs. The wiring method for concealed work shall be conduit with appropriate galvanized boxes having gasketed flap-door covers suitable for Fire Department use.

K.3.2 Bypass Breaker: A bypass circuit breaker may be provided so that in an extended power outage the surplus generating capacity of the onsite generators can be shunted to nonemergency loads. Where a bypass breaker has been provided for this purpose, the bypass breaker must be key interlocked to prevent any possibility of normal power being connected in parallel with the local generator when normal power is restored.

K.3.3 Generator Receptacles: NIH Institutes and Centers shall review their research needs for reliability of electrical power. The use of an onsite diesel generator is a requirement for most research activities, including any programs that require animal husbandry. Where a generator is deemed necessary, generator receptacles for connection of a small NIH-owned portable generator might also be required depending on program requirements. The NIH senior electrical engineer should be consulted to determine whether a generator receptacle is required on each specific project.

Generator receptacles shall be located 1 m above finished grade at or near an accessible roadway, parking lot, or loading dock. A receptacle bank shall include the following devices:

- 200 A, 480/277 V, four-pole, five-wire Russell-Stoll junction box, angle adapter, and pin and sleeve receptacle, with either integral or separate series rated over current protective device where receptacles are parallel. The quantity of 200 A receptacles shall match the generator output.
- One Woodhead 15 A, 125 V, two-pole, three-wire NEMA Type 5-15R with a flip-lid cover for 120 V AC load bank control or battery charger.
- One Woodhead 15 A, 125 V, two-pole, two-wire-locking NEMA Type L1-15R with a flip-lid cover for remote start circuit.
- One Woodhead 20 A, 250 V, two-pole, three-wire-grounding NEMA Type 6-20R with a flip-lid cover for 208 V AC heater circuit.

The last three receptacles listed above shall be installed in a Woodhead box, directly adjacent to the boxes containing the Russell-Stoll receptacles, and the wiring may be combined with the larger power conductors.

K.4 Motor Control

Motors shall be operated on the system voltage noted in Table K.4:

Table K.4 Motor Control Rating and Voltage

Motor Rating (V)	System Voltage (V)
115	120
200/208	208
460	480

Motors with ratings other than those listed shall not be connected.

Thermal manual motor starters (TMMSs) shall be of the nonautomatic resetting type and shall be lockable in the off position. Three-phase motor starters shall be sized by the NEMA rating. Motors 37,300 W and larger shall have reduced-voltage starters.

Motor starters shall be combination type with a fused disconnect or a motor circuit protector. Three-phase motor starters shall have integral single-phase protection against loss of any phase voltage. Solid-state overload relays provide this function inherently. Pilot devices to be included in three-phase motor starters are:

- Red running pilot light
- Green-power-available pilot light
- Hand-off-automatic (HOA) switch
- Control power transformer (CPT) with two primary and one secondary fuse, with secondary voltage of 120 V
- Two normally open (NO) and two normally closed (NC) auxiliary contacts with the capability of adding more
- Mechanical override to open the starter enclosure while energized

Motor control centers (MCCs) shall be provided where four or more motors are located in an area. MCCs shall have copper bus and plug-in starters with no hard wiring directly to the starter. All control wiring (in or out) shall be extended to terminal

strips in a central location in the MCC in accordance with NEMA Standard ICS 2-322, Type C wiring. **Motor starters shall conform to IEC 947-4-1 Type 2 component protection in the event of a short-circuit.**

Ladder diagrams and sequences of operations shall be provided for all control functions. This applies to heating, ventilating, and air conditioning (HVAC); automatic temperature controls (ATC) (pneumatic or electric); plumbing; fire protection; security; programmable lighting control; and so on.

Motor starter enclosures shall be NEMA Type 1 indoor, NEMA Type 4 outdoors, and NEMA 4X in corrosive environments. High-efficiency motors shall have the overcurrent protection sized in accordance with the manufacturer's recommendations. See General Design Guidelines, Section: Mechanical, for variable-frequency (speed) drives (VFDs). Power factor correction capacitors shall be applied to motors 7.5 kW and larger. The capacitors shall be wired directly to the motor terminals. See Motor Disconnect Support Detail, Figure K.4, below.

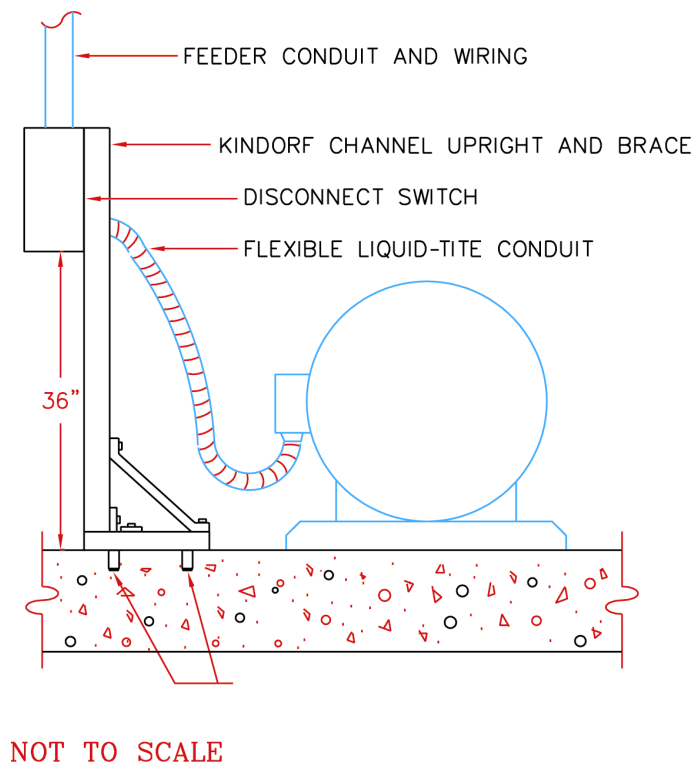

Figure K.4 Motor Disconnect Support Detail

K.5 Lighting

Lighting requirements shall follow the IESNA *Lighting Handbook* except as noted herein. Light levels for specific areas are listed in the Biomedical Research Laboratories and Animal Research Facilities volumes of the NIH Design Policy and Guidelines. General lighting requirements not listed in other volumes or in the General Design Guidelines, Section: Sustainable Design, will be presented here.

A lighting fixture schedule on drawings, identifying the manufacturer, catalog number, lamp type, number of lamps, fixture depth, installation method, description of fixture, and remarks should be provided.

It is highly recommended to list two additional manufacturers, with catalog number, and other information noted above for each fixture as approved equal fixtures.

K.5.1 Lamps: Fluorescent 1,200 mm lamps shall be 32 W T8 (25 mm diameter), 3 500 K color temperature with a CRI of 77, and rated average life of 20 000 hours. Compact fluorescent lamps shall be made with 13 mm diameter tubes, 2 700 K color temperature with a CRI of 82, and rated average life of 10 000 hours. The compact fluorescent lamp wattage should vary according to the application.
Compact fluorescent lamps are recommended in all but the most critical color-rendering applications. In those few specific applications, incandescent lamps may be utilized. The PAR halogen infrared (HIR) lamps are recommended for lumen output of 1 150 and lamp life of 3 000 hours.

Standard incandescent PAR and R lamps shall not be specified since they were discontinued as of October 1995. Halogen versions of the PAR and R lamps shall be submitted for the standard incandescent.

Finished rooms or spaces with 3 000 mm minimum ceilings may utilize metal halide (MH) lamps. Open fixtures shall be utilized only with metal halide lamps rated for same. Metal halide lamps shall have a color temperature of 3 200 K, rated life of 5 000 to 15 000 hours depending on the wattage, and a minimum CRI of 65. **Avoid lighting fixtures with specialty lamps with less than 3 000 hours lamp life.**

K.5.2 Fluorescent Lamp Ballast: Ballast shall be solid-state electronic. Ballast shall be UL listed, Class P thermal rating, and Class A sound rating per UL 935-84 and certified as follows by lighting Electronic Testing Laboratory (ETL) or UL and labeled

by Certified Ballast Manufacturers Association (CBM). Ballast shall be rated for the actual number of lamps served, and the voltage shall match the connecting circuit voltage. Ballast shall have an operating frequency of 20 kHz or greater. Ballast shall contain no polychlorinated biphenyl (PCB). Light regulation shall be ±10 percent with nominal ±10 percent voltage variation. Lamps shall be operated in instant-start mode. Ballast shall be designed to withstand transients described in IEEE Standard 587, Category A. Ballast temperature rise shall not exceed 25 °C over 40 °C ambient. Ballast shall meet Federal Communications Commission (FCC) regulations, Part 18. Ballast shall have a minimum 5 year warranty. **Provide variable lighting control, using continuous dimming (100 to 5 percent) and light level switching (either 100/50 percent or 100/60/30 percent).**

K.5.3 Interior and Exterior Lighting: Contact the NIH senior electrical engineer for all exterior and parking structure light fixture requirements.

The following types of light sources shall be used where noted:

Table K.5.3 Light Source Type

Area	Light Source
Site lighting, roadways and sidewalks	Metal halide (MH)
Architectural lighting	MH
Landscape lighting	MH or HPS
Loading docks	MH
Parking garages	MH

Lighting designers shall be concerned about light pollution or the intrusion of NIH light on bordering neighbors. “House side shields” on fixtures or light fixtures with good “cut-off” optics for glare control shall be utilized near the NIH property line. The placement of lighting poles near the property line shall be avoided; however, security illumination shall be provided.

Site lighting poles shall have a 75 x 25 mm aluminum tag riveted to the pole. The tag shall clearly identify the building, panel, and circuit number where the service is derived.

Street lighting shall utilize a “Gardco CR20-3X-175MH-NP” fixture mounted 8 m above the pavement with a 175 W MH lamp. The mounting arm shall be 1.8 m long. Where poles are placed immediately at the edge of a parking lot or other areas where automobile bumpers may come in contact, the pole shall be mounted on a 1 m-high concrete base for protection. The pole shall be shortened accordingly to maintain the 8 m mounting height.

The street lighting units are generally placed 30 to 35 m apart along the majority of the two-lane roads on the NIH Bethesda campus. This gives a minimum average maintained lighting level of about 50 lux on the roadway. Similarly, the walkway lighting units are spaced about 25 to 30 m apart, which gives a minimum average maintained lighting level of 10 lux. Various specific locations may require reduced spacing if they are high-accident areas or for security reasons. The A/E shall coordinate with the Project Officer for such areas.

All street lighting circuits shall be controlled at the point of origin by a photoelectric cell mounted on the side of the building where the circuit originates. A switch shall be provided to bypass the photocell so that the circuit can be energized during the day for trouble-shooting purposes. Site lighting circuits shall use minimum #6 AWG wire in minimum 38 mm PVC conduit. The maximum circuit breaker size protecting site lighting circuits shall be 30 A. The plastic conduit is placed at least 600 mm below grade, and a 150 mm-wide plastic warning tape is placed above it at 150 mm below grade.

When a new street lighting pole is installed, it is required to have a 3 m-long, 19 mm-diameter, copper-clad ground rod placed in the foundation, and all metallic components shall be grounded to the rod, including metal standard, the ground wire pulled in with the power circuit, and an equipment ground wire to the luminaire.

Outdoor lighting circuits shall not have underground splices or tee splices. If splices are necessary, they shall occur only in accessible locations in light pole bases.

Walkway lighting fixtures shall be typically mounted on 3.5 m poles with 175 W MH lamps. Walkway lighting shall be “Lumec CAND2 175MH.”

Parking garages above grade with open construction shall have the perimeter fixtures controlled by a photocell. The perimeter fixtures shall be of the glare control

type with a flat lens rather than the drop-lens type. Internal fixtures may have the drop lens to achieve good vertical foot-candles.

A lighting fixture schedule shall list at least two manufacturers and model numbers, preferably three.

Recessed fluorescent lighting fixtures shall be supported from the building structure on minimum two diagonal corners independent of the ceiling construction. Steel wire shall be minimum 3.5 mm.

The office average maintained light level using a maintenance factor of 75 percent shall be 500 to 800 lux. See the Biomedical Research Laboratories and Animal Research Facilities volumes for values in other types of spaces.

Circuit connections to lighting fixtures shall be made with minimum 19 mm flexible metal conduit, maximum 1.8 m in length.

Lighting fixture pendants shall be minimum 13 mm diameter stems with swivel mounts.

Industrial fluorescent lighting fixtures shall have a wire guard or plastic sleeves over the lamps. Shelf-mounted, open-strip light fixtures shall also have plastic sleeves over the lamps.

Site lighting circuit voltages of existing circuits may be obtained from the Project Officer and the NIH Electric Shop.

Animal loading docks and food service loading docks shall use HPS lighting. Loading docks shall be provided with 120 V source(s) for bug “zapper” fixtures.

The zonal cavity method shall be used for calculating the design light levels for uniform layouts with standard light fixtures. The point-by-point method shall be used for calculating the design light levels for unique lighting fixture applications or where asymmetrical lighting layout is utilized. All fluorescent lighting fixtures in mechanical areas shall have wire guards or lens covers.

Storage areas and mechanical equipment areas with high ceilings shall use fluorescent or HID lamps depending on the size of the area and height of the ceiling.

Incandescent lighting shall not be used except when approved by the NIH. Where contactors are used, they shall be mechanically held.

Where HID fixtures are used for interior illumination, all fixtures shall be equipped with instant restrike ballast.

Exterior lighting shall be controlled by a digital time clock and photoelectric controls and have a hand-off-auto switch. Wiring for lighting in large outdoor areas shall use multiphase branch circuits, and adjacent fixtures shall be alternately connected to different phases.

The protective circuit breakers shall be single-phase to preclude a total outage of light in any one area. Pole-mounted lighting fixtures and interior pole wiring shall be protected by in-line fuseholders located within the pole base or transformer housing.

K.5.4 Emergency Lighting: Emergency lighting and exit sign fixtures shall be fed from the emergency circuits where available or shall have battery backup power. Battery ballast shall have an integral self-test feature. All emergency battery powered lights shall have a test button and battery condition indicator light. Exit signs shall be LED type.

K.5.5 Light Poles: The maximum height for parking and roadway lighting should be 8 m. Roadway lighting poles shall have breakaway bases; poles for parking lots shall be protected by poured concrete bases.

All light poles shall be grounded and have adjusting leveling nuts. Mounting bolts and adjusting leveling nuts shall have trim cover.

K.6 Power Quality

K.6.1 Grounding: A solid-grounding electrode system shall be provided to ground the service entrance equipment. Where a pad-mounted transformer is utilized, a ground ring of #4/0 AWG bare copper conductors shall be provided around the transformer pad. Ground rods shall be placed approximately 1 m outside each corner of the pad. Two #4/0 AWG conductors shall be brought up into the transformer enclosure for equipment grounding. The transformer neutral shall be grounded only inside the service entrance (SE) equipment in the building. A #4/0

AWG ground conductor shall extend from the outdoor ground ring underground to the main electric room ground bus.

A similar ground ring shall be installed surrounding the main electric room (or indoor transformer vault) with ground rods in each corner and maximum 6 m on center around the perimeter of the room. Ground conductors shall be connected to a wall-mounted ground bus at each end of the bus and at each ground rod between.

The ground bus shall be 50 x 6 mm copper and extend the length of one of the long walls of the transformer vault. The ground bus shall be mounted 300 mm above finished floor. Ground conductors leading to the ground ring shall be exothermically welded to the ground bus; all others shall be bolted. Equipment and grounding electrode conductors (all bolted conductors) shall be labeled. Labeling shall utilize embossed brass metal tags with nylon tie wraps.

Ground conductors brought through the floor or walls shall be in PVC conduit sleeves. Ground conductors shall not be located in traffic areas or where subject to damage. However, where ground leads through the floor are subject to damage due to layout changes, the PVC sleeve shall be cut off flush with the floor. A steel “C” channel shall be placed face down over the penetration to form a protective bridge. The “C” channel shall be bolted to the floor with the ground wire exiting one end. Feeders and branch circuits shall contain equipment ground conductors sized in accordance with the NEC.

Panelboards serving isolated ground receptacles shall have an isolated ground bus in addition to the equipment ground bus. The isolated ground bus shall not be bonded to the panelboard enclosure or equipment ground bus. Isolated ground receptacles are typically required in laboratories and offices. The buses shall be clearly labeled. An isolated ground conductor shall be sized to match the phase conductor. The isolated ground conductor shall be isolated to the separately derived power source.

All structural steel shall be grounded. All exposed metallic structures such as light poles, aerial structures, and manhole/handhole covers shall be bonded to the grounding conductor and grounded to separate grounding electrodes. Fence enclosures around or adjacent to substations shall be grounded to electrodes with flexible braid at 15 m intervals, with bonding jumpers at gates and fence openings to

provide metallic continuity. All grounding test points shall be accessible for verification.

A copper ground bus mounted 600 mm above finished floor and mounted on insulators 40 mm from the wall shall be provided as follows:

- Main electric room: 6 x 50 mm bus installed on one long access wall.
- Electrical closets/rooms: 6 mm x 50 mm x 600 mm bus connected to the main electric room with a #4/0 bare copper ground wire. A #4/0 bare copper ground riser from each closet ground bus vertically routed through stacked electric rooms shall provide grounding connection between the closets.
- Main communication room: 6 mm x 50 mm x 600 mm bus connected to the main electric room ground bus with a #2/0 insulated grounding conductor
- Communication closets/rooms: 6 mm x 50 mm x 600 mm bus connected to the main communication room with a #2/0 bare copper ground wire. A #2/0 bare copper ground riser from each closet ground bus vertically routed through stacked communication rooms shall provide grounding connection between the closets.
- A separate grounding conductor shall be provided for all electrical work. The ground conductor shall be insulated, color-coded green, and sized per NEC requirements.
- A #4/0 ground conductor shall be provided in all medium-voltage ductbanks.
- All underground connections shall be made using exothermic weld connectors and installed utilizing the appropriate tool as recommended by the manufacturer.

K.6.2 Harmonics: The power supplies found in any computerized equipment such as PCs, laser printers, file servers, electronic ballasts, VSDs, and uninterruptible power supplies impose third-order (180 Hz) and higher harmonic currents on the neutral conductor of three-phase, four-wire electrical systems. The triplet (multiples of three) harmonics add in the neutral conductor. The worst-case 100 percent total harmonic distortion would create a neutral current of 1.73 times the phase current.

Where a high concentration of computer loads relative to all other noncomputer loads is anticipated, precautionary measures shall be taken. The following shall be provided where a large percentage (60 percent or more) of the load is or will be computerized:

- Full-size individual neutrals in branch circuits.
- Branch circuit panel boards with 200 percent neutrals.
- Transformers with K rating of K-13 and 200 percent neutral from transformer to panel.
- Adequate cooling in electrical rooms.
- Separate dedicated circuits for printers and PCs.
- In extreme cases where two high harmonic loads are approximately equal, a phase-shifting transformer will shift the current of one load (feeder) relative to the other such that the harmonic currents cancel. This type of transformer is typically used to fix an existing problem and is difficult to apply during design unless specific information is known about the load.

K.6.3 Transients: The NIH has not experienced many problems with transients to date. Therefore, at this time no specific requirement for transient-voltage surge suppression (TVSS) is made. However, if the user has very sensitive electronic equipment without UPS protection, TVSS protection may be prudent. A layered protection plan is recommended. ANSI/IEEE Standard C62.41 Category C3 TVSS protection shall be provided at the SE and Category B3 TVSS protection at the downstream branch circuit panel. When lightning protection is deemed necessary, TVSS at the main service entrance switchgear shall be provided.

K.6.4 Lightning Protection: New buildings at the NIH shall be evaluated for lightning protection based on the guidance provided by the latest NFPA Standard 780, Lightning Protection Code.

Lightning protection will be required where the NFPA 780 study indicates a moderate or higher risk. Lightning protection systems shall meet the most restrictive requirements of the following:

- NFPA 780
- LPI-175
- UL

Low buildings may be protected by the lightning protection installed on an adjacent higher building. The above-listed standards show the zone of protection.

New buildings that need lightning protection shall receive a Master C Label from UL after the new lightning protection system is evaluated by UL and found to be

acceptable. The UL label confirms that the whole structure, including all roof levels and terraces, is protected against lightning strikes.

As existing buildings are altered or modified, especially when the outer envelope is changed, the lightning protection system shall be updated and the protection verified. The vehicle for this is a UL Letter of Finding, rather than a review of the entire building. If a whole building review is required, then a new Master C Label is issued, termed a “Reconditioned Master Label.”

When a lightning protection system is to be installed on a new building, a ground girdle shall be provided encircling the entire building. All metallic objects such as pipes and conduits crossing the ground girdle shall be bonded to the ground girdle.

All electrical service entrance, generator, telecom, and LAN grounding systems shall be grounded to the lightning protection system.

Lightning protection conductors shall be installed in nonmetallic conduit if routed inside buildings. On temporary buildings and minor additions, the A/E shall determine the necessity of lightning protection modifications.

Properly sized surge protectors shall protect all medium-voltage transformers, medium-voltage motors, medium-voltage distribution cables, and telephone and computer equipment.

L. Communications

L.1 Local Area Network, Information Technology, and Communication

The following design policies and guidelines should apply to all systems within the communications and information technologies systems discipline. The purpose is to provide uniformity of design based on the established NIH Design Policy and Guidelines.

L.1.1 Design: The design documents should be presented for review at various stages of completion as determined by the Project Officer. The comments returned from the NIH reviewers should be given careful consideration, as these are based on experiences with past designs that have caused problems for research or maintenance personnel. Written responses to these comments should be provided.

L.1.2 Design Analysis Narrative: A separate design analysis narrative should be prepared to explain the intent and reasoning behind the design. This should be presented in the earlier stages of review to ensure that the design is suitable for NIH personnel.

L.1.3 Reference Design and Safety Guidelines for the Electrical Designer: The NIH is a progressive and dynamic biomedical research institution where state-of-the-art medical research is the standard practice. To support state-of-the-art research and medical care, the facilities must also be state of the art. It is the NIH's intent to build and maintain electrical and communication systems and facilities in accordance with the latest standards.

It has been the NIH experience that the renovation and rehabilitation of existing facilities do not always lend themselves to incorporating the "latest" standards of the industry.

The architect/engineer (A/E) should be alerted to this situation and make an evaluation early in the design stage to determine the implementation feasibility of the latest standards. The A/E should document such findings, provide recommendations, and report them to the Project Officer for a decision on how to proceed.

The A/E design firm should use and comply with, as a minimum, the latest issue of the following design and safety guidelines. In addition, the A/E should use other safety guidelines received from the NIH Project Officer or as required by the program. The reference codes, regulations, and recommended practices include, but are not limited, to the latest version of the following:

- American Hospital Association (AHA), Management and Compliance Series, *Electrical Systems for Health Care Facilities*
- American National Standards Institute (ANSI)
- AHA, Management and Compliance Series, *Fire Warning and Safety Systems*
- American Society of Mechanical Engineers (ASME) A17.1: *Safety Code for Elevators and Escalators*
- Building Officials and Code Administrators, International (BOCA) *The BOCA National Building Code*
- Electronic Industries Association (EIA)
- International Cable Engineers Association (ICEA)
- International Electrotechnical Commission (IEC)
- Institute of Electrical and Electronics Engineers (IEEE), *Color Books*
- Lightning Protection Institute, *LPI 175 Standard of Practice*
- *National Electrical Code (NEC)*, National Fire Protection Association NFPA Standard 70
- National Electrical Manufacturers Association (NEMA) Standards
- *National Electrical Safety Code (NESC)* IEEE C2
- NFPA, *National Fire Codes (NFC)*
- *NIH Center for Information Technology (CIT) Guidelines*
- Institute of Laboratory Animal Resources (ILAR), *Guide for the Care and Use of Laboratory Animals*
- Telecommunications Industries Association (TIA)
- Uniform Federal Accessibility Standards (UFAS)
- Underwriters Laboratories (UL)

L.1.4 Testing and Operational Requirements: The A/E should incorporate the requirements for testing and operational training and for the startup and checkout of building systems in the project specifications.

The A/E should identify all system tests required and the acceptance criteria. The A/E should reference a specific test code or procedure. If none is available, the A/E should prepare a test procedure to verify proper operations of the systems.

L.2 Distribution Duct System (DDS)

The NIH has two underground duct and manhole systems; one is for electrical power cables, and one is for communication circuits. The DDS for electrical power has the manholes designed with the letter “E” followed by a number (one to three digits). Where a duct line branches off an existing manhole, the new manhole will have a subletter designation. For example, the existing manhole is E-29, and two new manholes, E-29A and E-29B, are added onto the same branch. The manhole designations for communications manholes will be discussed in General Design Guidelines, Section: Communications, Local Area Network.

The ducts contain only high-voltage feeders, rated 15 kV for use on the NIH nominal 13.8 kV system, and supervisory cables that monitor and control the high-voltage system. The older supervisory cables, which are in the process of being replaced, were multiconductor control cables. The NIH has continued a process of replacing these cables with smaller diameter data links over fiber-optic paths in the existing campus local area network (LAN) cables and over telephone lines.

The area surrounding manholes in grass areas should be regraded to drain away from the manhole cover. Manhole covers should be 13 mm above finish grade. Manholes should be provided with a sump approximately 300 mm x 300 mm x 150 mm deep. Preferably, manholes should be located in grass areas first, sidewalks second, and the street last. Manholes should not be located in parking spaces. Where ducts are sloped from a high to a low manhole, they should be sealed at the high end only to allow condensation to drain. Cables in manholes should be labeled with embossed brass cable tags and brass chains. Manholes should be provided with two manhole covers, one for forced air and materials entry and the other for worker access. The standard manhole frame and cover should be 700 mm in diameter (600 mm inside diameter). Manhole covers should be labeled “ELECTRIC” for power and “TELEPHONE” for communications. The cover should have a small, flat area for labeling with the manhole number by a welded bead. An embossed brass tag with the manhole number should be permanently mounted inside the chimney and legible from outside the manhole with the cover removed.

L.2.1 Elevation Considerations: The DDS consists of multiple duct runs between manholes of 155 mm inside diameter PVC Schedule 40 ducts with a concrete encasement. The encasement has steel reinforcement in a plane just below the lowest row of ducts where the duct run spans disturbed earth, where it enters manholes and buildings (out to 1.8 m), and where it crosses under heavily traveled roadways. The spacing between ducts is 75 mm in all directions. The ducts should be 760 mm minimum clear below grade or top of roadway.

Duct runs should be sloped from the higher manhole entrance to the lower manhole entrance with no intermediate low spots that would pool moisture. If manhole entrance points are on about the same level, then there must be an arch in the duct run so that there is drainage from a high point into both manholes. If a low point is absolutely unavoidable, another manhole should be provided at or near the low point.

L.2.2 Grounding: Each manhole should be equipped with a 3 m long, 20 mm copper-clad steel ground rod through the floor of the manhole, with all metallic components in the manhole such as racks, cable sheaths, ladder, and so on securely grounded to this rod with a #6 AWG green insulated cable.

L.2.3 Maximum Length Between Manholes: The maximum cable length between manholes should be kept to less than 120 m for an essentially straight run and reduced by 15 m for each bend of 0.79 radians and by 30 m for each bend of 1.6 radians. Bends should be made with the largest radius possible. This by no means releases the engineer or the contractor from doing the necessary cable-pulling calculations to ensure that the maximum tension or sidewall pressures are not exceeded.

L.2.4 Spare Capacity: When new duct runs and manholes are installed, additional ducts should be provided for the future. There should be at least two spare ducts included with the required ducts, more if this will round out a duct bank to a symmetrical configuration. Thus, odd numbers of duct, such as 7, 11, or 13, should not be constructed.

L.2.5 Work Space: All communication equipment should be installed in dedicated communication rooms or closets or, if outdoors, in areas protected against physical and water damage. Pipes and ductwork should not be routed through electrical rooms or closets. Pipes or mechanical ducts should not be routed directly above

communication equipment. At least one duplex receptacle and 25 percent of the lighting fixtures in communication rooms and closets should be connected to emergency power, if available. Each communication room and closet should have at least two receptacles. A finished ceiling is not required. Communication rooms and closets should be located central to the loads served.

Where located within buildings that are air-conditioned, such rooms should be air-conditioned, if practicable. In other locations, the room should be ventilated to maintain the temperature at not less than 8 °C and not more than 33 °C and the humidity level at noncondensing level. Ventilation should be filtered forced air.

Adequate egress should be provided for the installation and removal of equipment without requiring disconnection of any other equipment except that specifically connected to the piece of equipment to be removed and replaced. Where columns are within the rooms, they should not encroach on the required space around equipment.

Communication closets and rooms should be provided in adequate quantity, size, and location to allow for top and bottom conduit and cable entry and exit from the closet or the room. Space should be provided in communication rooms and closets for future conduit, cable, and equipment.

L.3 Testing

Acceptance testing should be performed in accordance with NETA and other applicable codes and standards.

L.4 Conduit

Conduit should be classified by a nominal transition to metric. Conduit should be metallic; PVC or aluminum conduit is not acceptable except as noted below. PVC conduit may be used in underground applications and should be used in concrete duct banks.

Routing of all conduits 25 mm and larger should be clearly shown on the contract drawings. The couplings used on electrical metallic tubing (EMT) should be raintight compression type. Setscrew couplings should not be allowed.

The minimum conduit size should be 21 mm. Surface-mounted conduit in washdown areas should be IMC or rigid galvanized steel (RGS) with threaded couplings. Flexible metal conduit (Greenfield) should be used for lighting fixture connections (whips) and for connections to equipment subject to vibration, noise transmission, or movement. Lighting fixture connections should be made with minimum 1.2 m and maximum 1.8 m lengths of flexible metal conduit in accordance with *NEC*. Liquid-tight, flexible metal conduit should be used for motor connections and undercabinet lighting. Raceway systems should be provided for all wiring.

L.4.1 Conduits (Within Buildings): The minimum size conduit should be 21 mm except as indicated for flexible conduit. All conduit should be installed parallel with the building features, except for conduit run in or under the slab. Conduit should not be installed in the slab on grade. Fittings for metallic conduits should be compression-type steel or malleable iron. Conduit should not be attached to box covers, except for 15 mm or smaller flexible conduit terminated on a flush-mounted box cover. All conduits should be marked every 15 m indicating its use. All conduits should be supported independent of other systems and equipment and should be supported with approved devices (tie wire is not acceptable). Conduit should not be run exposed on top of roof surfaces.

In addition to the requirements of codes, conduit should be installed as specified below.

RGS conduit with threaded fittings should be used in the following locations:

- Elevator shafts, all exterior areas, and other areas where physical damage is probable.
- Where exposed within 2 400 mm of the finished floor level and a point above 2 400 mm past the vertical-to-horizontal transition.
- Biosafety Level 3 and 4 areas.
- Where exposed in animal research and animal holding facilities.
- Where exposed in parking structures.

PVC schedule 40 nonmetallic conduit should be used in the following locations:

- Below concrete floor slab on grade.
- Within concrete walls or within floors above grade.

- Where elbows are terminated above slab, provide RGS elbows.
- PVC conduit stubbed out of floors should transition to RGS raceway prior to the point where the conduit is exposed.
- RGS conduit may be substituted for PVC schedule 40.
- EMT may be used where allowed by code in all other interior spaces. All fittings used with EMT should be compression type.

Aluminum conduit should be used in magnetic field areas (i.e., MRI, NMR areas).

Steel modular surface metal raceway may be used in offices, laboratories, and similar applications where appropriate and classified as a dry location.

Cable tray may be used where dedicated for communications wiring.

See Conduit Support Detail, Figure L.4.1, below.

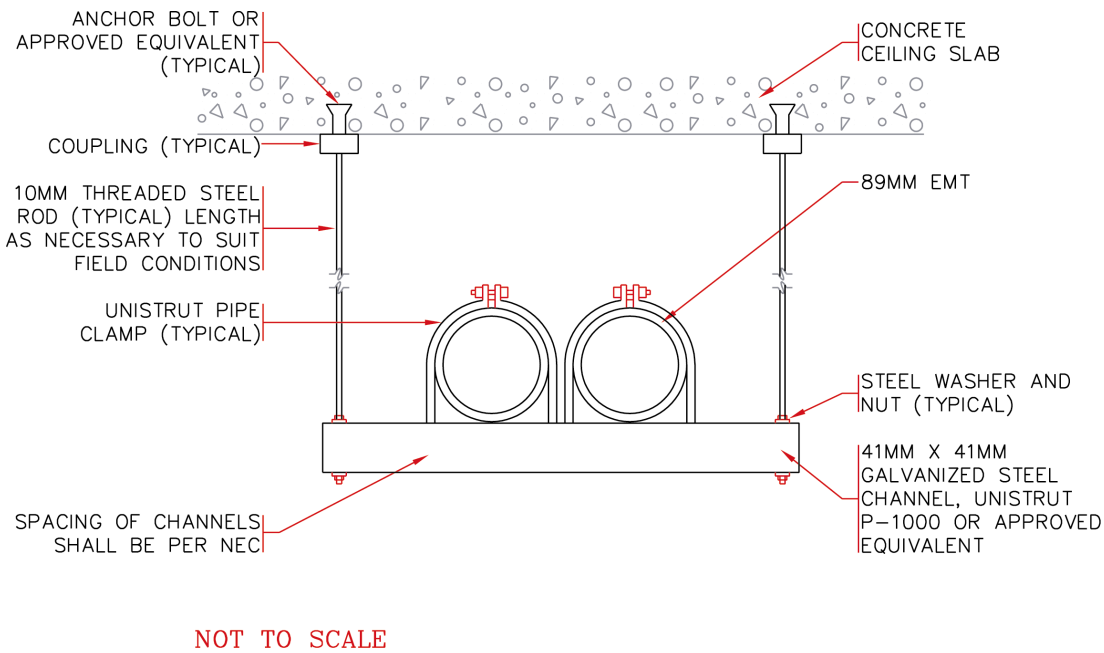

Figure L.4.1 Conduit Support Detail

L.4.2 Raceways (Underground): All underground conduit should be PVC or RGS. Conduits should be concrete encased when buried underneath roadways or when used for medium-voltage applications. Minimum size for conduits used for medium

voltage should be 129 mm. Generally, conduits serving exterior pole-mounted lighting fixtures should be 53 mm in size. Direct-buried conduit is acceptable for electrical systems rated 600 volts and below. Rigid steel may be direct-buried if coated with asphalt paint or PVC coating.

PVC electrical conduit for underground runs should be a minimum of type EB if concrete encased or schedule 40 if direct-buried. Marking tape indicating "Electrical Cable Buried Below" should be installed in accordance with the latest applicable industry standards. All empty ducts should be provided with 4 mm minimum diameter nylon pull wire for pulling future cables.

All empty ducts should be sealed to prevent water seepage into the handhole or manhole. Ducts should be sloped to prevent water drainage into the building.

Prior to pulling cable into any conduit (whether new or existing), the conduit should be cleaned with a wire brush 16 mm larger than the duct and rodded with a mandrel 8 mm smaller than the duct to test the integrity of the duct.

L.4.3 Manholes and Handholes: Manhole and handhole spacing should be as required by code and by wire-pulling requirements but not more than 150 m apart. The minimum inside dimension of manholes should be 3 700 mm x 2 750 mm x 1 980 mm. The diameter of manhole openings should be 910 mm. Handholes should be a minimum of 610 mm x 610 mm x 610 mm.

Handholes should have steel covers. Covers should be grounded. All cables should be racked on nonmetallic cable racks designed for installation on walls of manholes. Handholes and manholes in streets should meet Maryland Department of Transportation standards.

L.4.4 Surface Metal Raceway: Surface metal raceway should be metallic; plastic is not acceptable. The nominal dimensions of the raceway should be as follows:

Table L.4.4 Raceway Dimensions

Single channel	70 mm x 38 mm
Two channel	120 mm x 44 mm
Three channel	120 mm x 90 mm

Emergency circuits should not be wired with normal power in the same raceway. Power and communications should be in separate channels.

L.4.5 Cable Tray: Galvanized steel is the preferred material to be used in ladder cable tray construction for power cables. Ladder or center-spline cable-tray construction is acceptable for communications cable. However, other materials, such as PVC-coated steel and aluminum, will be considered. Cable trays should consist of factory-manufactured units that bolt together in the field. The minimum cable-tray size for communications cable should be 300 mm x 100 mm nominal. Fabrication in the field, other than the shortening of a single straight section, is prohibited. Ventilated tray bottoms, in lieu of ladder rungs, are not acceptable.

Cable-tray locations should be coordinated with adjacent utilities so that the tray will be accessible for adding or removing cables in the future. Routing should also be adjusted so as not to obstruct access to other utility items that would routinely require access for maintenance or adjustment.

The cable trays should be supported directly from the building structure above wherever possible. The spacing of the support points should be as recommended by the cable-tray manufacturer. Provide minimum #6AWG grounding conductor run continuously in cable tray bonded to each section.

Cable trays should not be allowed through fire-rated walls. Provide a minimum of two 103 mm RGS sleeve with insulated bushing extending a minimum of 150 mm on each side of the fire-rated wall.

L.4.6 Demolition: Where the work requires that wiring be removed from conduit that is not embedded in concrete and if that conduit is not scheduled for re-use on the same project, then the conduit is to be removed.

Exception: Where the work requires that the wiring be removed from an embedded-in-concrete conduit and if that conduit is not scheduled to be re-used, the conduit is to be abandoned in place. Conduit that enters the slab from below is to be cut, after the wires are removed, as close to the slab as practical but with not more than 19 mm protruding. Conduit that enters the slab from above should have the floor material removed so that the conduit can be cut with a cold chisel at least 6 mm below the slab elevation, and then the conduit and enlarged opening should be plugged with nonshrinking grout and the slab surface finished flat and true.

L.4.7 Nameplates: All communication equipment should have nameplates identifying the name of the piece of equipment or the name of the equipment served Nameplates should be laminated, phenolic legend plates with white letters on black surround for normal power and white on red surround for emergency power. Nameplates should have minimum 7 mm high letters for small equipment and disconnects, 13 mm high for medium-size wall-mounted equipment, and 50 mm high for freestanding equipment. Nameplates should be attached with stainless steel screws. Where the equipment is remote from its electrical source, under the equipment name in smaller letters the words “FED FROM” followed by the source panel or riser name should be included.

L.5 Local Area Network

The LAN system commonly refers to data transmission on the NIH campus. Any data, whether for research, system monitoring, or other purpose, travel on the LAN system. Any telephone conversations or voice communication travels on a separate system discussed in General Design Guidelines, Section: Communications, Telecom.

The NIH or the user should install fiber-optic and copper cable under a separate contract. The raceway and other details as described below should be designed into the construction documents. The raceway should be installed in accordance with EIA/TIA standards. Each LAN conduit should have three 25 mm inner ducts installed with pull lines for present and future use. The Interbuilding Closet (IBC) should be 9 m^2 and is sometimes referred to as the “Router Room.” The IBC is typically located on the basement or ground floor, away from any electrical rooms.

Four 100 mm conduits should connect the IBC with the first LAN closet(s). Between stacked closets, four 100 mm sleeves should be provided in the floor. The conduits should terminate 150 mm above finished floor and be sealed to prevent flooding of the closet below.

LAN and telephone (voice) closets should have a common wall. The wall should be constructed floor to floor. The 24-hour maintained temperature should be 15 to 25 °C in the IBC and LAN closets. Each closet should have its own thermostat. The relative humidity should be maintained at 30 to 60 percent and be noncondensing. The LAN closet should be 9 m^2 for up to 900 m^2 of area served per floor. The minimum wall dimension should be 2.4 m long. Closets should be located such that the maximum

run of unshielded twisted pair (UTP) Level 5 EIA/TIA copper conductors are 90 m. Horizontal connections between closets are not required. The closets should be centrally located and stacked floor to floor. The four closet walls should be covered floor to 2.4 m above finished floor (AFF) with 19 mm thick, fire-retardant plywood primed and painted flat white.

The LAN closet should be provided with two 20 A individual emergency circuits. Each circuit should supply a quad receptacle (two duplexes). The receptacles should be quarter-pointed on the long wall 460 mm AFF. Two-lamp fluorescent light fixtures controlled by a switch at the door are required per LAN closet.

A dedicated ground riser (DGR) should be installed continuous through stacked closets. A grounding conductor from the separately derived source serving the receptacles in each closet should be connected to the DGR. This grounding conductor should be installed from the transformer secondary or the panelboard ground bus serving the receptacles if the panelboard contains the neutral-to-ground bonding strap. A ground grid in the IBC should be provided. The DGR should be connected to the IBC ground grid. The IBC ground grid should be connected to the electrical service entrance ground grid in the main electrical room. The ground grid in the IBC should be similar to the electrical service entrance ground grid. See General Design Guidelines, Section: Electrical, Power Quality. If a lightning protection system is provided, it should be tied to the IBC ground grid.

Cable tray should be used in all new installations. Cable tray should be installed in all corridors and elsewhere to form a continuous pathway for LAN cables. Cable tray should be UL-listed as a ground conductor and should be electrically continuous and grounded through approved means. The cable tray should be of the ladder or center spline style.

A 21 mm minimum conduit should be installed from the LAN outlet through the corridor wall to the corridor ceiling space for a single workstation. The conduit installer should provide firestopping after the cables are installed. Conduits in firewalls should be metallic and should penetrate 150 mm beyond the face of the wall. Flexible metal conduit should not be used because the inside surface cuts and chafes the data cable. The maximum conduit fill should be 40 percent of the conduit area for installations requiring the servicing of more than one LAN outlet from a conduit. Where there are questions of conduit size or quantity, contact the NIH Division of Network Systems and Telecommunications Branch.

The documents should contain the following required coordination: The general contractor should notify the owner's data wiring subcontractor prior to ceiling installation close-up. The general contractor should schedule telecom/LAN wiring prior to ceiling close-up. The general contractor should allot the required time period to install telecom/LAN wiring. The design documents should state the time period required.

L.6 Telecom

The construction documents should provide telephone raceway in accordance with EIA/TIA standards. Either the NIH or the user should provide telephone cable and station wiring under a separate contract.

The telephone system including fax data should be installed in accordance with the LAN infrastructure described above.

Telecommunications (telephone and LAN) manholes should be numbered similarly to electric manholes as described in General Design Guidelines, Section: Communications, Distribution Duct System, except using the letter “T” in lieu of “E.”

L.7 Supervisory Control and Data Acquisition (SCADA) System

The SCADA system is designed for monitoring and controlling the network protectors and switchgears in the NIH system. The SCADA system is required to monitor network protectors, transformers, vaults, control capabilities for remote operations of network protectors, switchgears, motor control centers, and other devices per contract requirements and alarm capabilities for specific SCADA conditions. The system should be designed for vaults or manhole environments with single or multimode fiber primary communications and fiber-optic or copper conductor secondary communications. The SCADA system should monitor as a minimum the following parameters:

- Each phase voltage of each controlled or monitored device (A, B, C phases)
- Each phase current of each controlled or monitored device (A, B, C phases)
- Total power factor of each controlled or monitored device
- Each network protector and transformer temperature
- Each controlled or monitored device status (open/close)

- Each network protector
- Each vault water level
- Number of protector operations
- Time and data stamp of operation events
- Remote changing of protection setpoints

The SCADA system should have, as a minimum, the following control capabilities:

- Remote opening and lockout of any transformer protector on operator command
- Remote opening and lockout of any combination of transformer protectors on operator command
- Remote closing of any single transformer protector on command
- Remote opening and closing per contract requirements and specifications

The SCADA system should have, as a minimum, the following alarm capabilities:

- Remote alarm for any cut in fiber or copper at any location in the SCADA system
- Remote alarm for loss of power to any data concentrator
- Remote alarm for loss of power to any network protector
- Remote alarm for low-voltage condition

L.7.1 SCADA Design Specifications: The SCADA system should utilize a star fiber-optic design for the primary communication channel from the Central Control Room to the data concentrator located in remote substations or vaults. The system should utilize either a star fiber-optic or daisy-chain twisted pair for the secondary communication channel for the data concentrator to the Intelligent Electronic Device(s) (IEDs). The system should consist of the following:

- The control room should be connected to the data concentrators over a fiber-optic network.
- The data concentrators should communicate over a twisted shielded pair to IEDs mounted in a single or in multiple vaults depending on the number of IEDs to ensure that the status of all relays in the system are updated every 4 seconds and that analog information is updated every 10 seconds. If the twisted pair comes out of a vault, the communication wire should be isolated to a maximum of 6 000 V such that the conductor does not become a path for voltage between vaults.

- The system should be designed to also monitor low-voltage switchgear, motor control centers, panelboards, and other distribution equipment within the NIH complex.
- Monitoring and control devices should be designed to meet 0 to 45 °C temperature and radio frequency interference.
- The system should be designed and implemented by a single vendor, which accepts system responsibility for its operation.

L.8 Paging

Paging systems are rarely needed at the NIH; however, where deemed necessary, they should follow these criteria. Paging (public address) systems should be installed in conduit. Paging speakers should be installed in recessed back boxes. The paging system should operate at 70 V. The wiring to speakers should be #18 AWG two-conductor shielded. Paging-speaker sound levels should consider the ambient noise level. Speakers for ceiling mounting in corridors and other finished spaces should have multitap transformers with 1/4, 1/2, 1, 2, and 4 W taps. Speakers for use in machine rooms and other high-noise rooms should be of the horn type with sound outputs at least 3 dB above ambient.

L.9 Television

Some buildings on campus are wired for cable TV. Conduit should be provided for the installation of the cable by the local cable TV company.

M. Transportation

These guidelines are intended primarily for new construction. However, addition and alteration projects should meet these guidelines to the greatest extent possible.

Transportation systems should be selected on the basis of acceptable response and waiting time intervals. The intervals should be calculated from an analysis of car speed, traffic transfer time, door operation cycle, and other applicable system capacity factors. This section is not intended to cover all aspects of transportation system analysis or design, but rather to act as a standard for use by qualified transportation consultants.

The use of a transportation consultant is recommended to ensure that system selection and design are in compliance with all applicable codes, including but not limited to disability codes, building codes, all technical criteria, and the analysis of transportation needs, locations, and types.

The NIH will provide program factors that are required for computing traffic demand loads.

M.1 Elevators

The location of elevators should be such that they are easily accessible and convenient to circulation routes. When additional elevator banks are provided, every effort should be made to locate them along the same major circulation paths that serve the existing elevators, where feasible. They shall be designed in accordance with all applicable codes. Ample area for circulation and waiting of patients, staff, visitors, and equipment shall be provided. Elevators shall be located to provide positive separation between passenger and service traffic flows and between patient, staff, and animal traffic flows. Service, research laboratory, and inpatient elevators should be separated from public elevators as much as possible.

Elevators should be located so that they will serve all floors that require service. This includes the basement, sub-basement, and mechanical floors as well as all of the occupied floors of the facility. In facilities that utilize interstitial floors and mechanical penthouses, at least one elevator shall stop on these floors to facilitate equipment

maintenance and removal. Elevators shall not be placed over occupied spaces as this will require counterweight safeties and reinforced pits.

Elevators should be grouped in banks of adjacent cars or banks of cars facing each other. Where four or more cars are required within a group, cars should be placed in opposite banks, opening to a common lobby. For service and combined-use cars, two across are preferred, and not more than three in a row should be used. For passenger cars, three across are preferred, and not more than four in a row should be used.

Consideration should be given to the maximum walking distance from the vertical transportation service to the most distant function. This factor should be weighed along with the advantages of locating elevators near the center of the building and the advantage of elevator clustering. In general, the maximum walking distance to passenger and combined-use elevators should not exceed 61 m. A distance of 46 m is preferred. Service elevators should be planned to provide a maximum walking distance of 61 m. A distance of 52 m is preferred. Any decentralized banks and/or clustering of elevators should be planned to include at least two cars to maintain an acceptable dispatch interval between cars and to ensure continuity of service.

Elevators shall be selected and located to permit transportation of 10 percent of the anticipated visitor, staff, and ambulatory patient load within a 5 minute, two-way peak period. The number of elevators required should be selected on the basis of a 35 second response waiting time interval between elevators.

If one elevator would normally meet the requirements in the facility where elevator service is essential (such as facilities over two stories high), two elevators should be installed to ensure continuity of service. If financial limitations restrict the inclusion of a second elevator, as a minimum, a hoistway for a future elevator should be provided.

The possibility of changes in the occupancy type and/or reassignment of building areas that would result in a greater volume of passenger traffic should be investigated. When such possibilities exist, the structural framing shall be designed to permit future installation of additional elevator equipment that will be required to handle the potential increase in traffic volume.

Special conditions that must receive consideration in estimating elevator usage include cafeteria traffic, store traffic, dietary distribution and retrieval, transient traffic, visitor traffic, outpatient traffic, pharmacy, building management, central sterile, surgery, warehousing, grouping of elevators, external transport facilities, building entrances at more than one level, basement facilities, unusual interfloor traffic requirements, trash (if chutes are not used), lab equipment relocation, delivery of gas tanks, and animal rack movement (where elevators are required within or as access to the animal facility).

M.1.1 General Design Considerations

M.1.1.1 Codes: Elevators shall be designed in accordance with the latest edition of all applicable Federal, State, and local codes, including the *Americans with Disabilities Act Accessibility Guidelines*, *Uniform Federal Accessibility Standards*, NFPA "*National Electrical Code*," and ASME/ANSI A17.1, A17.2, A17.3, and A17.5. This includes designing to the appropriate rating/load classification for the intended application.

M.1.1.2 Hospitals: All elevators in hospitals, with the exception of elevators planned exclusively for use in outpatient clinics, shall have hospital-type cars with interior dimensions that accommodate a patient bed with attendants. Cars shall be at least 1.75 m wide by 2.75 m deep. Car doors shall be side-opening with a minimum clear opening size of 1.25 m wide by 2.15 m high. Elevators used exclusively for outpatient clinics may be designed as passenger elevators.

M.1.1.3 Research Laboratory and Animal Facility Buildings: Research laboratory and animal facility buildings will require a combination of passenger and freight elevators. At least one freight elevator should be located and sized to handle the transportation of materials from the loading dock to the final point of use. This includes access to all floor levels and interstitial levels within each building. The freight elevator requires floor containment to prevent contamination of the elevator shaft in the event of a chemical spill. One heavy-duty passenger elevator shall be designed as a freight elevator backup. Both should be readily accessible to the loading dock.

Material handling zones and marshalling areas on each floor should be designed adjacent to dedicated service elevators for the purpose of staging, dispensing, and

disposing of laboratory and animal facility materials. See Biomedical Research Laboratories, Section: Space Descriptions, for additional information.

M.1.1.4 Elevator Speed and Type: Table M.1.1.4 indicates the parameters for the selection of elevator speed and type. Electric traction elevators are preferred for passenger, service, and hospital service applications. Hydraulic-powered elevators may be considered for use where vertical travel is less than 14 m or where overhead clearance is limited.

Table M.1.1.4 Elevator Speed and Type

Elevator Rise		Speed (m/s) (FPM), by Elevator Type		
Stops	***Height, m (ft)***	***Hydraulic***	***Geared***	***Gearless***
2	<4.6 (15)	.635 (125)	not applicable	not applicable
3	4.6 (15) to 13.7 (45)	.635 (125 min)	not applicable	not applicable
4-7	<27.4 (90)	not applicable	1.015 (200) 1.780 (350)	2.54 (500)
7-17	27.4 (90) to 54.9 (180)	not applicable	1.780 (350)	2.54 (500) 3.56 (700)
>17	>54.9 (180)	not applicable	See Note 1.	See Note 1.

Note 1: Consider separate high-rise and low-rise groups of passenger cars.

M.1.1.5 Elevator Lobbies and Groupings: Where four or more cars are required within a group, cars should be placed in opposite banks, opening into a common lobby. Where elevators are accessed from corridors, they should be located on one side of the corridor only and should be set back from the line of circulating corridors. Elevator ingress/egress should be from a distinct elevator lobby and not directly from a corridor. The lobby width between two banks of passenger elevators shall not be less than 3 600 mm or more than 4 200 mm. The lobby width between two banks of service elevators should not be less than 4 200 mm or more than 4 800 mm. Care should be taken to avoid creating dead-end lobbies in excess of life safety code requirements. Elevator lobbies generate noise and should be acoustically isolated from areas sensitive to noise in all buildings and hospital critical care areas. Egress stairs should be located adjacent to elevator lobbies when possible.

M.1.1.6 Elevator Functional Separation: Traffic patterns should be established to separate the various traffic types in an efficient, logical, safe, and secure manner, while maintaining levels of aseptic control consistent with the requirements of the facility. A positive separation of passenger and service elevators shall be provided. Separate "clean" and "soiled" material elevator facilities shall be provided where required.

M.1.1.7 Size and Number of Elevators: The size and number of elevators required for a given facility depend upon various local conditions such as the size, type, and location of the facility's functional areas, the density of the population, the physical location of the elevator groupings, and so on. The elevator installation for a given facility shall be estimated on the basis of anticipated local conditions and quality of service.

The anticipated population density figures will be provided by the NIH and will be used for the purpose of designing the required transportation systems. However, in all cases, the vertical transportation requirements shall be planned for the total population that the facility could reasonably house rather than be based on a forecast of initial occupancy.

M.1.1.8 Maximum Traffic Peak: This is the maximum percentage of the total population on the floors served by the elevators that must be handled during any 5-minute period. This maximum traffic peak will vary with the type of functional areas and special conditions applicable to the facility. The computations for vertical transportation equipment shall be based on transporting 10 to 14 percent of those persons who move between floors during periods of maximum demand in 5 minutes. The peak values, together with the population density factor, should provide a reserve capacity adequate to maintain satisfactory service during periods when one elevator is shut down for repairs.

Where groups of elevators serving identical floors are required to be furnished in two or more locations for the purpose of providing convenience of use, the elevators shall provide a minimum carrying capacity of not less than 120 percent of the maximum traffic peak.

Passenger and service elevators shall have the capability to handle their maximum peak loads while providing a satisfactory interval. Capacity and speed shall be selected that will require the fewest elevators to handle the peak loads with an

acceptable interval. Passenger elevators in a group should have an interval no greater than 45 seconds maximum. Service elevators in a group should have an interval no greater than 60 seconds maximum. For passenger elevators, except special outpatient elevators or other special-purpose elevators, the most suitable car capacity is 1 800 kg. When separate service elevators are provided, they shall have a capacity of 2 300 kg.

M.1.1.9 Hoisting Machines: Geared hoisting machines shall be used for elevators in buildings of 10 stories or less. Gearless machines shall be used for elevators in all buildings of 11 floors or more. The placing of hoisting machines in basement machine rooms adjacent to the hoistway shall be limited to special cases where conditions do not permit the installation of overhead machines.

M.1.1.10 Limited-Rise Elevators: Oil-hydraulic and direct-plunger elevator equipment shall be considered for limited-rise (four stops, approximately 15 m rise) and low-speed elevators. The machine room and pump unit shall be located adjacent to the hoistway at the lowest landing. All hydraulic elevators shall have a Nordic starter for the pump motor. All hydraulic elevators shall be equipped with a scavenger pump to retrieve the waste oil.

The use of generator field or silicone-controlled rectifier (SCR) drive controls is appropriate for unlimited applications.

A single-wrap, geared-traction configuration shall be used for up to 1.8 m/s. A double-wrap or single-wrap, gearless-traction configuration shall be used with speeds of 2.0 m/s and greater. Roping shall be 1:1. Secondary sheaves shall be used with a secondary sheave area. All hydraulic elevators shall be equipped with emergency power outage car return controls.

M.1.1.11 Elevator Operation and Controls: Special control and medical emergency service shall be provided in areas serving surgery, intensive care, emergency, patient care, and dietary usage. Each elevator bank serving these areas shall be provided with key-operated emergency switches for hospital priority service. Provide these switches at each landing. This switch will cause the closest available car to bypass other calls in response to an emergency call. An on-demand microprocessor system shall be provided for all elevator controls. Three or four car banks shall be controlled in group operation.

Controls shall operate properly with a 500 KHZ to 1 300 MHZ radio frequency signal, transmitted at a power level of not less than 100 watts effective radiated power (ERP) at a distance of 1 m. The equipment shall be provided with electromagnetic interference (EMI) shielding within FCC guidelines. Noise level rating at the elevator equipment and its operation shall not exceed 80 dBa in the machine room, measured 1 m above the finished floor and 1 m from the equipment.

M.1.1.12 Elevator Capacity and Platform Design: Passenger elevators shall have 1 800 kg capacity and a platform 2 400 mm wide by 1 900 mm deep. Service and patient elevators shall have up to 1 800 kg capacity and a platform 1 100 mm wide by 2 600 mm deep. Service and patient elevators shall have up to 2 300 kg capacity and a platform 2 000 mm wide by 2 600 mm deep. Platform size is to be evaluated relative to the type of patient travel and equipment requirements.

The maximum size of vehicles or other loads and the maximum weight of portable laboratory, medical, or x-ray equipment should be determined before setting the elevator size and capacities. The maximum area allowed by the ASME/ANSI A17.1 Standard shall be used to develop the inside dimensions of car enclosures.

M.1.1.13 Elevator Cars: Car enclosures shall have no front and rear entrance or corner post, shall be of a single-entrance type, and shall be of manufacturer's standard design unless modifications are dictated because of special project conditions. Cab design shall be detailed on the project drawings. Materials for elevator cabs should be selected to reflect the architectural character of the building. Car enclosures shall conform to ASME/ANSI A17.1.

M.1.1.14 Entrances: Passenger and service elevators shall have single-speed, center-opening doors. Two-speed, side-opening doors may be provided in hospitals with separate material handling systems. Door-closing time must comply with ASME requirements. All elevators shall be equipped with buttons to extend door-opening time, adjustable between 0 to 30 seconds. All elevator car doors shall be provided with infrared screen detectors. The passenger elevator door width shall be 1 200 mm standard. Service elevators shall have a width of 1 200 mm standard; a 1 500 mm width is optional if required by the facility's function.

Tamper-proof screws shall be used for all car and corridor fixture plates.

Stainless steel entranceways shall be provided for service and patient elevators.

Raised lettering and other provisions required to ensure accessibility to the disabled shall be provided.

M.1.1.15 Signals: Hall pushbutton stations will be provided with call register LED lights and shall be Adam's Survivor or Survivor Plus (as required in certain areas) series or approved equal. Hall lanterns with an audible signal shall be installed on all elevators. Hall position indicators shall be designed visible from each side. Hall position indicators shall be Central Elevator Electronics (CEE) designed on Adam Control Board for compatibility with Swift Futura Controllers. Car position indicators shall be installed in each car with floor designations, a floor directory signal, and direction arrows. Car operating panels shall use car register floor rectangular buttons and shall be engraved with building and elevator number. Car operating panels shall be Adam's Survivor or Survivor Plus (as required in certain areas) series. A lobby control panel will be provided on elevator banks with two or more cars. Signal fixtures and gongs shall conform to the requirements of ASME/ANSI A17.1 for use by disabled persons.

M.1.1.16 Seismic Design: Seismic protection shall be provided where required.

M.1.1.17 Emergency Power Supply: An emergency power supply shall be provided per ASME/ANSI A17.1 and tailored to the needs of the building.

The equipment specified depends on the service demand and the equipment commercially available to meet that demand. Care should be exercised to avoid specifying noncompetitive methods in features of elevator dispatching and control operation.

M.1.1.18 Door Operation: Power door operation shall be provided for all elevators. The door opening shall be capable of opening doors at the rate of 0.9 m/s. This is a capability speed, with actual speed being adjusted to meet the requirements of the specific installation. The closing speed shall be set per ASME/ANSI A17.1. All power-operated doors shall be equipped with an automatic reopen device for passenger protection.

M.1.1.19 Elevator Car Enclosure: Car lighting will be either indirect or of the luminous ceiling type. Mechanical exhaust will be provided for elevator cars.

M.1.1.20 Hoist Machine: Geared and gearless hoisting machines should be located directly above the hoistway in a machine room where practical by design. For speeds up to 0.5 m/s, alternating current, a two-speed control system with a low-speed range from 0.15 to 0.2 m/s should be provided. For car speeds of 0.8 m/s and greater, a generator field control system shall be provided. The hoisting machine and its control system shall be capable of stopping the car floor level within plus or minus 5 mm of hoistway doorsills. It shall also be capable of correcting for car overtravel, undertravel, and rope stretch. Car stopping shall be automatic and independent of operating devices.

Hoistways shall be illuminated per ASME/ANSI A17.1.

M.1.1.21 Elevator Machine Rooms: Elevator machine rooms shall be large enough to install the elevator equipment, including space for controllers, safe clearances, equipment maintenance, and ventilation. They shall provide sight lines for technicians and shall meet code requirements. Clearances for control equipment shall be no less than required by the *National Electrical Code* and shall provide enough working space between the various items of equipment for maintenance purposes. It must be possible to remove the major equipment components of each elevator for repair without dismantling the components of an adjacent elevator. Minimum headroom shall be 2 300 mm.

Air conditioning will be provided in elevator machine rooms to maintain ambient temperatures above 15 °C and below 32 °C. Provide a minimum of 47 L/s exhaust. Filters shall be provided to remove dust.

All elevator machine rooms shall be electronically and acoustically isolated to prevent interference from building electronic equipment and objectionable noises. Elevator machine rooms shall be acoustically separated from all critical care areas and occupied rooms.

Elevator machine room access shall conform to ASME/ANSI A17.1.

Stairs should be provided for convenient access to machine rooms. Access to machine rooms should preferably not require passage across a roof or similar exposed area.

Geared and gearless machines and motor generator sets shall be mounted on vibration- and sound-isolating devices. These isolating devices, when required, shall conform with seismic design requirements. Trapdoors and hoisting beams shall be installed in all machine rooms to facilitate maintenance and removal of equipment for repairs.

Adequate lighting shall be provided to ensure proper illumination in the front and rear of all controllers, on supervisory and selector panels, and over each hoisting machine. Convenience outlets shall be provided for each elevator area within the machine room.

Access doors to secondary levels shall be "B" label and a minimum of 760 mm wide by 1 100 mm high. Each door shall be of the self-closing, self-locking type and shall have a cylinder lock that requires a key for entry only. Stairway and ladders to access doors shall be installed in compliance with ASME/ANSI A17.1.

M.1.1.22 Dedicated Elevators: Dedicated elevators may be considered for transportation of patients, staff, or material between two distinct points when the service is required to satisfy critical functional relationships that may not be satisfied by locating departments adjacent to each other. An example of such a critical relationship is the location of the surgical suite in relation to the intensive care unit. The controls of dedicated elevators shall prevent the frequent use of the elevators for other purposes.

M.2 Elevator Fire Protection

See General Design Guidelines, Section: Fire Protection, for all elevator fire protection requirements.

M.3 Dumbwaiters

M.3.1 Codes: Dumbwaiters shall be designed in accordance with the latest edition of all applicable Federal, State, and local codes, including ASME/ANSI A17.1; electrical equipment and wiring with NFPA Standard 70, *National Electrical Code*; and hoistway doors with NFPA Standard 252, Fire Test of Door Assemblies. Dumbwaiters shall not be located over occupied spaces as this will require counterweight safeties and reinforced pits.

M.3.2 Capacity and Speed: The dumbwaiter capacity shall not exceed 225 kg, and its area shall not exceed 0.8 m^2. Speeds of dumbwaiters serving three to four floors shall be 0.5 m/s; up to six floors, 0.8 m/s; and seven or more floors, 1.5 m/s.

M.3.3 Operation: The dumbwaiter shall be operated by means of dispatch and return program controls at the central station. Automation operations shall include cart loading and unloading transfer features, car and hoistway doors, car-to-floor leveling, and car return to central station.

M.3.4 Signals: A combination position indicator and hall lantern with gong shall be located above the entrance unit at the central station. A bank of buttons for dispatching the dumbwaiter to other floors shall be provided at the front opening of the central station. Each central station dispatching button fixture shall have an "In Use" and "Malfunction" signal light and a reset button for the automatic transfer equipment. Hoistway openings at floors other than the central station shall have call buttons with hall-registration lights, cart-return lights, and remote-hall arrival lights with gongs located over entrance units.

M.3.5 Intercommunication System: A dedicated automatic intercom system shall be provided, including a master station at each floor served by the dumbwaiter.

M.3.6 Cars: The dumbwaiter car enclosure shall be stainless steel, 760 mm wide, 1 100 mm deep, and 1 500 mm high. Stainless steel, vertical-sliding bi-parting car doors shall be provided at each car entrance.

M.3.7 Isolation of Material Handling and Transportation Systems: Chutes, pneumatic tubes, and vertical conveyors shall not be located adjacent to any acoustically sensitive space and shall be resiliently isolated from the building structure at each floor penetration by means of rubber-in-shear or glass-fiber isolators providing a minimum static deflection of 10 mm. The exterior of each trash chute and large pneumatic tube shall be coated with a viscoelastic, vibration-damping compound or other damping material.

Wherever possible, other vertical and horizontal system runs, such as pneumatic tubes, conveyors, and monorails, shall not be located adjacent to, over, or under any acoustically sensitive space. They shall be isolated from the building structure by resilient hangers, isolated support traps, resilient pads, or trapeze hangers and shall have no direct physical connection with the finished ceiling system of the space

below. If the horizontal runs are routed over acoustically sensitive spaces such as private offices or examination and treatment rooms, the pneumatic tubes shall be coated with viscoelastic damping compound or other damping material, such as a 25 mm thick glass-fiber blanket, with an impervious outer covering such as metal foil. Other pipe-sleeving material is available. These materials can be shop-applied for the majority of the system run, with field application required only at the joints. If horizontal tube runs are routed over acoustically critical spaces, such as recovery, surgery, cardiology exam, or Intensive Care Unit (ICU), a suspended-ceiling system providing a sound isolation rating in the range of NIC 40 shall be required in addition to the resilient isolation of the service runs. Alternatively, these system runs can be boxed, encased, or wrapped with an impervious barrier material such as dense plaster, gypsum board, or a 50 mm thick glass-fiber material (96 kg/m^3 density) or covered with an impervious outer wrapping such as reinforced leaded vinyl or sheet lead.

In addition to resiliently isolating the service from the building structure, the drive units, transfer or diverter units, and exhauster associated with each type of system runs, motors, pumps, compressors, and gear and drive assemblies shall also be isolated.

M.4 Elevator Controls

M.4.1 Controller: All new elevator installations and upgrades to existing elevators shall be equipped with a solid-state microprocessor-based controller. These controllers are available to all elevator manufacturers and do not constitute a sole source. The ORF has a program of updating all of the older elevators throughout the campus and will use controllers manufactured by either Computerized Elevator Controls (CEC model “Swift Futura” or later version) or Motion Control Engineering (MCE model “Performa Controller” or later version). MCE hydraulic controllers are recommended for hydraulic elevator applications.

M.4.2 DC-SCR Drives: All new elevator installations and upgrades to existing elevators using CEC equipment shall be equipped with a DC silicone-controlled rectifier (SCR) drive in lieu of motor-generator sets. Either the Magnetek model “DSD412” or the Lewis-Allis model “Sabor” SCR drive for elevator hoist motors is acceptable. Both of these drives are available on the open market and do not constitute a sole source procurement. MCE Intelligent Motion Controls (IMC) require

a new “System 12” SCR drive and are acceptable. All above-mentioned drives or latest version of any are acceptable for installation.

M.4.3 Fixtures: All new elevator fixtures shall be Adam’s Survivor (or Survivor Plus as required in certain areas) Series panels engraved with building number and elevator number and include light-emitting diode (LED) illumination. The hall stations shall be engraved with the fire station information and shall be Adam’s Survivor (or Survivor Plus Series as required in certain areas) series or approved equal.

Car operating panels shall be Adam’s Survivor or Survivor Plus Series, equipped with emergency lighting, digital position indicator, built-in autodialer telephone with call-tracking capability, and fire fighter return service controls and signals. An integral floor announcer shall be provided to announce floor stops, car direction, nudging, firefighter’s return service, and code blue (in hospital). Floor buttons shall be rectangular in shape with numerals and LED illumination. Car station shall be provided with a 120 V GFC1 receptacle and include the following key switch arrangements:

- Inspection Key Switch Duo # 7320
- Car Lighting Key Switch Duo # 7336
- Fan Key Switch Duo # 7336
- Independent Service Key Switch Duo # 7336
- Hall access Key Switch Duo # 7320

M.4.4 Safety Curtains: Safety curtains shall be waterproof GateKeeper series 2000 infrared units or latest version by Adams.

M.4.5 Door Operators: All new elevators shall be equipped with G.A.L. Manufacturing Corporation door operators for standard and bi-parting freight doors. Freight elevators with horizontal doors shall be equipped with Peele Door Company door operators.

N. Environmental

N.1 Environmental Management References

The latest edition of all references (i.e., regulations, executive orders, standards, manual issuances, and guidelines) shall be used. The following list is not inclusive. The Project Officer and architect/engineer (A/E) are responsible for complying with all current applicable environmental regulations.

N.1.1 Federal Regulations:

Resource Conservation and Recovery Act

- 40 CFR Parts 260 through 268: Definition, identification, transportation, treatment, storage, and disposal of solid and hazardous wastes
- 40 CFR Parts 280 through 282: Underground storage tanks

Clean Water Act

- 40 CFR Part 112: Spill prevention control and countermeasure plan
- 40 CFR Part 122: Permit requirements
- 40 CFR Part 125: NPDES criteria and standards
- 40 CFR Part 131: Water quality standards

Toxic Substances Control Act

- 40 CFR Part 761: PCB use

Clean Air Act

- 40 CFR Part 61: National Emission Standards for Hazardous Air Pollutants

Hazardous Materials Transportation Act

- 49 CFR Parts 171 through 180: Rules, transportation, and packaging of hazardous materials

Worker Safety Requirements

- 29 CFR Part 1910.120: Hazardous waste operations and emergency response

Safe Drinking Water Act

- 40 CFR Parts 141 through 143: Drinking water standards and National Secondary Drinking Water Regulations

National Environmental Policy Act (NEPA)

- 40 CFR Parts 1500 through 1508: Implementation procedures

N.1.2 State of Maryland Regulations:

- Maryland Solid Waste Regulations COMAR 26.04.07
- Maryland Hazardous Waste Regulations COMAR 26.13
- Maryland Hazardous Waste Facilities Siting Regulations COMAR 14.14
- Maryland Underground Storage Tank Regulations COMAR 26.10.02
- Maryland Water Pollution Control Regulations COMAR 26.08
- Maryland Stormwater Management Regulations COMAR 26.09.02
- Maryland Drinking Water Regulations COMAR 26.04.01
- Maryland Oil Pollution Control Regulations COMAR 26.10.01
- Maryland Pretreatment Regulations COMAR 26.08.08
- Maryland Air Pollution Control Regulations COMAR 26.11

N.1.3 Industry Standards:

- American Petroleum Institute, various standards regarding design, installation, and maintenance of above-ground storage tanks
- Washington Suburban Sanitary Commission (WSSC), Industrial Users Compliance Requirements

N.2 Environmental Management

This section describes the general requirements and specific goals for managing environmental issues on the NIH campus. Issues addressed in this section include:

- Hazardous materials storage and handling
- Hazardous waste storage and handling
- Bulk storage facilities
- Wastewater discharges
- Solid waste management and recycling

Attention to environmental management issues and proper waste handling is a key portion of the NIH's overall goals of ensuring the health and well-being of NIH employees, visitors, and neighbors and maintaining the NIH campus atmosphere.

N.2.1 Background: These guidelines regarding environmental management on the NIH campus encompass the current Federal and State of Maryland regulations regarding environmental management issues. They also include the requirements of local governments and agencies such as the WSSC and Montgomery County, Maryland. Federal laws applicable to environmental management on the NIH campus include:

- Resource Conservation and Recovery Act
- Clean Water Act
- Toxic Substances Control Act
- Clean Air Act
- Hazardous Materials Transportation Act
- Worker Safety Requirements
- Safe Drinking Water Act
- National Environmental Policy Act

Certain environmental issues have been purposely excluded from this section of the Guidelines because they are fully addressed in General Design Guidelines, Section: Site/Civil. These issues include stormwater management and sediment control, erosion control, wetlands and use of fertilizers, and pesticides in landscaping and grounds-keeping. It is the goal of the NIH to fully comply with all Federal and State requirements in these areas.

All projects that result in any ground disturbance shall prepare a sediment and erosion control drawing in compliance with the requirements in General Design Guidelines, Section: Site/Civil.

N.2.1.1 National Environmental Policy Act (NEPA). NEPA applies to all projects regardless of size. This is a joint process between the Project Officer, the Division of Environmental Protection and the Division of Facilities Planning to determine the appropriate action. Based on a preliminary project description (scope), it may be possible to determine that no further action is necessary. Possible further actions include categorical exclusion, development of an Environmental Assessment, or an Environmental Impact Statement. A flowchart of the NEPA process has been prepared and is maintained by the Division of Environmental Protection.

N.2.2 General: All NIH facilities shall be designed to minimize the use of hazardous substances. Alternative nonhazardous or nontoxic materials are preferred in all new construction and renovations. The A/E should develop a plan for eliminating the use of hazardous substances. Where hazardous substance use is unavoidable, the A/E shall demonstrate that alternate nonhazardous substances are either not available, inferior to the hazardous substance, or cost prohibitive. Examples of hazardous substances that should be avoided include, but are not limited to, oil- based paints and caulks; hazardous cleaning, surface preparation, and paint-stripping solvents; and petroleum-based contact adhesives.

In general, most new construction will result in the release (off-gassing) of odors that can affect occupant comfort. If hazardous substances are avoided in the construction, these odors will generally be nonhazardous; however, they can still have a detrimental effect on indoor air quality. Examples of nonhazardous substances that can affect indoor air quality include systems furniture, carpets, and latex paints.

New facilities should be allowed to off-gas prior to occupancy. Ventilation systems on new construction shall be operated for at least 1 month before the building is occupied. For renovations, where it is not feasible to isolate NIH employees from the off-gassing, materials that will off-gas and affect indoor air quality should be allowed to air out and off-gas in a warehouse or well-ventilated, unoccupied area before they are installed.

Insecticidal dusts, such as boric acid, shall not be applied in wall cavities and voids and/or chase areas as part of the facility construction or renovation.

N.2.3 Hazardous Substances Receiving, Storage, and Staging Areas and General Handling:

N.2.3.1 Receiving Areas: Hazardous substances used at the NIH fall into two categories. They are either substances used in the facility directly by the research activity or substances used in support of the facility. An example of the hazardous substances used directly by the research activity would be laboratory chemicals used to perform analyses. An example of the hazardous substances used in support of the research facility would be chemicals used for washing glassware, cagewashing, or neutralizing wastewater discharges.

Hazardous substances that will be used in a laboratory are delivered directly to the end-user laboratory from the loading dock. Staging and temporary storage areas will therefore not be required in the receiving area for these materials.

Materials that will be used in support of a facility must be placed in a hazardous-substance storage area. In general, these materials are received in 220 L drums or larger. Storage capability shall exist for up to 10 drums. Some neutralization chemicals may be stored in bulk containers up to 1 600 L.

Each building utilizing these hazardous substances shall be designed with a receiving and storage area. This area shall be located at or near the point of use of the materials and will be used for long-term storage of hazardous materials.

N.2.3.2 Storage and Staging Areas: Hazardous-substance storage areas shall be out of the normal flow of personnel traffic. There should be convenient access from the storage area to the freight elevator and/or the loading dock without having to use heavily traveled corridors.

The storage and staging area shall be large enough to store the hazardous substances and provide room for loading and unloading the drums or containers. If multiple substances will be stored, the design shall allow incompatible materials to remain segregated while in storage.

The storage area shall be designed to contain any spills of hazardous substances that may occur as a result of handling. Spill containment may be accomplished with a curb around the area, secondary containment bins, shelving designed to contain spills, or a combination thereof. Any curb used for containment spills shall be designed to allow convenient ingress/egress using a drum trolley.

A chemical-resistant coating shall be applied to the walls and floor in this area to facilitate the cleanup of spills. These areas shall be thoroughly caulked and sealed to minimize pest harborage and exclude pests.

Safety equipment shall be provided for each storage and staging area. The safety equipment shall consist of an emergency eyewash and an emergency shower. Special consideration must be given to this area in the fire protection design if flammable materials will be stored.

N.2.4 Hazardous Waste Storage and Handling at On-Campus Buildings: Laboratory and animal facility buildings on the NIH campus shall be designed with a room for temporary storage of hazardous waste and radioactive wastes. Mixed waste (hazardous waste that is also radioactive) shall be treated as radioactive waste in this temporary storage area. Hazardous waste is generally stored in this room for several hours, although it may be stored overnight.

The design of the radioactive waste room is discussed in Biomedical Research Laboratories, Section: Design Criteria.

N.2.4.1 Location: The storage room shall be located near the loading dock for easy access to the trucks that will be used to transport the waste to Building 21 for processing. Personnel shall be prohibited from processing any of the hazardous wastes, such as bulking or lab packing, in this storage room.

There shall be convenient access from the storage room to the freight elevator without having to traverse heavily used corridors. This will allow the contractor collecting the waste to bring the waste down from the laboratories to the storage room while minimizing the risks to the building occupants.

N.2.4.2 Layout and Size: The room shall consist of two individual sections: one for hazardous waste and one for radioactive waste. The storage room shall be large enough to provide for temporary storage of the hazardous waste and radioactive

waste and for storage of specialized carts to transport the hazardous waste from the laboratories. The hazardous waste storage section shall be at least 2.5 by 3.5 m. The radioactive waste storage segment shall be at least 0.75 by 1.5 m. Facilities that generate larger amounts of hazardous or radioactive waste will need larger spaces.

N.2.4.3 Storage Cabinets: There shall be at least three, 2 m-high storage cabinets in each room to provide segregated storage of incompatible materials. There shall be sufficient open floor space in the storage room to accommodate one 1 m-long waste cart while allowing a person to access the storage cabinets and shelving.

N.2.4.4 Spill Containment: The storage room shall be designed to contain any spills of hazardous waste that may occur as a result of handling or mishandling the waste materials. The waste materials will normally be transported using specialized carts that will provide spill containment. The A/E may propose alternative means for spill containment within the storage room. Options may include a spill-containment curb around the room and shelving or bins designed to contain spilled materials. Any curb used for containment spills shall be designed to allow convenient ingress/egress using a drum trolley.

N.2.4.5 Floors and Walls: A chemical-resistant coating shall be applied to the walls and floor in this area to facilitate cleanup of spills.

N.2.4.6 Ventilation System: A separate ventilation system shall be installed for the storage room. Exhaust shall be directed away from the building and surrounding buildings' air intake. This ventilation system shall be connected to the building's emergency power system.

N.2.4.7 Lighting: Standard illumination requirements exist for this room.

N.2.4.8 Fire Protection: The room shall be designed to fire protection Hazard Group 2.

N.2.4.9 Safety Equipment: Safety equipment shall be provided for each storage room. The safety equipment shall consist of an emergency eyewash and an emergency shower. A telephone to be used to contact emergency response personnel shall be located either in the room or within 10 m of the room.

N.2.4.10 Design Review and Approval: The NIH Division of Safety shall review all designs for hazardous waste storage rooms and will provide the final approval of the design. The Project Officer shall coordinate this review and approval.

N.2.5 Hazardous Substances Storage and Handling Within Laboratories on the NIH Campus:

N.2.5.1 Laboratory Modules: All laboratory modules shall be designed for the safe storage of hazardous substances while discouraging the storage of excessive amounts of hazardous substances. The designer should consider the function of the laboratory and the potential use of hazardous substances to fulfill this function.
All laboratories shall contain an approved flammable materials storage cabinet. The size of this cabinet shall be based on the volume of flammable materials used in the laboratory. The location of the storage cabinet shall be standardized in the laboratories to assist emergency response personnel. It is recommended that this storage area be located near the laboratory door for convenient access by the technician collecting the hazardous waste. For laboratory modules with a service corridor, it is recommended that this storage area be located near the service entrance rather than the hall entrance. This will avoid the need for moving hazardous waste through the main corridors of the laboratory building. Flammable materials substance storage cabinets should be placed to allow the cabinet to be ventilated, if needed. Ideally, this would place the cabinets near the fume hood.

An additional storage area for nonflammable hazardous substances shall also be provided. This storage area shall have at least two physically separated sections to allow segregation of incompatible materials. Each section of the storage area shall be designed to contain a spill of at least 1 gallon of liquid. The configuration of the storage area shall be designed to facilitate spill cleanup. Interior surfaces of the storage area shall be cleanable, corrosion resistant, and nonreactive.

N.2.6 Hazardous Waste Storage and Handling at Off-Campus Buildings*:* Laboratory buildings located in Montgomery County, Maryland, but not located on the NIH campus shall be designed with two rooms for storing hazardous waste and radioactive waste. Mixed waste (hazardous waste that is also radioactive) shall be treated as radioactive waste. Hazardous waste may be stored in these rooms for up to 90 days, although 60 days is more typical.

N.2.6.1 Location: The storage room shall be located near the loading dock for easy access to the trucks that will be used to transport the waste to the NIH campus for additional processing. Since this waste will be transported over public roads, the room shall be used to prepare the hazardous waste for shipment. Processing conducted in this room includes bulking waste into larger containers, lab packing individual waste containers, and labeling and manifesting the containers for shipment.

There shall be convenient access from the storage room to the freight elevator without having to traverse heavily used corridors. Given the fact that these laboratories are typically leased space, it may be difficult to meet these criteria. If this is the case, consideration shall be given to alternate uses of this leased space that will not generate hazardous wastes.

N.2.6.2 Layout and Size: The storage room shall be divided into two parts. The first part shall be large enough to provide for temporary storage of the hazardous waste as it is received from the laboratories and after it has been packed for shipment. The second part shall be used for bulking and packaging the waste. Space must also be provided for preparing manifests and other documentation. This may be provided in the storage area or in an additional space outside the room. Sufficient space must also be provided for storing specialized carts used to transport the hazardous waste from the laboratories.

N.2.6.3 Spill Containment: Both parts of the storage room shall be designed to contain any spills of hazardous waste that may occur as a result of handling or mishandling the waste materials. Spill containment in the bulking and packaging area may be accomplished with a curb around the area, secondary containment bins, or a combination thereof. Spill containment in the storage area may be accomplished with a curb around the area, secondary containment bins, shelving designed to contain spills, or a combination thereof. Any curb used for containment spills shall be designed to allow convenient ingress/egress using a drum trolley.

N.2.6.4 Floors and Walls: A chemical-resistant coating shall be applied to the walls and floor in this area to facilitate cleanup of spills. These areas shall be thoroughly caulked and sealed to minimize pest harborage and exclude pests.

N.2.6.5 Ventilation System: A separate ventilation system shall be installed for the storage room. Exhaust shall be directed away from the building and surrounding

buildings' air intakes. This ventilation system shall be connected to the building's emergency power system. The ventilation system shall be sparkproof. The ventilation system shall be designed to allow easy access for routine or emergency maintenance from outside the containment area.

N.2.6.6 Safety Equipment: Safety equipment shall be provided for each storage room. This safety equipment shall consist of an emergency eyewash and an emergency shower. A telephone to be used to contact emergency response personnel shall be located either in the room or within 10 m of the room.

N.2.6.7 Fume Hood: A walk-in fume hood is necessary in the bulking and packaging area, where exposure to harmful fumes is possible.

N.2.6.8 Explosion-Proof Design: An explosion panel designed to dissipate the impact of an explosion is required in the storage room.

N.2.6.9 Lighting: Explosion-proof lighting shall be provided in both areas.

N.2.6.10 Fire Rating: Walls of the storage room shall have a 2 hour fire rating.

N.2.6.11 Design Review and Approval: The NIH Division of Safety shall review all designs for hazardous waste storage rooms and will provide final approval of the design. The Project Officer shall coordinate this review and approval.

N.2.7 Hazardous Substances Storage and Handling Within Laboratories Not on the NIH Campus:

N.2.7.1 Modules: All laboratory modules shall be designed for the safe storage of hazardous waste generated by laboratory activities. The volume of hazardous waste generated by a laboratory is a function of the type of work being performed in the laboratory. The A/E should consider the function of the laboratory to determine the space necessary for hazardous waste storage. At a minimum, a 0.75 by 0.75 m area will be required.

The A/E must also recognize that some types of hazardous waste may be incompatible and shall design the hazardous waste storage area to accommodate multiple containers. The A/E should investigate the possibility of stacked containers that will provide sufficient storage space while minimizing the footprint in the laboratory. Each storage container shall be designed to provide secondary

containment of hazardous wastes.

The location of the hazardous waste storage area in the laboratories shall be standardized to assist emergency response personnel. It is recommended that this storage area be located near the laboratory door for convenient access by the technician collecting the hazardous waste. For laboratory modules with a service corridor, it is recommended that this storage area be located near the service entrance rather than the hall entrance. This will avoid the need for moving hazardous waste through the main corridors of the laboratory building.

The hazardous waste storage area shall have at least two distinct segments to allow segregation of incompatible materials. Some laboratories may require three segments depending on the types of hazardous waste that will be generated. Each segment of the storage area shall be designed to contain a spill of at least 4 L of hazardous waste. The configuration of the storage area shall be designed to facilitate spill cleanup. Interior surfaces of the storage area shall be cleanable, corrosion resistant, and nonreactive.

N.2.8 Bulk Storage Facilities:

N.2.8.1 Above-Ground Storage Tanks: Wherever possible, the A/E should consider the use of clean-burning fuels such as natural gas or liquid propane. If storage of these fuels is required (for example, a day tank to ensure uninterrupted availability of fuel), it shall be in above-ground storage tanks installed in accordance with State of Maryland and Montgomery County, Maryland, requirements.

All above-ground storage tanks shall be double walled, be provided with secondary spill containment, and meet the requirements of the American Petroleum Institute and the National Fire Protection Association (NFPA). The tanks shall also be consistent with the NIH Spill Prevention, Control, and Countermeasures plan.

Design considerations regarding above-ground storage tanks include the location of the tanks to provide access for delivery trucks. At the same time, the tanks shall be sufficiently isolated and protected from traffic flow to minimize the risk of accident. The tanks shall also be placed in a location to minimize the aesthetic impact of the tank on the surroundings. This would include the use of berms and landscaping to block the view of the tanks.

N.2.8.2 Spill Control: All bulk storage facilities and above-ground storage tanks shall be equipped with secondary containment to prevent discharge of the material in the event of a spill or a leak. For single storage tanks, the secondary containment shall be large enough to contain the volume of the tank and rainfall from a 10 year, 24 hour storm. For multiple storage tanks, the secondary containment shall be large enough to contain the volume of the largest tank and rainfall from a 10 year, 24 hour storm.

Materials used to provide the secondary containment shall be impervious to the substance contained in the storage tank. The containments shall be equipped with a normally closed valve to prevent accidental discharge of the substance from the containment. This valve can be manually opened to discharge accumulated rainwater after it has been determined that the water is not contaminated.

Other potential spill areas for hazardous substances on the campus are loading docks. Spills can occur at the loading docks during the loading and unloading of hazardous substances or hazardous wastes.

Loading docks shall be designed to contain spills of hazardous substances and minimize the contamination of stormwater runoff. One option to accomplish this objective consists of a loading dock with a grate drain at the base that would accumulate any spilled substances. This drain would be equipped with a normally closed valve to prevent accidental discharge of spilled substances. Uncontaminated runoff would be diverted from this drain by a second grate drain and a small berm. An overhang would divert direct rainfall from the base of the loading dock to the uncontaminated runoff drain. The designer may propose alternative designs that meet this objective.

Control of stormwater runoff and water quality around the NIH campus is discussed in General Design Guidelines, Section: Site/Civil. To ensure proper water quality, all drainage systems that collect runoff from the parking areas shall be equipped with oil/water separators.

N.2.9 Wastewater:

N.2.9.1 Wastewater Discharge: Only uncontaminated stormwater runoff shall be discharged from the NIH campus to the receiving stream. All wastewaters generated on the NIH campus shall be discharged to the sanitary sewer. Wastewaters

generated on the NIH campus include domestic sewage from the lavatory facilities, nonhazardous waste discharged from laboratory or research area sinks, waters used for cagewashing and animal care, waters used in cafeteria operations, and all floor drains.

N.2.9.2 Wastewater Sampling: The NIH campus is connected to the WSSC sanitary sewer system. The NIH is permitted to discharge wastewater to the WSSC system through a Discharge Authorization Permit. Under the terms of this permit, the NIH must sample its wastewater four times every 6 months and submit an Industrial User Effluent Compliance Permit report to WSSC twice per year.

The wastewater sampling is conducted at two locations where NIH sewers connect to the WSSC system. However, for new laboratory and animal facility construction, the sanitary system shall be designed to allow for sampling at the discharge point from the individual building. This will allow for testing and troubleshooting individual building wastewater streams.

The sampling point shall be designed to allow for installation of a continuous pH monitor, installation of a programmable sampler, and personnel access for grab sampling. Cagewashing facilities shall be provided with a continuous pH monitor and recorder.

N.2.9.3 Wastewater Treatment: Since the NIH utilizes the WSSC system, it is normally not necessary to perform wastewater treatment on campus. However, it may be necessary to provide neutralization and equalization of wastewater streams from some laboratory and animal care buildings to comply with WSSC requirements.

N.2.9.3.1 Laboratory Buildings: To allow for these circumstances, the sanitary system for new laboratory buildings shall be designed with sufficient hydraulic gradient that an equalization or neutralization tank can be installed at a later date without a redesign of the sewer system or the installation of a pump station.

N.2.9.3.2 Animal Facilities: In general, the sanitary system for new facilities that include animal care areas shall be equipped with an equalization or neutralization tank.

N.2.9.4 Tanks: Tanks used for equalization and neutralization of wastewaters can accumulate sludges and hazardous wastes, require maintenance, and cause odor problems. Therefore, equalization and neutralization tanks will not automatically be

installed in new construction. The A/E shall investigate the potential use of the building and attempt to characterize the potential wastewater stream on the basis of this proposed use. Equalization and neutralization tanks shall be included in new construction if the anticipated characteristics of the wastewater stream indicate that these facilities are likely to be required.

N.2.9.5 Silver Recovery: Any facility being designed with darkrooms or photo processing facilities shall have a processing facility for recovering silver from the wastewater stream from the photoprocessing rooms.

N.2.10 Solid Waste:

N.2.10.1 Waste Minimization: All laboratory and animal care facilities at the NIH shall adhere to the Environmental Protection Agency's solid waste management hierarchy, which encourages reduction of waste at the source. This hierarchy emphasizes waste minimization as the first step in sound solid waste management. The utilization of reusable products, which also has the effect of reducing the overall solid waste stream, is also encouraged. Waste products that cannot be reused shall be investigated to determine whether they can be recycled. Only those products that cannot be reused or recycled shall enter the waste stream for energy recovery or landfilling.

In general, solid waste management is an operational function. However, the requirements for environmentally friendly solid waste management must be included in the design of new construction in order for the solid waste management system to be efficient and convenient to use. Ease and convenience are keys to implementation of a successful solid waste management program. All facilities shall be designed with modern and sanitary waste compaction equipment. This equipment shall minimize spillage of wastes and debris and thus the attraction of pests.

One design feature that can assist in waste minimization in laboratories is hazardous substance storage capacity. The A/E should closely examine the anticipated use of the laboratory to determine a reasonable volume of hazardous substances that will be stored in the laboratory to allow efficient laboratory operations. Excessive storage space in a laboratory can result in overpurchasing and hoarding of hazardous substances. This, in turn, can result in excessive hazardous waste generation as

these substances are stored beyond their shelf lives.

N.2.10.2 Recycling: The NIH campus has an active solid waste recycling program. The program is administered by the Office of Research Facilities (ORF). This program establishes white office paper, baled corrugated cartons (OCC), aluminum cans, and polypropylene as primary recycling materials. Mixed paper, wood pallets, scrap metal, polystyrene, food and beverage containers, and yard waste are designated as secondary recyclable materials.

All new construction on the NIH campus shall be designed to be recycling friendly. This consists of designing for the placement of collection containers at convenient locations throughout the building to make it easy for NIH employees to accumulate recyclable materials. The selection of recyclables to be collected; the type, size, and number of collection containers; and the locations for the collection containers must be determined by the A/E on the basis of the planned use of the new facility. For example, more emphasis would be placed on collecting white office paper in an office building than in an animal care facility. The A/E shall coordinate this selection with the ORF, Division of Environmental Protection (DEP).

Support facilities for recycling must also be included in all new construction. These support facilities include space in the loading dock area for storing recyclable materials. Paper products, particularly white paper and OCC, must be kept clean and dry to maintain market value and be stored in a way so as not to attract pests or offer them harborage. These require either a room for storage or an enclosed container. Sufficient container space will also be required for the other recyclable materials. Multicompartment recycling rolloff containers are commercially available and may be used for recyclable storage and transportation. The potential for attraction of pests, such as flies, wasps, or rodents, to these containers must be considered when designing a placement site. The placement of these containers shall not affect personnel using the loading dock.

The A/E may want to consider installing a baler at facilities that are expected to generate sufficient amounts of OCC. A can-flattener should be considered for any facility expected to generate sufficient aluminum cans.

The selection of the recycling support facilities and equipment required for all new construction shall be made by the designer in coordination with the ORF, DEP. Potential options for the loading dock design have been developed by the ORF and

can be used as guidelines by the A/E.

N.2.10.3 Hazardous Waste: All hazardous waste generated on the NIH campus shall be handled in accordance with the NIH's generator and TSD permits. Generally, this requires accumulation of the waste at the generation point, temporary (1 day or less) staging at the building loading dock, and transportation to Building 21 for processing. Any facility that cannot meet this format shall be considered a special exception to these guidelines. The A/E shall develop the solid and hazardous waste design for this building in consultation with the ORS, Division of Safety and the ORF, DEP.

N.2.11 Decommissioning: Prior to the renovation of any facility on the NIH campus, that facility shall be decommissioned. For the purpose of these guidelines, decommissioning is defined as all work required that results in a facility free of chemical, biological, radiological, or other hazardous materials and is ready for reasonable, unrestricted demolition.

Decommissioning shall include an in-depth facility assessment by a qualified environmental engineer. Qualifications shall be reviewed and approved by the DEP and ORS Division of Safety.

The purpose of the facility assessment will be to identify any environmental or other site hazards that could result in the release of hazardous substances during demolition or pose a hazard to workers.

Potential hazards that must be addressed during the facility assessment include, but are not limited to, asbestos-containing building materials (ACBM), lead and lead paint, mercury, underground storage tanks, hazardous substance storage areas, and spills of hazardous materials. Potential hazards are outlined in the "Checklists for Hazardous Substances" dated February 22, 2002, available from the DEP. Because new and changed regulations have an impact on the decommissioning process, Project Officers and A/Es must obtain the latest edition of this document from DEP for each project.

N.2.11.1 Condition Assessments: The condition assessment shall include the following areas to provide quantitative data to back up the qualitative assessment:

- Review of records regarding the design, construction, and use of the building to be demolished and the site
- Review of records regarding responses to hazardous substances spill incidents or other emergencies
- Visual inspection of the building and site
- Sampling and analysis of subject materials

Condition assessments are required for every NIH renovation project, regardless of facility type.

The end result of the condition assessment shall be a Decommissioning Plan for the facility. That plan shall include all recommended procedures for decontamination.

N.2.11.2 Decommissioning Guidelines: Decommissioning guidelines are under development by the DEP. Draft guidelines are outlined in the "Assessment and Decontamination of NIH Facilities for Alterations and Decommissioning" available from DEP. Until final guidelines are published by DEP, ORF guidelines requiring a site/facility assessment prior to demolition shall be required.

N.2.11.3 Decommissioning Plan Review: The DEP shall review and approve all decommissioning plans.

N.2.12 Recycling Demolition Debris: Requirements for recycling demolition debris is outlined in NIH Division 1 Specification Section: "Use, Handling, Storage, Transporting, Accumulation, and Disposal of NIH Controlled Material." This specification section must be included in every construction contract prepared for the NIH.

Prior to mobilization on the site, the demolition contractor shall be required to submit to the ORF, DEP, a waste disposal and recycling plan for the demolition activity. This plan shall identify each type of waste material that will be generated by the demolition. The wastes shall be classified as hazardous waste, general waste, or recyclable waste. The alternatives for disposing or recycling of each type of waste material shall be discussed in the plan, with the objective of recycling as much of the demolition materials as possible. For any material that will not be recycled, the contractor shall be required to document in the plan, to the satisfaction of the DEP, why recycling is not feasible.

P. Security

P.1 Security: Applicability

A separate *NIH Security Design Policy and Guideline* has been developed that contains specific security requirements for new construction of NIH facilities, as well as modifications, renovations, and alterations of existing NIH facilities. The *Security Design Policy and Guideline* also contains specific security requirements for NIH leased facilities.

P.2 General Policy: Nondisclosure Warning

The *NIH Security Design Policy and Guideline* contains law enforcement-sensitive physical security design and construction criteria and standards for NIH buildings and facilities. Disclosure of these data to other than Federal officials or contractors with a specific need to know may compromise security of the facility and its occupants. Portions of the document and the standards and criteria contained therein will be made available ONLY to those Federal officials and contractors, contract employees, and identified consultants who have a direct need for the information to design a specified project. Precautions shall be taken to safeguard and control distribution of any portion of the *NIH Security Design Policy and Guideline*, and any individuals provided copies shall assume responsibility for ensuring that the information is kept secure.

This document is exempt from mandatory public disclosure under provisions of the Freedom of Information Act (FOIA), paragraph 5 USC 552(b)(2). Information contained in the document and the included tables shall be protected from potential adversaries. At a minimum, information should not be subject to disclosure under the FOIA. Users may classify the tables following Classified National Security Information contained in Executive 0rder 12958 and its Implementing Directives.

Contact the NIH Division of Public Safety through the NIH Project Officer for all security information.

Q. Pest Management

Insect and rodent pests carry disease organisms on or in their bodies. They can cause damage by chewing electrical wiring and insulation and contaminate and compromise the research environment. Also, there are aesthetic considerations that make pest control important, since most people find insects and rodents repulsive and unacceptable in the workplace.

Traditionally, pest control consisted of the general application of one or more pesticides. However, there has been a movement away from relying solely on pesticides to solve pest problems in response to public concerns over pesticide use, pesticide resistance, and the possibility that pesticide applications may contaminate the work environment and expose staff to pesticide residues.

In order to provide safe, effective pest control that is compatible with the biomedical research environment, the Integrated Pest Management Section, Division of Safety, has implemented Integrated Pest Management (IPM) programs in all NIH design and construction projects and throughout NIH workplaces. Professional entomologists on the staff of the Occupational Safety and Health Branch manage these programs.

The reliance on pesticides as the sole means to correct pest problems is unacceptable in the NIH biomedical research environment. NIH has implemented effective, long-term prevention methods and strategies that work in unison with the building design and its use. Prevention of pest infestation in and around NIH buildings is important to the health and safety program at NIH and contributes to creating a better work and research environment. Pests are dependent upon biotic factors to provide them nourishment and moisture and abiotic factors to provide them harborage and ingress into buildings. Through steps taken proactively during building planning, design, construction, and commissioning, resources for pests can be minimized, making the building less susceptible to pest infestation during its functional life cycle.

Q.1 Sustainability

Several of the precepts of IPM work in concert with facility sustainability. Energy and water conservation can involve practices that make a facility less attractive to pests. Designing a facility for long-term use aids in pest management since durability and

stability of the building infrastructure and systems make it less susceptible to pest ingress and infestation. Pest management and the pest management program function as part of the building, providing specialized services designed for each area of application. IPM programs change with the building and the use of the building. Despite these efforts, pest problems can develop within a building as it ages or is expanded or modified. Doors do not seal properly, gaps form around slabs, landscaping changes, equipment is removed, and new equipment is installed. The feasibility of effective, long-term pest management is often influenced by the flexibility and adaptability of a building to new or expanded use. For example, to change a room designed for nonhuman primate to rodent holding usually will not create pest-related issues. However, to change from rodents to nonhuman primates will result in a room that is difficult to maintain and will create significant challenges to the pest management program.

Q.2 Integrated Pest Management

Insect and rodent pests such as cockroaches, ants, mice, and rats need food, water, and harborage to survive. The IPM program at the NIH focuses on designing new projects so as not to create conditions that encourage pests and that minimize pesticide applications by reducing the amount of food, water, and harborage available to pests. Practices such as good facility design, excluding pests through sound structural detailing, and proper project construction site sanitation constitute major components of the NIH IPM program.

IPM programs are proactive in preventing pest problems, not reactive to an infestation. IPM programs discourage unnecessary pesticide use and generic prescriptive pesticidal treatments. Each IPM program is specifically designed to meet the individual needs of the area serviced. The success of an IPM program depends on the assistance and cooperation of the management and staff in each facility, particularly so in animal facilities and laboratories.

Improvements in facility design and construction can significantly assist with maintaining good sanitation, housekeeping, and pest prevention. IPM is a safe and effective way to control pests. IPM must be a continuing program in order to manage the environment where pests live and to meet future pest management needs.

Q.2.1 IPM Program Components: The basic components of an IPM program include elements instituted during the design and construction phases as well as operational elements implemented after a facility is occupied. These include:

- Facility Design: Pest problems often can be prevented by the architect/engineer (A/E) taking a proactive approach to designing facilities that do not contribute to the harborage of pests.
- Sanitation/Structural Repairs: Proper sanitation on the construction site, as well as reduction of clutter and pest harborage and performing small repairs that exclude pests, has a significant impact on keeping pests out of buildings during construction.
- Monitoring: Monitoring is the regular surveillance of an area using traps, visual inspections, and interviews with staff. Surveys are conducted to determine whether a pest problem exists, the location and size of the pest infestation, and conditions that may contribute to pest problems.
- Communication: Staff cooperation in correcting conditions that contribute to pest problems is essential to the success of an IPM program.
- Record-Keeping: Monitoring data on pest numbers and observations on housekeeping and structural deficiencies are recorded in a logbook in each facility.
- Pest Control Without Pesticides: IPM practices such as pest exclusion, trapping, screening, and caulking are effective, long-term methods of pest prevention. Nonpesticidal pest control practices can be effective and applied with a high degree of safety.
- Pest Control With Pesticides: Pesticides are a small part of an IPM program and are applied using the safest, most effective methods of application, and only where needed.
- Program Evaluation: Monitoring data and observations are periodically summarized and reviewed to evaluate program effectiveness.
- Safety: IPM significantly reduces the use of pesticides and encourages the use of more permanent nonpesticidal control practices. This practice helps minimize the potential of exposure to pesticides by patients, the research environment, and NIH staff.
- Quality Assurance: Technical oversight provides an objective, ongoing evaluation of program activities and effectiveness.
- NIH Integrated Pest Management Section: The NIH Integrated Pest Management Section, Occupational Safety and Health Branch, Division of Safety, manages

IPM programs in NIH animal care and laboratory facilities and is involved during the planning, design, and construction phases of new construction and alteration projects. The Project Officer and design team shall involve the IPM Section early during the planning and design process for any project to obtain input on proposed designs from the pest management perspective.

Q.3 Facility Design Elements

IPM is a comprehensive approach to preventing pests from harboring around, entering, or infesting NIH facilities. This is critical in the research laboratory and animal facility environments but is equally important for all building types that the NIH designs and constructs.

Buildings must be designed and constructed to promote cleaning. This entails employing designs and materials that minimize gaps, voids, and inaccessible spaces. Construction materials must be durable and chosen for the proper application. Since the integrity of the building diminishes over time, gaps, holes, and voids can create areas where debris can accumulate and pests can harbor.

Some of the components of facility design and construction that impact an effective pest prevention program are:

- Overall facility design and construction, including the materials and construction detailing and the equipment and construction processes used to build the facility. Facility components and layout should minimize points of pest ingress and harborage and optimize accessibility for cleaning, sanitation, and pest inspection.
- Building integrity. Closing cracks, crevices, and voids; penetrations through floors, walls, and ceilings; surface protection; and treatment and finishes affect pest activity.
- Landscape design and management.
- Lighting on the site and building exterior.
- Shipping and receiving areas, including the loading dock and storage facilities.
- Personnel entry points.
- Solid waste management and removal.
- Recycling activities.
- Housekeeping and sanitation, throughout the surrounding building area and inside the facility.

- Pest management service implemented during construction.
- Requirements specific to animal facilities (see Animal Research Facilities, Section: Programmatic Goals and Objectives and Section: Design Criteria).
- Staff support areas, including break rooms, locker rooms, and food preparation areas and equipment, as well as administrative and conference space.
- Facility durability and sustainability. Over the life cycle of a facility, changes in the envelope, interior layout and equipment, and animal facility use and program changes have a direct influence on pest activity in and around a facility.

Q.4 Pest Management Consultation, Design Review, and Program Support

The Project Officer and the A/E shall contact the NIH Division of Safety (DS), Integrated Pest Management Section, during the early planning stages of any design project to ensure that the design addresses all areas relative to pest management. These design areas include:

- Design Concept. If the facility is to contain structural/design components that pose a potential or known pest problem, this should be considered as early as possible in the design phase.
- Facility Fit-Out. Some materials and equipment are undesirable or unacceptable from a pest prevention and control standpoint and should not be used.
- Onsite Consultation. Pest management staff can provide support during site visits and inspection during all phases of planning, design, construction, and renovation.
- Pest Management Services Oversight. All projects must maintain a pest surveillance and control program during all phases of construction. DS must review and approve all IPM services plans and inspect all pest management services delivered by construction contractor personnel to ensure efficacy and IPM program quality.

Q.5 Pest Management Services During Construction

IPM services for the control of pests are required on all NIH construction sites during all phases of construction. NIH Division 1 Specification Section “Temporary Facilities and Controls” outlines the requirements that must be incorporated into every NIH construction project.

Q.6. Specific Design Elements

The following elements offer specific design suggestions that can greatly contribute to a successful IPM program. The A/E should incorporate these into the design as applicable.

Q.6.1 Architectural Design: Exterior architectural features, including the development of the facade and roofing design, must be evaluated with respect to their potential for the occurrence of pests. For example:

- Recessed windows, ledges, flat roofs, roof edges, columns, and so on can provide roosting spots for birds.
- Overhangs or sunshades can be nesting sites for wasps or birds.
- Runoff from the roof can attract and support pests around the building exterior.
- Entranceway overhangs can provide nesting sites for birds and stinging insects.
- Use of hollow metal construction materials, particularly in windows, are potential nesting sites for stinging insects.
- Roof gardens or eating areas will attract pests.
- Roof vents and air intakes can be points of ingress for birds and insects.
- Facades that are recessed and wall-mounted lighting provide nesting sites for birds and stinging insects.
- Elevated planters can become harborage for rodents and accumulate debris and food trash.

These issues can create problems that will have an impact on the use of the building and ongoing maintenance and will be expensive to correct once the building is completed.

Q.6.2 Landscape Design and Management: Landscape planting, for both aesthetic and functional needs, can impact the number and types of pests found around the exterior of the building as well as within the building envelope. For example, dense ground covers such as ivy provide cover and harborage for rodent pests. Ornamental plants such as spirea are attractive to certain beetle species that can become a pest indoors. Mulch can provide food for termites, and dense foundation plantings can reduce air circulation around buildings, harbor pests such as wasps, and obstruct pest management survey and control activities. Raised planters or garden beds can be nesting sites for rodents. An open perimeter boundary around

the entire facility is recommended. This barrier should be wide enough to facilitate inspections around the building and should be constructed from materials that are durable, do not obstruct grass-cutting or maintenance activities, and prevent encroachment of grasses or weeds around the exterior of the building.

Q.6.3 Lighting: Lights are attractive to insects and to some vertebrates. The type and placement of lights around and in a facility can impact the occurrences of pests and nuisance incidental invaders indoors. Wherever possible, locate lights away from the building, thereby attracting pests away from the building. Lights should not be placed directly over loading dock doors or personnel doors. Lights that are less attractive to insects, such as sodium vapor types, are recommended. The design of the light fixture and the installation of the fixture can provide pest harborage outside a building. Overhead lights with a flat upper surface can provide a nesting or roosting site for birds. The power conduit for the lights must be designed so that it does not provide roosting or nesting sites for nuisance birds.

Q.6.4 Shipping and Receiving, Including the Loading Dock and Storage Facilities: The loading dock is the central point of activity in a building. Most goods and supplies enter or leave through this area. Solid waste is often containerized at the loading dock. According to the amount and duration of activity, the loading can be a point of pest ingress for the following reasons:

- Doors often remain open for extended periods of time.
- Solid waste and recyclables, which are attractive to pests, are containerized and stored at the dock.
- Outside air can be pulled into negative buildings along with pests.
- Proper cleaning and sanitation are often difficult to achieve.
- Because of heavy industrial use of this area, maintenance issues can contribute to pest problems.

The loading dock should provide a buffer between the exterior and the interior of the building. Air screens, specialty doors, plastic strip doors, and electric insect light traps should be used to create a positive barrier to pests.

The loading dock should be considered an extension of the building interior. The materials used to construct the dock should provide durability, ease of cleaning, pest exclusion, and accessibility for pest management services. In addition, the loading dock should have adequate space and lighting for proper marshalling, inspection,

and cleaning of materials received and shipped from the building. Solid waste containers should not be stationed directly in front of overhead doors. Clean deliveries and deliveries of food should not be comingled with waste and "dirty" areas of the dock.

See Animal Research Facilities, Section: Design Criteria, for specific guidelines related to loading docks that directly support an animal facility.

Q.6.5 Personnel Entry Doors: Building doors should be fitted with sweeps and seals that effectively exclude insect and rodent pests. Automatic or self-actuated sweeps are not recommended. Brush-type sweeps, along with bristle material that covers the entire perimeter of the door, are preferred. Doors must be durable and cleanable. Doors for use in an animal care facility must meet special design and construction requirements. See Animal Research Facilities, Section: Design Criteria, for door specification requirements.

Q.6.6 Solid Waste Management, Removal, and Recycling: Management of solid waste and recyclables impacts building design and construction in three ways.

- Temporary storage of materials inside the laboratory
- Marshalling and disposing of waste materials through the building
- Containment and removal of waste from outside the building

Any area designated to hold waste material must be durable, cleanable, and constructed to minimize gaps and voids since they obstruct cleaning efforts and can become a reservoir for spills, debris, and pests. Solid waste containment equipment must be sited to minimize attraction of pests into the facility and to maximize cleaning and sanitation.

Q.6.7 Housekeeping and Sanitation: Proper sanitation is critical to effective pest management in all buildings. All buildings must be equipped with appropriately sized housekeeping closets located throughout the facility to adequately serve its needs. For specific housekeeping closet requirements, see Biomedical Research Laboratories, Section: Space Descriptions, and Animal Research Facilities. These space standards should be applied to housekeeping closets in other building types. Appropriate construction materials help to promote cleaning and sanitation. Improper installation during the fitting-out phase of the building will create long-term obstacles to good sanitation and potentially foster rodent and insect infestation problems.

Q.6.8 Building Integrity: Closing holes, gaps, and voids is important to long-term prevention of pests. The closing of wall, floor, and ceiling penetrations, with the appropriate sealant, must be designed into all projects and performed during construction.

Wall-mounted equipment and fixtures must be sealed when installed. The intent of this sealing is twofold. First, to deny pests, particularly insects, points of ingress and harborage sites in the building. Rodents can be prevented from entering a building by performing thorough sealing of the building envelope. Mice can move through a hole 6 mm or larger, and rats can get through a space 12 mm or larger. Second, to help promote sanitation and housekeeping by making areas easier to routinely clean and minimize the extent that spills may soil or contaminate an area. Caulking and sealing must be applied to all components of a facility, including but not limited to the following elements: building envelope, plumbing, and electrical and the installation of equipment, furnishings, and amenities in the fitting out of the building.

Caulking and sealing are not replacements for good design and construction. It is more desirable not to design and construct gaps, voids, and recesses than it is to seal them after construction. Extensive sealing will add to the long-term operation and maintenance cost of a facility since sealants often must be removed and reapplied numerous times to maintain integrity over time.

Specialized areas or areas designed for unique functions will have additional caulking and sealing requirements. The design team must contact the NIH Integrated Pest Management Section to obtain additional program-specific caulking and sealing information. This information is available in the IPM document *Caulking and Sealing Requirements for NIH Animal Facilities*.

Q.6.9 Personnel Support: Personnel/staff support areas, such as break rooms, kitchenettes, locker rooms, showers, conference facilities, cafeterias, and vending facilities, must all be designed and constructed to meet the rigorous use to which they will be subjected. Recommendations include:

- Use commercial-grade cabinetry in all break rooms and kitchenettes.
- Install lockers on legs. Do not install lockers on a void base, and if possible, do not recess lockers inside walls. Use open-wire lockers wherever feasible.

- Size kitchens properly for expected use. Use commercial-grade, National Sanitation Foundation-approved kitchen equipment, installed to maximize cleaning, and provide adequate ventilation.
- Do not recess trash or recycling containers inside cabinets or walls.
- Specify durable, highly cleanable finishes that can be sanitized with strong detergents and cleaning products in all vending areas.
- Lockers and locker rooms must be thoroughly caulked and sealed.
- Pay attention to the placement and design of outside eating areas for building staff to minimize attraction of pests into the facility and facilitate waste removal.

Sanitation and housekeeping are the primary issues in all personnel support areas. These areas receive extensive use, often 7 days per week. Areas not adequately designed can become cluttered and dirty, be a source of pests and odors, and present health and housekeeping problems.

The use of proper materials can provide additional safeguards against pest problems. See General Design Guidelines, Section: Architecture, for additional finish requirements to promote sanitation and minimize pest problems.

Q.7 Requirements Unique to Animal Facilities

Animal facilities present some of the most challenging circumstances to an effective pest management program and the performance of pest management services. Additional care and attention must be paid during all phases of planning, design, and construction of animal facilities.

Some of the components that require specialized design and review by the NIH Integrated Pest Management Section include:

- Building integrity (site design, building envelope, and exterior building lighting).
- Receiving areas. See Animal Research Facilities, Section: Space Descriptions, for loading dock design requirements.
- Interior wall, floor, and ceiling finishes.
- Door types, locations, and materials.
- Wall and door protection design and materials.
- Access panels.

- Caulking and sealing locations and details. Refer to the IPM Section's document *Caulking and Sealing Requirements for NIH Animal Facilities*.
- Interior lighting.
- Cagewash design.
- Solid waste disposal, recycling, and storage facilities.
- Floor drains.
- Locker rooms and break rooms.
- Administration areas.

These items must be evaluated and reviewed with respect to the overall program requirements of the entire building, specific animal species, size of the facility, and anticipated future use(s) of the facility.

R. Construction Specifications

The NIH Office of Research Facilities has adopted the use of the American Institute of Architects (AIA) MASTERSPEC® Specification System, including the MASTERSPEC® specification text and supporting documents, as the basis for all construction contract document specifications. MASTERSPEC® is published by Architectural Computer Services, Inc. (ARCOM) under a licensing agreement with the AIA and is available exclusively from ARCOM at (800) 424-5080. Architect/engineers (A/E) developing construction documents for NIH projects must obtain NIH specifications from ARCOM.

Requirements outlined in the NIH Design Policy and Guidelines and any project-specific variances to the Guidelines that have been granted MUST be adhered to in the development of contract specifications and incorporated into the development of the contract documents. Technical requirements shall be fully defined and coordinated throughout the specifications.

R.1 Specification Sections

NIH Specifications Sections have been based on the latest edition of MASTERSPEC® and, where available, the 1999 edition of the General Services Administration (GSA) specification. The sections have been modified for use in the NIH building construction program. Where an NIH section exists, comparable MASTERSPEC® or GSA sections shall not be used. See MASTERSPEC® "Table of Contents and Instructions for Use" for additional information on preparation of NIH construction specifications.

R.1.1 Quality Control Versus Quality Assurance: Quality Control is the responsibility of the construction contractor. Quality Assurance is the responsibility of the NIH.

R.1.1.1 Terminology: The A/E must change the terminology used throughout Divisions 2 through 16 of the MASTERSPEC® documents. Most technical sections in MASTERSPEC® Divisions 2 through 16 include a paragraph titled "Quality Assurance." "Quality Assurance" is also used in verbiage throughout these technical sections.

For all NIH projects, all references to "Quality Assurance" must be changed to "Quality Control" to assign responsibility to the construction contractor. Further clarification of project-specific exceptions to this general policy may occur and will be defined, when applicable, by the NIH Project Officer.

R.1.2 Available Division 1 General Requirements Sections: The NIH Division 1 Sections have been developed to reflect the requirements outlined in the "NIH Conditions of the Construction Contract" and NIH-specific requirements. The designer must coordinate with the Project Officer and the NIH Contracting Officer during development of the specifications to ensure coordination with the project solicitation.

These sections are guides only and must be edited by the designer to be project specific. Many of the NIH unique requirements have been incorporated into these sections.

Division 1 – General Requirements

Section Number	Section Title
01100	Summary
01140	Work Restrictions
01230	Alternates
01260	Options
01270	Unit Prices
01310	Project Management and Coordination
01320	Construction Progress Documentation
01322	Photographic Documentation
01330	Submittal Procedures
01400	Quality Requirements (See Note 1.)
01420	References
01450	Construction Quality Control (See Note 1.)
01500	Temporary Facilities and Controls
01548	Use, Handling, Storage, Transporting, Accumulation and Disposal of NIH Controlled Materials (See Note 2.)
01550	Temporary Traffic Controls
01595	Safety and Health (See Note 3.)
01600	Product Requirements
01700	Execution Requirements
01731	Cutting and Patching

01732	Selective Demolition
01735	Fire Prevention Precautions for Hot Work
01770	Closeout Procedures
01781	Project Record Documents
01782	Operations and Maintenance Documentation
01820	Demonstration and Training

Note 1: Both Division 1 "Section 01400 - Quality Requirements" and Division 1 "Section 01450 - Construction Quality Control" are required to be prepared and included in each construction project. Section 01400 is integral to the general technical requirements specified in the MASTERSPEC® Divisions 2 through 16. Section 01450 specifies the unique requirements of the NIH Construction Quality Control Program.

Note 2: Specification Section 01548, "Use, Handling, Storage, Transporting, Accumulation and Disposal of NIH Controlled Materials," **must** be included in every construction contract. Failure to include this section in all projects increases the potential for environmental pollution and liability.

Note 3: Specification Section 01595 "Safety and Health" must be included in every construction contract. This section provides general safety and health requirements during construction.

R.1.3 Available Divisions 2 Through 16 Technical Sections: All technical sections shall be developed from MASTERSPEC® sections and modified to reflect the requirements of the NIH. Where an NIH section exists, it shall be used in lieu of a comparable MASTERSPEC® section. As additional sections are developed by the NIH to reflect specific requirements of the NIH construction program, they will be incorporated in subsequent MASTERSPEC® releases.

These sections are guides only and must be edited by the designer to be project specific. These sections incorporate specific technical requirements that are necessary for projects at the NIH that require the use of these technical sections. Any clarification on the use of specific sections shall be referred to the Project Officer.

Section Number	Section Title
Division 9 – Finishes	
09671	Resinous Flooring

Section Number	Section Title
Division 13 – Special Construction	
13280	Removal of Asbestos Materials

NIH Design Policy and Guidelines

Appendices

Office of Research Facilities

Appendix 1
Glossary of Terms, Abbreviations, and Units of Measure

1.A Abbreviations

This list includes many of the terms and abbreviations used throughout the NIH Design Policy and Guidelines. It is not intended to be an all-inclusive list.

AAALAC	Association for Assessment and Accreditation of Laboratory Animal Care
AABC	Associated Air Balance Council
AASHTO	American Association of State Highway and Transportation Officials
ABSL	animal biosafety level
AC	alternating current
ACRF	Ambulatory Care Research Facility
ADAAG	Americans with Disabilities Act Accessibility Guidelines
A/E	architect and engineer
AEIC	Association of Edison Illuminating Companies
AFF	above finished floor
AHA	American Hospital Association
AHA	animal-holding area
AHU	air-handling unit
AIA	American Institute of Architects
AIC	ampere interrupting capacity
AIDS	acquired immunodeficiency syndrome
AMCA	Air Movement and Control Association
ANSI	American National Standards Institute
ASHRAE	American Society of Heating, Refrigerating, and Air-Conditioning Engineers
ASME	American Society of Mechanical Engineers
ASPE	American Society of Plumbing Engineers
ASTM	American Society for Testing and Materials
ATC	automatic temperature control
ATS	automatic transfer switch

AWG	American Wire Gauge
AWG	average water gauge
AWS	American Welding Society
AWS	animal-watering system
AWWA	American Water Works Association
B&F	Building and Facilities
BFP	backflow prevention
BOCA	Building Officials and Code Administrators, International
BSC	biological safety cabinet
BSL	biosafety level
CADD	computer-aided design and drafting
CAN	common accounting number
CAV	constant air volume
CBM	Certified Ballast Manufacturers
CCC	Clinical Center Complex
CDC	Centers for Disease Control and Prevention
CG	compressed gas
CGA	Compressed Gas Association
CMU	concrete masonry unit
CO_2	carbon dioxide
CPT	control power transformer
CQM	construction quality management
CRF	capital recovery factor
CRI	color rendering index
CW	cold water
D&T	diagnostic and treatment
DC	direct current
DDC	distributive digital control
DDS	distribution duct system
DGR	dedicated ground riser
DIL	dynamic insertion loss
DISS	diameter index safety system
DNA	deoxyribonucleic acid
DOE	Department of Energy
DPPA	Division of Policy and Program Assessment

DTR	dental treatment room
DWV	drain, waste, and vent
EA	Electronic Industries Association
EDP	electronic data processing
EF	exhaust fan
EI	electromagnetic interference
ELM	equivalent linear measurement (of laboratory work space)
EMC	electrical metal conduit
EMO	external manual operator
EMT	electrical metal tubing
EPR	ethylene propylene rubber
ETL	Electronic Testing Laboratory
ETO	ethylene oxide
FCC	Federal Communications Commission
FTE	full-time employee
GFI	grand fault interrupting
GSA	General Services Administration
HEPA	high-efficiency particulate air
HIR	halogen infrared
HOA	hand-off-auto
HVAC	heating, ventilation, and air conditioning
HW	hot water
HWR	hot water recirculating
IAQ	Indoor air quality
IBC	International Building Code
ICC	International Code Council
ICU	intensive care unit
IEC	International Electrotechnical Commission
IEEE	Institute of Electrical and Electronics Engineers
IESNA	Illuminating Engineering Society of North America
IETA	International Electrical Testing Association
JCAHO	Joint Commission on the Accreditation of Healthcare Organizations

LA	laboratory air
LAN	local area network
LPI	Lighting Protection Institute
LS	limit switch
LV	laboratory vacuum
MA	medical air
MBC	modular building controller
MCB	main circuit breaker
MCC	motor control center
MDE	Maryland Department of the Environment
MEP	mechanical/electrical/plumbing
MG	medical gas
MH	metal halide
MHPCU	mental health patient care unit
MLO	main lugs only
MOV	metal oxide varistor
MRI	magnetic resonance imaging
MS	mass spectrometry
MS&N	medical, surgical, and nursing
MW	molecular weight
NC	noise criteria
NEC	National Electrical Code
NEMA	National Electrical Manufacturers Association
NESC	National Electrical Safety Code
NFC	National Fire Codes
NFPA	National Fire Protection Association
NHP	nonhuman primates
NIH	National Institutes of Health
NIOSH	National Institute of Occupational Safety and Health
NIST	National Institute of Standards and Technology
NMR	nuclear magnetic resonance
NO	nitrous oxide
NRC	noise reduction coefficient
NSF	National Science Foundation

ORF	Office of Research Facilities
ORS	Office of Research Services
OSHA	Occupational Safety and Health Act (or Administration)
PAQ	perceived air quality
PAR	post-anesthesia recovery
PC	personal computer
PEPCO	Potomac Electric Power Company
PET	positron emission tomography
PF	power factor
PHS	Public Health Service
PILC	paper-insulated, lead-covered
PLC	programmable lighting control
POR	Program of Requirements
PRV	pressure-reducing valve
PTFE	polytetra fluoroethylene
PVC	polyvinyl chloride
PWM	pulse-width modulation
R	ratio (R-value)
RC	room criteria
RCR	room cavity ratio
RFI	radio frequency interference
RGS	rigid galvanized steel
RH	relative humidity
RO	reverse osmosis
RTU	remote terminal unit
SAMA	Scientific Apparatus Makers Association
SCADA	Supervisory Control and Data Acquisition
SCR	silicone-controlled rectifiers
SCU	stand-alone control unit
SDR	standard dimension ratio
SE	service entrance
SM	smoke
SMACNA	Sheet Metal and Air Conditioning Contractors' National Association
SPF	specific-pathogen free
STC	sound transmission class

TAB	testing and balancing
T&B	testing and balancing
TEC	terminal equipment controller
THD	total harmonic distortion
TIA	Telecommunications Industries Association
TMMS	thermal manual motor starter
TVSS	transient voltage surge suppression
UDF	unit directional flow
UFAS	Uniform Federal Accessibility Standards
UL	Underwriters Laboratories
UPS	uninterruptible power supply
UPW	uniform present worth
UTP	unshielded twisted pair
VAV	variable air volume
VCT	vinyl composition tile
VFD	variable-frequency drive
VOC	volatile organic compound
VR	ventilation rate
VSD	variable-speed drive
VSI	voltage-source inverter
WHO	World Health Organization
WSSC	Washington Suburban Sanitary Commission

1.B Units of Measure

A	ampere
cd	candela
cm	centimeter
cph	changes per hour
dB	decibel
°C	degrees Celsius
g	gram
h	hour
Hz	hertz
J	joule
°K	degrees Kelvin
kg	kilogram
kHz	kilohertz
kJ	kilojoule
kPa	kilopascal
kV	kilovolt
kVA	kilovolt-ampere
kW	kilowatt
kWh	kilowatt hour
L	liter
L/s	liters per second
LPM	liters per minute
LPW	lumens per watt
lux	lux
m	meter
m^2	square meter
mA	milliampere
MCM	thousand circular mils
min	minute
MJ	megajoule
mL	milliliter
mm	millimeter
mm Hg	millimeters of mercury
mRem	millirem
m/s	meters per second
n	nano
nm^2	nanometer squared
nm^2	net square meter
Pa	pascal
%	percent
ppm	parts per million
rad	radian
rpm	revolutions per minute
s	second
V	volt
VA	volt-ampere
W	watt

1.C Gross and Net Area Calculations

See Biomedical Research Laboratories, Section: Programmatic Goals and Objectives and Animal Research Facilities, Section: Programmatic Goals and Objectives for specific grossing factors for these facility types.

1.C.1 Gross Area

The gross area includes the total floor area of all floors including basements, mezzanines, penthouses, mechanical, electrical, and communications spaces, and enclosed loading docks.

Gross area is measured from the exterior surfaces of all enclosing walls, except where the exterior wall surface overhangs the exterior window surface by 300 mm or more. In this case, the gross area is measured from a point one-half the distance between the exterior plane of the window glazing and the outermost plane of the wall. Disregard architectural projections such as cornices and buttresses, and roof overhangs less than 300 mm. The average distance from the floor to the ceiling is used to determine whether a floor area is included at 100 percent or 50 percent in the gross area.

All areas with a floor-to-ceiling height of 2 134 mm or greater are counted at 100 percent.

All areas with a floor-to-ceiling height less than 2 134 mm are counted at one-half of the actual gross area, unless otherwise noted not to be included in the gross area. The following additional spaces are counted at one-half of the actual gross area:

- Exterior balconies and porches
- Covered, but not enclosed, walkways, passageways, ramps, and covered building entrances
- Exterior open stairs, whether covered or uncovered

The following areas are not counted in the gross area:

- Crawl spaces or any area with a floor-to-ceiling height of less than 1 220 mm. Crawl spaces in excess of 1 200 mm are not counted in the gross area providing the clear height is the result of the natural site terrain or foundation system. It is

expected that the depth of footings, lack of interior finish, and so forth will support the position that this area is used for limited access only and for no other purpose. The height of crawl spaces is the distance between the surface of the earth or mud-slab and the bottom of any framing members. It is expected that girders, pipes, or ducts may occasionally protrude below this height.

- Catwalks providing access to equipment
- Exterior, uncovered, unenclosed terraces, ramps, stoops, or pads
- Open courtyards and plazas
- Utility tunnels
- Cooling towers
- Unroofed exterior equipment enclosures
- Unfinished attics

Shaft-type elements are counted in the gross area for one floor only. These include:

- Atria
- Unenclosed floor openings
- Stairs
- Elevators, escalators, and dumbwaiters
- Mechanical and electrical shafts
- Other shafts connecting two or more floors

1.C.1.1 Interstitial Distribution Space: Interstitial distribution space, an expansion of the space between the finished ceiling and the underneath side of the floor above used for utility distribution purposes (i.e., ducts, electrical and communications lines, and plumbing) only, is not included in the gross area calculation. Any floor area dedicated to equipment and which provides maintenance access (walk-on deck) within the interstitial distribution space is included in the gross area calculation at 100 percent regardless of the floor-to-ceiling height.

1.C.2 Net Area

The net floor area of a space refers to those portions of the facility available for use for program operations and other necessary support functions. These areas are specifically delineated in the Program of Requirements (e.g., a 12 net square meter office, a 10 net square meter outpatient examination room). The sizes of net areas represented on design drawings or actually constructed are measured from the

interior surface of the walls that enclose the space. Exterior walls, interior partitions, columns, structural members, plumbing chases, and internal circulation space for other than individual occupancy are excluded from the net floor area.

Appendix 2
History of NIH Design Policy and Guidelines

The revised NIH Design Policy and Guidelines evolved from earlier iterations of guideline documents and lessons learned from design and construction projects.

Guidelines Historical Timeline

2003 1999/2000 NIH Design Policy and Guidelines reorganized by category and discipline. New information added to document. Consolidation into a single user-friendly document from previously freestanding planning and programming documents and design and construction documents.

1999/2000 Updates and revisions made to the 1996 Design Policy and Guidelines.

1996 NIH Design Policy and Guidelines developed using existing technical criteria from numerous sources involved in the design and construction of laboratory, animal, and clinical facilities.

1993 Original NIH Planning and Programmatic Guidelines developed.

1992 Rose Book developed.
Generic Technical Criteria for the Clinical Center developed.

1989 Postal Service "Kit of Parts" concept adopted by the NIH to develop program for Building 49. No actual NIH guidelines existed at this time.

Acknowledgements – Spring 2003 Edition

The NIH Design Policy and Guidelines Executive Steering Committee is a multi-discipline team comprising senior professionals in the Office of Research Facilities, Division of Policy and Program Assessment. The Division of Policy and Program Assessment develops and maintains technical criteria and standards, including the NIH Design Policy and Guidelines, for application to the NIH facility design and construction program.

The NIH Design Policy and Guidelines Executive Steering Committee compiled information, authored material, coordinated subcommittee recommendations, and reviewed and edited the document for publication.

Executive Steering Committee Members

Farhad Memarzadeh	Chief, Executive Steering Committee
Sheri Bernstein	Senior Science Coordinator
Charles Blumberg, FIIDA	Architect
Ricardo Herring, FAIA	Senior Architect
Reza Jafari, P.E.	Senior Electrical Engineer
Lou Klepitch, P.E.	Fire Protection Engineer
Debbi LoCicero, AIA	Senior Architect
Sushil Nagpaul, P.E.	Senior Mechanical Engineer
John Pavlides, P.E.	Senior Structural Engineer

The effort to develop and revise the Spring 2003 NIH Design Policy and Guidelines could not have been accomplished without the dedication, contribution, and assistance of representatives from the NIH, other Federal Government agencies, and the private sector. Subcommittees were composed of architects, engineers, facility managers, operations and maintenance staff, scientists, and veterinarians to bring the broadest perspective to the development of the guidelines.

NIH Contributors and Reviewers

Gene Bingham, D.V.M., Ph.D.	NIMH
Patricia Brown, V.M.D.	OIR/OACU
Clarence Bruce	ORS/DPS
Richard Charles, P.E.	CIT
Capt. Terry L. Christensen, P.E.	ORF
Capt. Judith Davis, D.V.M., M.S.	NINDS and NIDCD
Mike Erdos	NHGRI
Henry Fales, Ph.D	NHLBI
Babak (Bob) Farapour, P.E.	ORF
Alfred Ferruggiaro, M.S. C.I.H.	ORS/DS/OSHB
Stella Serras-Fiotes, AIA	ORF

NIH Contributors and Reviewers (continued)

Prem Garg, P.E.	ORF
Shawn Googins, M.S., C.H.P.	ORS/DS/RSB
Eric Hoover, P.E.	ORF
Herbert B. Jacobi, M.S.	ORS/DS/OSHB
Marlene Jefferson, AIA	ORF
Fred Khoshbin, R.A.	ORF
Byung Chil (BC) Kim	ORF
Brian Byung Kong, P.E.	ORF
Alan Koretsky, Ph.D.	NINDS
Frank Kutlak, R.A.	ORF
Kelvin Lawson	ORF
Greg Leifer, C.E.M.	ORF
Jim Lewis, P.E.	ORF
Thomas Ligis	ORF
R. Trevor Lubbert, B.C.E.	ORS/DS/OSHB
Kathy McLellan	ORS/DS/RSB
Dave Mitchell	ORF
Rand Mortimer, M.S.	ORS/DS/OSHB
Chris Newcomer, V.M.D.	ORS/VRP
Buz Orrison	ORF
Leon F. Pheder, P.E.	ORF
James Raber, D.V.M., Ph.D.	NEI
Cyrena Simons	ORF
James Spears	ORS/SS
ORF/Division of Environmental Protection	Staff
Capt. Glen Stonebraker	ORF
James Taylor, D.V.M., M.S.	OIR/OACU
Esmail Torkashvan, P.E.	NCRR/DRI
John Vilgos, P.E.	ORF
Adam Wolfe, Ph.D., P.E.	ORF

Other Contributors and Reviewers

Brian Black	Eastern Paralyzed Veterans Association
Ellen Harland, AIA	Accessibility Consultant
Marsha Mazz	U.S. Access Board
William Stratton, AIA	Louviere, Stratton & Yokel
Dennis Talton, R.A.	Naval Facilities Engineering Command
Mary Shearill-Thompson	General Services Administration
Carole Wharton	Oudens & Knoop
Uri Yokel, AIA	Louviere, Stratton & Yokel
Krishnan Ramesh, P.E.	Affiliated Engineers Inc.
Jason Cohan	Affiliated Engineers Inc.

Capital Consulting Corporation staff members performed editing, production, and Web publication to prepare the Spring 2003 edition of the NIH Design Policy and Guidelines for final publication. Technical editing of the entire document was performed by Wendel Schneider.

Appendix 3
Health and Safety Regulations, Codes, and Standards

3.A General Health and Safety

The latest edition/revision of all references cited (Regulations, Executive Orders, Standards, Manual Issuances, and Guidelines) shall be used.

3.A.1 Federal Regulations and Executive Orders: Occupational Safety and Health Administration (OSHA), Title 29 of the Code of Federal Regulations (29 CFR)

Part 1910 - General Industry Standards	
Subpart D	Walking - Working Surfaces (1910.21-.30): placement and structure of platforms, catwalks, etc.
Subpart E	Means of Egress (1910.35-.38): employee's emergency escape requirements
Subpart G	Occupational Health and Environmental Control (1910.94-.100): ventilation, noise control, ionizing/nonionizing radiation
Subpart H	Hazardous Materials (1910.101-.126): storage, handling of hazardous materials
Subpart J	General Environmental Controls (1910.141-.147) safety color coding and lock-out/tag-out systems
Subpart L	Fire Protection (1910.155-.165): sprinkler, detection, and alarm systems
Subpart N	Materials Handling and Storage (1910.176-.184): cranes, conveyance systems
Subpart O	Machinery and Machine Guarding (1910.211-.219): mechanical equipment (hard wired and/or designed in) and power-transmission apparatus
Subpart S	Electrical (1910.301-.399): design safety standards, hazardous locations, special-purpose systems, and safety-related maintenance requirements (design in)
Subpart Z	Toxic and Hazardous Substances (1910.1000-.1450): protection from airborne hazardous substances; provides specific guidance to toxic chemicals, e.g., ethylene oxide (see 1910.1047)

Part 1926 - Construction Industry Standards	
Subpart C	General Safety and Health Provisions (1926.20-.35): fire protection, illumination, and sanitation during construction
Subpart D	Occupational Health and Environmental Controls (1926.50-.66): protect workers, public from noise, radiation, gases/vapors, asbestos, lead, and emergency response
Subpart E	Personal Protective and Life Saving Equipment (1926.95-.107): PPE, lifelines, and safety nets
Subpart F	Fire Protection and Prevention (1926.150-.159): materials protection against ignition sources, extinguishers
Subpart G	Signs, Signals and Barricades (1926.200-.203): warning signs, signals, and barriers around construction
Subpart H	Materials Handling Storage, Use and Disposal (1926.250-.252): movement of materials; disposal of construction debris
Subpart J	Welding and Cutting (1926.350-.354): fire protection and exposure protection
Subpart K	Electrical (1926.400-.449): electrical systems in construction related to worker/public protection
Subpart L	Scaffolding (1926.450-.454): requirements of design and use
Subpart M	Floor and Wall Openings (1926.500-.503): use of guardrails, handrails, etc.
Subpart N	Cranes, Derricks, Hoists, Elevators and Conveyors (1926.550-.556): materials movement systems use
Subpart O	Motor Vehicles, Mechanized Equipment and Marine Operations (1926.600-606): construction vehicles and material-handling equipment
Subpart P	Excavations (1926.650-.652): trenching and shoring requirements
Subpart Q	Concrete and Masonry Construction (1926.700-.706): requirements related to construction with these building materials
Subpart R	Steel Erection (1926.750-.753): assembly requirements
Subpart T	Demolition (1926.850-.860): removal, storage, and disposal of building materials
Subpart V	Power Transmission and Distribution (1926.950-.960): grounding, overhead/underground lines
Subpart X	Stairways and Ladders (1926.1050-.1060): setup, construction, and use requirements for temporary activities
Subpart Z	Toxic and Hazardous Substances (1926.1100-.1152): protection against exposures from use of chemicals

Part 1960 - Federal Employee Safety and Health Programs (Latest Edition)	
Subparts A-K	Requirements to establish and maintain Federal Agency OSH programs
Executive Order	
Executive Order 12196	Occupational Safety and Health Programs for Federal Employees, effective July 1980

3.A.2 State Regulations

- **Maryland Occupational Safety and Health Administration:** Code of Maryland Regulations (COMAR), Title 9, Subtitle 12, Chapter 20, Occupational Safety and Health
- Refer to local and State occupational safety and health administration guidelines.

3.A.3 Other Federal Agency Regulations and Policies

General Services Administration	
41 CFR, Management of Federal Facilities	
Department of Transportation	
49 CFR Parts 171-179, Hazardous Materials Handling and Transport Requirements	
Department of Health and Human Services (DHHS)	
Safety Management Manual	
Environmental Management Manual	
National Institutes of Health	
NIH Manual Issuance 3032, *Solid Waste Management*	
NIH Manual 1341, *Protective Clothing and Equipment*	
NIH Manual 1342, *Occupant Evacuation Plan*	
NIH Manual Transmittal 1361, *Corridor Utilization Policy*	
NIH Manual Issuance 1340, *Occupational Safety and Health Management*	
NIH Division of Engineering Services (DES), *Instruction Manual*	
Code 1340-1	DES Safety Program
Code 1340-2	Safety Precautions and Procedures Related to Low Voltage Electrical Circuits
Code 1340-3	Uniforms and Protective Clothing

National Institutes of Health	
Code 1340-4	Safety Footwear Program
Code 1340-5	Safety Precautions and Procedures Relating to Radiation Hazards
Code 1340-6	Policy and Procedures for Working with Asbestos
Code 1340-7	Procedures for Entering Manholes or Other Below Grade Confined Spaces
Code 1340-11	DES Procedures for Handling PCBs
Code 1340-12	Walking and Working Surfaces
NIH Specification Section	"Use, Handling, Storage, Transporting, Accumulation and Disposal of NIH Controlled Material"
NIH Specification Section	"Safety and Health"
NIH Specification Section	"Removal of Asbestos Materials"
NIH Specification Section	"Fume Hood, Laboratory, Air By-Pass Type"

3.A.4 Industry Consensus Standards

National Institute of Occupational Safety and Health (NIOSH), Cincinnati, OH
Guide to Chemical Hazards Handbook
American Conference of Governmental Industrial Hygienists (ACGIH), Lansing, MI
Industrial Ventilation: A Manual of Recommended Practice
Threshold Limit Values for Chemical Substances and Physical Agents and Biological Exposure Indices
American National Standards Institute (ANSI), New York
Fundamentals Governing the Design and Operation of Local Exhaust Systems
Numerous committee papers on materials and systems certifications (see attached cross-reference listing in OSHA publication of OSHA regulatory criteria and their requisite ANSI standards)

American Society of Heating, Refrigerating and Air-Conditioning Engineers (ASHRAE), New York
Standard 62, *Ventilation for Acceptable Indoor Air Quality*
Standard 55, *Thermal Environmental Conditions for Human Occupancy*
ASHRAE Handbook - HVAC Applications
American Society of Testing Materials (ASTM), West Consbohocken, PA
Annual books of ASTM standards, verifying minimum quality standards for various construction materials and products
National Sanitation Foundation
NSF 49-1992, Class II (Laminary Flow) Biohazard Cabinetry
Building Officials and Code Administrators International, Inc. (BOCA), Country Club Hills, IL
International Mechanical Code
General Reference Publications
Patty's Industrial Hygiene and Toxicology, Volume I, Wiley-Interscience, New York
The Industrial Environment: Its Evaluation and Control, GPO, DHHS, NIOSH, Washington, DC

3.B Biosafety Regulations

The latest edition/revision of all references cited (Regulations, Executive Orders, Standards, Manual Issuances, and Guidelines) shall be used.

3.B.1 Federal Regulations

- U.S. Department of Labor, OSHA, Occupational Exposure to Bloodborne Pathogens, 29 CFR 1910.1030
- U.S. Department of Labor, OSHA, Enforcement Policy and Procedures for Occupational Exposure to Tuberculosis
- U.S. Department of Labor, OSHA, Specifications for Accident Prevention Signs and Tags, 29 CFR 1910.145

3.B.2 State Regulations

- State of Maryland, Department of Environment (MDE), Title 26, Subtitle 13: Disposal of Controlled Hazardous Substances, Chapter 11, Special Medical Wastes
- Refer to local requirements for the disposal of controlled hazardous substances and/or medical pathological waste.

3.B.3 Industry Standards

American Conference of Governmental Industrial Hygienists
Industrial Ventilation: A Manual of Recommended Practices, Cincinnati, OH
National Sanitation Foundation
NSF 49-1992, Class II (Laminar Flow) Biohazard Cabinetry
American Society of Heating, Refrigerating and Air-Conditioning Engineers (ASHRAE)
Chapter 7, Health Care Facilities, in *Applications Handbook*, Atlanta, GA
Chapter 16, Air Flow Around Buildings: in *Fundamentals Handbook*, Atlanta, GA

U.S. Department of Health and Human Services (DHHS), Public Health Service, CDC/NIH
Biosafety in Microbiological and Biomedical Laboratories, DHHS Pub. No. (CDC) 93-8395
Guide for the Care and Use of Laboratory Animals, DHHS Publication No. (NIH) 85-23
DHHS, NIH*: Chemical Hygiene Plan*
DHHS, NIH, *Guidelines for Research Involving Recombinant DNA Molecules*, 66 FR 1146
Proceedings of the National Cancer Institute Symposium on Design of Biomedical Research Facilities, Cancer Research Safety Monograph Series, Volume 5, NIH Pub. No. 81-2305

3.C Radiation Safety Regulations

The latest edition/revision of all references cited (Regulations, Executive Orders, Standards, Manual Issuances, and Guidelines) shall be used.

3.C.1 Federal Regulations, Executive Orders, and Regulatory Compliance Requirements

Environmental Protection Agency (EPA)
Presidential Documents, Federal Register, Volume 52, No. 15, Tuesday, January 27, 1987, "Radiation Protection Guidance to Federal Agencies for Occupational Exposure; Approval of Environmental Protection Agency Recommendations"
EPA Standards for Airborne Emission of Radionuclides, 40 CFR Part 61 (National Emission Standards for Hazardous Air Pollutants, 40 CFR Part 61)
EPA, National Emission Standards for Hazardous Air Pollutants (NESHAPs), 40 CFR, Part 61, Subpart I
Occupational Safety and Health Administration (OSHA)
Ionizing Radiation, Section 1910.96
Memorandum of Understanding Between OSHA and the NRC, dated December 23, 1989
U.S. Nuclear Regulatory Commission (NRC)
NRC, 10 CFR Part 19, Notices, Instructions, and Reports to Workers, Inspections
NRC, 10 CFR Part 20 et al., Standards for Protection Against Radiation, Final Rule
NRC, 10 CFR Part 30, Rules of General Applicability to Domestic Licensing of Byproduct Material
NRC, 10 CFR Part 3, Specific Domestic Licenses of Broad Scope for Byproduct Material
NRC, 10 CFR Part 35, Medical Use of Byproduct Material
NRC, 10 CFR Part 71, Packaging and Transportation of Radioactive Materials
NRC Information Notice No. 90-09, *Extended Interim Storage of Low-Level Radioactive Waste by Fuel Cycle and Materials Licensees,* February 5, 1990
NRC Regulatory Guide 8.25, *Air Sampling in the Workplace*
NRC NUREG 1400, *Air Sampling in the Workplace*
NRC Report, NUREG 1516, Volume 9, *Consolidated Guidance About Materials Licenses, Program-Specific Guidance About Medical Use Licenses*

U.S. Food and Drug Administration (FDA)
FDA, 21 CFR 1000, Subchapter J, Radiological Health, through 1040.11
FDA, Title 21, Part 892, Radiology Devices, Subpart B, Diagnostic Devices, 892.1000, Magnetic Resonance Imaging
FDA Title 21, Part 1040, Performance Standards for Light-Emitting Products
American National Standards Institute (ANSI)
For radioactive airborne effluent monitoring systems: Guide to Sampling Airborne Radioactive Materials in Nuclear Facilities, ANSI Standard N13.1
Specification and Performance of On-Site Instrumentation for Continuous Monitoring of Radioactive Effluents, ANSI Standard N 42.18
Testing of Nuclear Air-Cleaning Systems, ANSI/ASME Standard N510
American National Standard for the Use of Lasers, ANSI Standard 2136.1
State and Local Requirements
For radioactive materials and radiation-producing equipment, the NIH is subject to Federal requirements and regulations. State and local regulations generally do not apply.

3.C.2 Radiation Safety Regulatory Compliance Documentation

All NIH design and construction projects shall be in compliance with the following Federal regulations.

- The materials license that is issued by the NRC. Compliance with, and conditions of, the license are regulated by the NRC, consistent with the latest revisions of 10 CFR Part 20, 10 CFR Part 30.
- EPA regulations on NESHAPs, 40 CFR 61 Subpart I
- OSHA Ionizing Radiation Regulations 1910.96 and current Memorandum of Understanding Between the OSHA and the NRC, December 23, 1989 (Enclosures B and C)
- U.S. Food and Drug Administration, 21 CFR 1000, Subchapter J, Radiological Health, through 1040.11
- The appropriate and current NIH Policy and Procedures Manuals

3.C.2.1 Voluntary Guidelines, Recommendations, and/or Standards:

- American National Standards Institute
- American Association of Physicists in Medicine
- Conference of Radiation Central Program Directors, Inc.
- Health Physics Society
- Society of Nuclear Medicine
- International Commission on Radiological Protection
- National Council on Radiation Protection and Measurements

3.C.3 Regulatory Compliance Issues

- NRC regulations and license conditions for air emissions. The materials license is issued by the NRC. Compliance with, and conditions of, the license are regulated by the NRC.
- Design requirements shall reflect the current Federal regulatory compliance standards.
- The latest guidance may be followed if it does not conflict with current Federal regulatory requirements.

Appendix 4
Links to References on the World Wide Web

Where abbreviations and acronyms are used in the NIH Design Policy and Guidelines, they shall mean the recognized name of the entities in the following list. This list is not meant to be all-inclusive. Names and Web site addresses are subject to change and are believed to be accurate and up to date as of the date of this release of the NIH Design Policy and Guidelines.

4.1 Abbreviations for Standards and Regulations

Abbreviation	Title of Standard or Regulatory Organization and Web Site
ADAAG	Americans with Disabilities Act Accessibility Guidelines Available from the U.S. Access Board www.access-board.gov
CFR	Code of Federal Regulations Available from the Government Printing Office www.access.gpo.gov/nara/cfr/index.html
UFAS	Uniform Federal Accessibility Standards Available from the U.S. Access Board www.access-board.gov
BMBL	CDC/NIH *Biosafety in Microbiological and Biomedical Laboratories* Available in hard copy from the U.S. Government Printing Office or online from the Centers for Disease Control and Prevention www.cdc.gov/od/ohs/biosfty/bmbl4/bmbl4toc.htm
Guide	Guide for the Care and Use of Laboratory Animals Available from the National Academies Press www.nap.edu/catalog/5140.html

4.2 Abbreviations for Industry Associations

Abbreviation	Title of Organization or Industry Association and Web Site
AA	Aluminum Association, Inc. (The) http://www.aluminum.org/
AABC	Associated Air Balance Council http://www.aabchq.com/
AAMA	American Architectural Manufacturers Association http://www.aamanet.org/
ACGIH	American Conference of Governmental Industrial Hygienists www.acgih.org
ACI	American Concrete Institute/ACI International http://www.aci-int.org/
ACPA	American Concrete Pipe Association http://www.concrete-pipe.org/
AEIC	Association of Edison Illuminating Companies, Inc. (The) http://www.aeic.org/
AFPA	American Forest & Paper Association (See AF&PA.)
AF&PA	American Forest & Paper Association http://www.afandpa.org/
AGA	American Gas Association http://www.aga.org/
AHA	American Hospital Association http://www.aha.org/
AIA	American Institute of Architects (The) www.aia.org
AISC	American Institute of Steel Construction www.aisc.org
AITC	American Institute of Timber Construction www.aitc-glulam.org
AMCA	Air Movement and Control Association International, Inc. www.amca.org
ANSI	American National Standards Institute www.ansi.org

Abbreviation	Title of Organization or Industry Association and Web Site
APA	Architectural Precast Association www.archprecast.org
API	American Petroleum Institute www.api.org
ARI	Air-Conditioning & Refrigeration Institute www.ari.org
ASCE	American Society of Civil Engineers www.asce.org
ASHE	American Society of Healthcare Engineering www.ashe.org
ASHRAE	American Society of Heating, Refrigerating and Air-Conditioning Engineers www.ashrae.org
ASME	ASME International (The American Society of Mechanical Engineers International) www.asme.org
ASPE	American Society of Plumbing Engineers www.aspe.org
ASSE	American Society of Sanitary Engineering www.asse-plumbing.org
ASTM	ASTM International (American Society for Testing and Materials International) www.astm.org
AWI	Architectural Woodwork Institute www.awinet.org
AWS	American Welding Society www.aws.org
AWWA	American Water Works Association www.awwa.org
BIA	Brick Industry Association (The) www.bia.org
BSI	Building Stone Institute www.buildingstone.org
CBMA	Certified Ballast Manufacturers Association www.certbal.org
CRSI	Concrete Reinforcing Steel Institute www.crsi.org

Abbreviation	Title of Organization or Industry Association and Web Site
EIA	Electronic Industries Alliance www.eia.org
FM	Factory Mutual System (See FMG.)
FMG	FM Global (Formerly: FM - Factory Mutual System) www.fmglobal.com
ICEA	Insulated Cable Engineers Association, Inc. www.icea.net
IEC	International Electrotechnical Commission www.iec.ch
IEEE	Institute of Electrical and Electronics Engineers, Inc. (The) www.ieee.org
IESNA	Illuminating Engineering Society of North America www.iesna.org
ILI	Indiana Limestone Institute of America, Inc. www.iliai.com
ISEA	International Safety Equipment Association www.safetyequipment.org
LEED	Leadership in Energy and Environmental Design Available from the US Green Building Council http://www.usgbc.org/
LPI	Lightning Protection Institute www.lightning.org
MIA	Marble Institute of America www.marble-institute.com
NAAMM	National Association of Architectural Metal Manufacturers www.naamm.org
NBBI	National Board of Boiler and Pressure Vessel Inspectors www.nationalboard.org
NBGQA	National Building Granite Quarries Association, Inc. www.nbgqa.com
NCMA	National Concrete Masonry Association www.ncma.org
NCPI	National Clay Pipe Institute www.ncpi.org

Abbreviation	Title of Organization or Industry Association and Web Site
NCTA	National Cable & Telecommunications Association www.ncta.com
NEBB	National Environmental Balancing Bureau www.nebb.org
NECA	National Electrical Contractors Association www.necanet.org
NEMA	National Electrical Manufacturers Association www.nema.org
NETA	InterNational Electrical Testing Association www.netaworld.org
NFPA	National Fire Protection Association www.nfpa.org
NFRC	National Fenestration Rating Council www.nfrc.org
NPCA	National Precast Concrete Association www.precast.org
NRCA	National Roofing Contractors Association www.nrca.net
NSF	NSF International (National Sanitation Foundation International) www.nsf.org
PCA	Portland Cement Association www.portcement.org
PCI	Precast/Prestressed Concrete Institute www.pci.org
PDI	Plumbing & Drainage Institute www.pdionline.org
SEFA	Scientific Equipment and Furniture Association www.sefalabfurn.com
SMACNA	Sheet Metal and Air Conditioning Contractors' National Association www.smacna.org
SWI	Steel Window Institute www.steelwindows.com
TIA/EIA	Telecommunications Industry Association/Electronic Industries Alliance www.tiaonline.org

Abbreviation	Title of Organization or Industry Association and Web Site
UL	Underwriters Laboratories Inc. www.ul.com
WWPA	Western Wood Products Association www.wwpa.org

4.3 Abbreviations for Code Agencies

Abbreviation	Title of Code Organization and Web Site
BOCA	BOCA International, Inc. www.bocai.org
ICBO	International Conference of Building Officials www.icbo.org
ICC	International Code Council, Inc. (Formerly: CABO - Council of American Building Officials) www.intlcode.org

4.4 Federal, State, and Local Agencies

Abbreviation	Title of Federal Agency and Web Site
EPA	Environmental Protection Agency www.epa.gov
FCC	Federal Communications Commission www.fcc.gov
FDA	Food and Drug Administration www.fda.gov
GSA	General Services Administration www.gsa.gov
HHS	Department of Health and Human Services www.dhhs.gov
MCDOT	Montgomery County, MD, Department of Transportation Standard Details for Roadways www.montgomerycountymd.gov/mc/services/permiting
MDE	Maryland Department of the Environment http://mde.state.md.us

Abbreviation	Title of Federal Agency and Web Site
MDOT	Maryland Department of Transportation State Highway Administrator Standard Details for Installation of Storm Drains www.sha.state.md.us/dm_s_p.htm
NIBS	National Institute of Building Sciences www.nibs.org
NIST	National Institute of Standards and Technology www.nist.gov
OSHA	Occupational Safety and Health Administration www.osha.gov
PBS	Public Building Service (See GSA.)
PEPCO	Potomac Electric Power Company www.pepco.com
USPS	Postal Service www.usps.com
WSSC	Washington Suburban Sanitary Commission http://www.wssc.dst.md.us/index.cfm

4.5 Miscellaneous Publications and References

Title of Publications, References, and Web Site
Air Force Handbook (I) 32-1163; *Engineering Weather Data* www.afcesa.af.mil/Directorate/CES/Mechanical/Energy/Weather%20Handbook/AFH(I)%2032-1163Draft.pdf
Building Code Requirements for Reinforced Concrete www.concrete.org/bookstore/bkstr.htm
Center for Universal Design www.design.ncsu.edu/cud/
College of American Pathologists www.cap.org
Energy Star Products www.energystar.gov

Title of Publications, References, and Web Site
Minimum Design Loads for Buildings and Other Structures - ASCE 7 www.pubs.asce.org
Whole Building Design Guide www.wbdg.org

Appendix 5
Forms and Checklists

5.A Architect-Engineer (A/E) Checklist of Services

The following architectural and engineering checklist of services defines the requirements that may be required for projects at the NIH. It is meant as a guide for obtaining uniformity and coherence in the presentation of design documents. Each project officer will determine the scope of requirements that is needed based on the size and complexity of the project.

These checklists were based on existing documents from:

- The AIA Document B163 Scope of Designated Services
- The NIH/DES Statement of Work
- The NIH Special Provisions for an Indefinite Quantity A/E contract
- The NIH Statement of Work for Building 50
- The Cannon A/E checklist of services and Quality Control System.

The checklist shall be used in conjunction with the contract Statement of Work (SOW) to determine the final scope of services and deliverables.

The checklist includes:

- Project Administration and Management Services
- Predesign Services
- Schematic Design Phase Submission 15%
- Design Development Phase Submission 35%
- Construction Document Phase Submission 70%
- Construction Document Phase Submission 95%
- Construction Document Phase Final Submission 100%

5.A.1 Project Administration and Management Services

5.A.1.1 Project Administration

- Descriptive criteria
- Reading from contracting
- Research
- Consultation
- Conferences
- Communications
- Travel time
- Direction of in-house architectural personnel
- Coordination of work by the NIH
- Progress reports

5.A.1.2 Coordination/Checking

- Coordination between the architectural work and the work of engineering and other disciplines involved in the project
- Reviewing and checking documents prepared for the project by the architect and the architect's consultants

5.A.1.3 Agency Consulting/Review/Approval

- The services below apply to applicable laws, statutes, regulations, and codes of regulating entities and to reviews required of user or community groups with limited or no statutory authority but significant influence on approving agencies and individuals, including:
  - Agency consultations
  - Research of critical applicable regulations
  - Research of community attitudes
  - Preparation of written and graphic explanatory materials
  - Appearances on NIH's behalf at agency and community meetings
- Organizations
  - State agencies
  - Planning boards
  - County agencies
  - Regional agencies
  - Federal agencies
  - NIH organizations, Institutes, Centers, Divisions
  - Community organizations

- Consumer interest organizations
- Environmental interest groups

5.A.1.4 Owner-Supplied Data

- Assistance in establishing criteria
- Assistance in obtaining data, including, where applicable, documentation of existing conditions
- Review and coordination of data furnished for the project as a responsibility of the owner

5.A.1.5 Schedule and Monitoring

- Establish initial schedule for architect's services, decision-making, design, documentation, contracting and construction, based on determination of scope of architect's services.
- Develop schedule for owner review, comment, and time to incorporate those items into the documents at each phase.
- Review and update previously established schedules during subsequent phases.

5.A.1.6 Preliminary Cost Estimate

- Prepare a preliminary estimate of the cost of construction as well as architectural and engineering services.
- Review and update the preliminary estimate of the cost of construction and architectural and engineering services during subsequent phases.

5.A.1.7 Presentation

- Users
- Building committee(s)
- Staff committee(s)
- NIH organizations, Institutes, Centers, Divisions
- User group(s)
- Board(s) of Directors
- Financing entity (entities)
- NIH's consultants

5.A.2 Predesign Services

5.A.2.1 Programming

- Design objectives' limitations and criteria.
- Verify Program of Requirements (POR) if applicable.
- Confirm with Master Plan.
- Develop initial approximate gross facility areas and space requirements.
- Determine space relations.
- Determine number of functional responsibilities personnel.
- Allow for flexibility and expandability.
- Allow for special equipment and systems.
- Determine site requirements.
- Determine fire protection requirements.
- Develop a preliminary budget of the work based on programming and scheduling studies.
- Determine operating procedures - materials handling.
- Determine security criteria.
- Determine communications relationship.
- Determine project schedule.

5.A.2.2 Space Schematics/Flow Diagrams

- Conversion of programmed requirements to net area requirements
- Internal functions
- Human, vehicular, and material flow patterns
- General space allocations
- Analysis of operating functions
- Adjacency
- Special facilities and equipment
- Flexibility and expandability

5.A.2.3 Existing Facilities Surveys

- Verify basis of design.
- Identify deficiencies of existing facility.
- Perform space utilization of existing facility.
- Take photographs.
- Take field measurements.
- Review existing design data.
- Analyze existing structural capabilities.
- Analyze existing mechanical capabilities.

- Analyze existing electrical capabilities.
- Review existing drawings for critical inaccuracies and develop required measured drawings.

5.A.2.4 Economic Feasibility Studies

- Define total project cost

5.A.2.5 Detailed Site Utilization Studies

- Land utilization
- Structures placement
- Facilities development
- Development phasing marshalling plan (construction staging, office parking, storage, etc.)
- Movement systems, circulation, and parking
- Utilities systems
- Surface and subsurface conditions "topography"
- Review of soils report
- Vegetation
- Slope analysis
- Sediment control and grading plan
- Ecological studies
- "Master plan," zoning, and other legal restrictions
- Landscape forms and materials

5.A.2.6 Onsite Utility Studies

- Electrical service and distribution
- Gas service and distribution
- Water supply and distribution
- Site drainage
- Wind analysis
- Sanitary sewer collection and disposal
- Process wastewater treatment
- Stormwater collection and disposal
- Central-plant mechanical systems
- Fire systems and water flow test
- Emergency systems
- Security
- Pollution control

- Site illumination
- Communications system

5.A.2.7 Offsite Utility Studies

- Confirmation of location, size, and adequacy of utilities serving the site
- Determination of requirements for connections to utilities
- Planning and design for offsite utility extensions and facilities

5.A.2.8 Environmental Studies and Reports

- Coordinate environmental review (NEPA) requirements with Division of Environmental Protection (DEP).
- Ecological studies
- Attendance at public meetings and hearings
- Presentations to governing authorities
- Coordination of all reports with Office of Community Liaison (OCL)

5.A.2.9 Zoning Processing Assistance

- Assistance in preparing application
- Development of supporting data
- Preparation of presentation materials
- Attendance at public meetings and hearings

5.A.2.10 Geotechnical Engineering

- Establish geotechnical conditions
  - Test borings
  - Test pits
  - Soil-bearing value
  - Percolation test
  - Ground corrosion and resistivity tests
  - Evaluation of subsurface material and conditions
  - Evaluation of necessary operations for anticipated subsoil conditions
  - Reports and professional recommendations

5.A.2.11 Site Surveying

- Survey by licensed surveyor
  - Description of physical characteristics
  - Legal limitations
  - Utility locations
  - Written legal description

- Grades
- Lines of streets, alleys, and pavements
- Adjoining property and structures
- Adjacent drainage
- Right of ways
- Restricting easements

- Site survey
  - Encroachments
  - Zoning
  - Deed restriction
  - Boundaries
  - Contours
  - Existing building information
  - Trees
  - Public utilities/above and below grade
  - Private utilities/above and below grade
  - Inverts and depths
  - Reference to a project benchmark

5.A.3 Schematic Design Phase Submission 15%

5.A.3.1 Site/Landscape

- All site documentation will:
  - Be coordinated with similar activities in other disciplines
  - Address all remarks from predesign phase

5.A.3.1.a Plans

- Existing site plan
  - Major landscaping
    - Major trees and vegetation
    - Outcroppings
    - Bodies of water
    - Fences and barriers
  - Site features and conditions
    - Existing contours
    - Flood zones or hazards
    - Property lines
    - Layout leases or easements

- Zoning setbacks
- Subsoil characteristics
- Seismic conditions
- Identifiable site constraints
- Utility lines
- Security features
- Manholes, drains, utility access
- Location of preliminary soil boring
- Historic or archaeological impact

- Paved surfaces
  - Major streets
  - Vehicular routes
  - Curbs
  - Walks
  - Pedestrian access routes
  - Bicycle paths and parking
  - Parking with handicapped locations
  - Service areas
  - Other paved areas
- Structures
- Existing buildings with roof plans
  - Adjacent buildings with roof plans
  - Outbuilding or sheds
  - Canopies
- Other elements
  - Nuisance land uses
  - Special equipment (MRI, laser, etc.)
  - Convenience nodes (mass transit, dropoff area)
  - Facilities that may have interruption of any utility
- Proposed contours
- Construction marshalling information
  - Staging areas
  - Construction office trailer locations
  - Utility hookups, construction trailer
- Indications of phasing
- Limits of work
- Indication of future surrounding improvements

- Demolition plan
- Alternate schemes (indicate number)

5.A.3.1.b Reports

- Basis for Design report
  - Utilities statement: companies, agencies, individual contacts
    - Electrical power
    - Mechanical
    - Site utilities
    - Fire protection
  - Analysis/description of conceptual design solutions
    - Design objectives
    - Environmental determinants
    - Site utilities
    - Land forms
    - Site lighting
    - Pest management
    - Irrigation system
    - Lawns and plantings based on programming
    - Grading
    - Physical site characteristics
    - Impact of building on site
    - Impact of site on building
  - Site safety plan
    - Fire protection
    - Hazardous material handling
  - Concept plan for drainage and grading
  - Demolition requirements
    - Pest management
  - Alternative materials, systems, and equipment
    - Site utilities
    - Fire protection
    - Paving
    - Other

5.A.3.2 Architectural

- All architectural documentation will:
  - Be coordinated with similar activities in other disciplines
  - Address all remarks from predesign phase

5.A.3.2.a Plans

- Conceptual design plan
- Floor plan of each level
  - Area names
  - Capacity information (number of beds, seating, etc.)
  - Departmental assignments
  - Floor elevations
  - Lightwells
  - Mechanical areas
  - Multilevel spaces
  - Partition locations
  - Planning grid
  - Preliminary equipment and description
  - Public areas
  - Relative wall thickness
  - Room names
  - Security features
  - Service areas
  - Skylights
  - Vertical transportation
- Fire protection and egress plan
  - List features required by BOCA
  - List features required by NFPA Standard 101
  - Fire protection analysis
  - Fire areas
  - Fire walls
  - Smoke zones
  - Travel distances
  - Areas of refuge
- Proposed lab module plan
  - Basic layout
  - Relation to structure

5.A.3.2.b Interiors

- Interior space allocation and utilization plan
  - Preliminary furniture and equipment
  - Indicate major materials and systems
  - Outline of finishes

5.A.3.2.c Exterior

- Building exterior elevations
  - Indicate surface materials for all areas
  - Finish grades
  - Major floor elevations above and below grade
  - Significant site features (plantings, water, hills, berms, etc.)
  - Exposed mechanical and electrical equipment
  - Sketch elevations or perspectives of buildings
  - Description of various design features

5.A.3.2.d Sections

- Building section
  - Relative thickness of floors
  - Relative thickness of walls
  - Major floor elevations
  - Finish grades
  - Major room names
  - Important site easements
  - Significant mechanical and electrical equipment
  - Relationship to site contours
  - Above-ceiling zoning analysis

5.A.3.2.e Reports

- Basis for Design report
- Architectural program
- Area analysis
  - Gross area tabulations
  - Area tabulations for net and gross design areas by floor
  - Space tabulation of net and gross by room
  - Review and verify area calculation guideline functions
  - Comparison of areas and POR
- Outline specification
- Alternative materials, systems, and equipment

5.A.3.3 Structural

- All structural documentation will:
  - Be coordinated with similar activities in other disciplines
  - Address all remarks from predesign phase
- Conceptual design
  - Overall structural
  - Foundation design
  - Systems outlines

5.A.3.3.a Plans

- Structural schematic floor plans
  - Indicate major bracing locations
  - Locate typical bay
  - Indicate structural framing systems
- Development of alternatives

5.A.3.3.b Reports

- Basis for Design report
  - Existing conditions
    - Structural systems
    - Underlying soil-bearing capacities
    - Seismic design criteria
  - Windloading
  - Vibration requirements and analysis
  - Summary of structural systems requirements
    - Fire-resistive construction requirements
  - Analysis for materials and systems
  - Development of conceptual design solutions

5.A.3.4 Mechanical

- All mechanical documentation will:
  - Be coordinated with similar activities in other disciplines
  - Address all remarks from predesign phase

5.A.3.4.a HVAC Plans

- Locate existing mechanical HVAC equipment
- Lay out major components
- Verify locations of mechanical rooms with architectural plans

- Verify locations of vertical shafts with architectural plans
- Identify connections to major utilities
  - Steam
  - Chilled water
  - Natural gas
- Indicate existing intakes and exhausts relationships to:
  - loading docks
  - kitchen
  - emergency generator
  - other

5.A.3.4.b Reports

- Basis for Design report
  - Present conditions
  - Design conditions
    - Outside air temperature
    - Inside air temperature
    - Air changes
    - Relative humidity
    - Utility pressure
    - Methodology for utility demands
  - Requirements for HVAC services
  - Special requirements
    - Fume hood
    - Biosafety cabinet
    - Other local exhaust requirements
    - Constant-temperature rooms
    - Clean rooms
  - Overall HVAC system concepts
  - Energy recovery systems
  - Preliminary energy budget
  - Life-cycle cost analysis
  - Analysis of conceptual design solutions
    - Energy source
    - Energy conservation
    - Heating and ventilating
    - Air conditioning
  - Alternative materials, systems, and equipment

5.A.3.5 Plumbing

5.A.3.5.a Plans

- Locate existing plumbing equipment
- Lay out major components
- Verify locations of vertical shafts with architectural plans
- Identify connections to major utilities
  - Steam
  - Chilled water
  - Natural gas
  - Water
  - Special water (deionized)
  - Sewer
  - Specialty gases (systems or tanks)
  - Vacuum
  - Compressed air

5.A.3.5.b Reports

- Basis for Design report
  - Present conditions
  - Requirements for plumbing services
  - Special requirements
    - Radioactive waste
    - Waste recovery
  - Overall plumbing system concepts
  - Analysis of conceptual design solutions
  - Alternative materials, systems, and equipment

5.A.3.6 Fire Protection

5.A.3.6.a Plans

- Locate existing fire protection equipment or systems
- Lay out major components

5.A.3.6.b Reports

- Basis for Design report
  - Present conditions
  - Requirements for fire protection
  - Overall system concepts

- Analysis of conceptual design solutions
- Alternative materials, systems, and equipment
- Calculation of the existing water supply
- Calculation of the required water supply
- Hydrostatic flow test
- Preliminary sprinkler water supply calculations
- Schematic plans with overall fire protection concepts
- Special fire suppression systems
  - Descriptions
  - Locations
  - Justification for use

- Integrated fire alarm and security system
- Alternative materials, systems, and equipment
- Protection analysis report for each alternative

5.A.3.7 Electrical and Communications

- All electrical documentation will:
  - Be coordinated with other disciplines
  - Address all remarks from predesign phase

5.A.3.7.a Plans

- Locate existing connections to:
  - Power
    - Primary voltage
    - Primary voltage transformation
    - Secondary distribution
    - Illumination
    - Emergency and UPS systems
    - Special grounding
  - Communications
    - Shielding
    - Internal communication systems
    - Telephone system
    - Data and LAN systems
    - Television system
  - Safety
    - Fire detection systems
    - Security systems

        - Equipment and alarm systems
    - Other
        - Regulated clock systems
        - Special electrical systems
- Layout of major components of existing system
    - Power
    - Communications
    - Safety
    - Other
- Layout of major components for proposed systems
    - Power
    - Communications
    - Safety
    - Other
- Single line indication of major feeder routes
- Indicate general space requirements
- Verify locations of electrical rooms with architectural plans
- Verify locations of vertical shafts with architectural plans

5.A.3.7.b Reports

- Basis for Design report
- Calculations of existing size and available capacity
    - Power
        - Primary voltage
        - Primary voltage transformation
        - Secondary distribution
        - Illumination
        - Emergency and UPS systems
        - Special grounding
    - Communications
        - Shielding
        - Internal communication systems
        - Telephone system
        - Data and LAN systems
        - Television system
    - Safety
        - Fire detection systems
        - Security systems

        - Equipment and alarm systems
    - Other
        - Regulated clock systems
        - Special electric systems
- Existing conditions and systems
- Electrical plant analysis
- Description of primary service available
- Overall electrical system concept
- Analysis of conceptual design solutions
- Systems outline proposed
- Life safety equipment load
- Description of emergency power system
- Energy budget
    - Proposed annual usage
    - Maximum design loads
    - Test for compliance with all applicable energy codes

5.A.3.8 Summary

- All reports and documentation will:
    - Be coordinated with similar activities in each discipline
    - Address all remarks from predesign phase

5.A.3.8.a Code

- Code analysis
    - Define building type
    - Define use category

5.A.3.8.b Costs

- Cost analysis
    - Preliminary cost base on a systems cost estimate
    - Preliminary cost based on general square meter cost
    - Cost estimates based on engineering systems
    - Preliminary cost comparison for each alternative

5.A.3.8.c Review

- Review NIH Guidelines and POR for compliance
- Respond in writing to all Predesign comments
- Submit all documents for review

- Attend review meetings as necessary to answer questions
- Ensure compliance with environmental review (NEPA) Requirements

5.A.4 Design Development Phase Submission 35%

5.A.4.1 Site/Landscape

- All Site documentation will:
  - Be a minimum of 35% complete
  - Be coordinated with similar activities in other disciplines
  - Address all remarks from Schematic Design 15% phase

5.A.4.1.a Plans

- Vicinity Plan
- Existing Site Plan
  - Major landscaping
  - Site features and conditions
  - Paved surfaces
  - Structures
  - Other elements
- Proposed site plan
  - Existing site information
  - Building footprint
    - Spot elevations
  - Key design elements
  - Major landscaping
  - Utility lines
  - Concept plan for drainage and grading
  - Vehicular access routes
  - Pedestrian access routes
  - Parking
    - Handicapped
    - Motorcycle
    - Bicycle
    - Striping
    - Overall dimensions
  - Walks
    - Overall dimensions

- Curbs
  - Curb cuts
  - Dimensions
- Service areas
- Proposed contours
- Construction marshalling information
  - Location for excavated material
  - Site access routes
- Indications of phasing
- Limits of work
- Indication of future surrounding improvements
- Indication of artwork
- Location of signage
- Security measures
  - Closed-circuit TV
  - Gates and booths

- Preliminary landscape details
- Demolition plan
  - Erosion control measures
  - Preliminary demolition and removal
- Alternate schemes

5.A.4.1.b Reports

- Basis for Design report
  - Establishment final scope
    - Relationships
    - Form
    - Size
    - Appearance
  - Utilities statement: companies, agencies, individual contacts
  - Analysis/description of conceptual design solutions
  - Site safety plan
  - Stormwater management report
  - Erosion/sediment control report
  - Concept plan for drainage and grading
  - Demolition requirements
  - Alternative materials, systems, and equipment
- Development of outline specification and material list

5.A.4.2 Architectural

- All architectural documentation will:
  - Be a minimum of 35% complete
  - Be coordinated with similar activities in other disciplines
  - Address all remarks from Schematic Design 15% phase

5.A.4.2.a Plans

- Floor plans of each level
  - Identification of existing and new construction
  - Double line plans with precise wall thickness
  - All programmed rooms
  - Equipment rooms
  - Signal rooms
  - Electrical rooms
  - Telephone closets
  - Mechanical rooms
  - Shafts
  - Circulation corridors
  - Stairs
  - Ladders
  - Elevators
    - Number
    - Type
    - Size
  - Automatic conveyances
  - Room names
  - Department or area names
  - Planning grid
  - Structural grid
  - Floor elevations
  - Equipment
  - Furnishings and other space-defining elements
  - Multilevel spaces
  - Skylights
  - Lightwells
  - Significant mechanical equipment
  - Significant electrical equipment
  - Capacity information (number of beds, seating, etc.)

- Overall dimensions
- Plan and layout of typical or repetitive spaces
- Fire protection
  - Fire walls
  - Smoke walls
  - Smoke zones
- Roof plan
  - Major roof elements
    - Skylights
    - Hatches
    - Major mechanical equipment
    - Major electrical equipment
    - Elevator machine rooms
- Reflected ceiling plan
  - Areas of special interest
  - Major components
- Fire protection egress plan
- Proposed lab module

5.A.4.2.b Interiors

- Interior space allocation and utilization plan
  - Establish the final scope relative to interior construction
    - Special interior design features
    - Furniture
    - Furnishings
    - Equipment selections
    - Materials
    - Finishes
    - Colors
    - Artwork

5.A.4.2.c Exterior Elevations

- Building exterior elevations
  - Indicate all surface materials for all areas
  - Significant site features
    - Major planting
    - Bodies of water
    - Hills, earth berms

5.A.4.2.d Interior Elevations

- Building interior elevations
  - Typical spaces
  - Major spaces
  - Areas of special interest
  - Areas of special complexity

5.A.4.2.e Sections and Details

- Building sections
  - Set floor-to-floor dimensions
  - Establish floor elevations
  - Set interstitial space dimensions
- Construction details
  - Typical wall sections
    - At window
    - At solid wall
    - At parapets and roofs
    - At finished grades and footings
- Construction sections
  - Typical stairways
  - Typical elevator shaft and machine room
  - Utility coordination cross-sections

5.A.4.2.f Reports

- Basis for Design report
- Area analysis
- Outline specification
  - Materials lists
- Alternative materials, systems, and equipment

5.A.4.3 Structural

- All reports and other documentation will:
  - Be a minimum of 70% complete
  - Be coordinated with similar activities in each discipline
  - Address all remarks from the Schematic Design 15% phase

5.A.4.3.a Plans

- Conceptual design
- Structural floor plans, each level
  - Fixed column reference lines
  - Basic structural system and dimensions
  - Bearing walls
  - Major bracing locations
  - Indicate typical bay
  - Preliminary sizing of major components
  - Columns
  - All framing members identified
    - Girders
    - Beams
    - Joists
  - Indicate structural framing systems
- Structural foundation plans
  - Footings
  - Foundation walls
  - Grade beams
- Details
  - Foundation details
  - Typical framing details
  - Subdrainage
  - Waterproofing
  - Dampproofing

5.A.4.3.b Reports

- Basis for Design report
- Development of alternatives
  - Foundation design criteria
  - Coordination with piping systems that require support
  - Laboratory vibration analysis
  - Final structural design criteria
  - Comparative cost analysis of at least two structural systems
- Critical coordination clearances
- Outline specifications or materials list
- Column schedules

5.A.4.4 Mechanical

- All Mechanical documentation will:
  - Be a minimum of 35% completed
  - Be coordinated with similar activities in other disciplines
  - Address all remarks from Schematic Design 15% phase

5.A.4.4.a Plans

- Conceptual design
- Mechanical plan drawings
  - Block layouts of mechanical spaces
  - Indicate existing equipment
  - Layout of major components in equipment rooms
  - Approximate equipment sizes and capacities
  - Required space for equipment
  - Required chases and clearances
  - Acoustical and vibration control
  - Visual impacts
  - Single line presentation of ductwork systems
  - Single line HVAC piping mains
  - BAS controls
  - Energy conservation measures
  - Shafts
- Laboratory planning modules
- Development of outline specifications
  - List manufacturers of equipment

5.A.4.4.b Reports

- Basis for Design report
  - Plant analysis
  - Design intent and scope of systems
  - Systems outline for proposed project
    - Heating source
    - Refrigeration source
    - HVAC systems
    - Energy conservation
  - Block load calculations for space cooling and heating
  - Energy analysis for at least three HVAC systems
  - Energy recovery analysis

- Energy conservation analysis
- Connected load requirements
- Wind analysis and laboratory exhaust plume

5.A.4.5 Plumbing

5.A.4.5.a Plans

- Plan drawings
  - Location of existing plumbing equipment
  - Layout of major components
  - Plumbing fixtures
  - Distribution layouts
  - Utilities
  - Piped gas systems
  - Hot water
  - Water softening
  - Plumbing piping mains
  - Drainage piping mains
  - Shafts
  - Plumbing specialties
  - Pipe materials

5.A.4.5.b Reports

- Basis for Design report
- Coordination with structural for support of piping
- Development of outline specifications
  - List manufacturers of equipment
  - Specify manufacturers of equipment

5.A.4.6 Fire Protection

5.A.4.6.a Plans

- Plan drawings
  - Existing systems
  - New fire protection mains
  - Preliminary equipment layouts
  - Required space for equipment
  - Block layouts for fire protection system

5.A.4.6.b Reports

- Basis for Design report
- Development of outline specifications
  - List manufacturers of equipment
  - Approximate sizes and capacities of major components

5.A.4.7 Electrical and Communications

- All Electrical documentation will:
  - Be a minimum of 35% complete
  - Be coordinated with similar activities in other disciplines
  - Address all remarks from Schematic Design 15% phase
- Conceptual design

5.A.4.7.a Plans

- Scaled electrical plans
  - Scaled one-line diagrams of proposed electrical system
    - High-voltage circuitry or transformation required
    - Emergency power
    - Fire alarm
    - Layout of major components in all electrical equipment rooms
    - Preliminary sizes of major components
    - Emergency/UPS
    - High-voltage systems
    - Primary transformers
    - Emergency generator
  - Identify special features
    - Telephone connections
    - Data connections
    - LAN locations and MIS provisions
    - Underfloor raceways
    - Occupancy sensors
    - Power outlets
    - Exit lights
    - Fire alarm
    - Signal system devices
- Tentative layouts of components where space is critical
- Ceiling plans

- Location of lighting fixtures
- Type of lighting fixtures
- Laboratory planning module
- Electrical site plan details
  - Service entrance locations
  - Initial distribution diagram for power
  - Telephone
  - Signal systems
- Preliminary details for site electrical work

5.A.4.7.b Reports

- Basis for Design report
  - Electrical plant analysis
  - Criteria for lighting
  - Criteria for electrical system
  - Criteria for communications systems
  - Building automation concept
  - Systems outline with manufacturers and types of systems
- Establishment of the final scope
- Overall building connected load requirements
- Agreement from each utility company or agency on design development drawings
- Development of outline specifications or materials lists

5.A.4.8 Summary

- All reports and documentation will:
  - Be coordinated with similar activities in each discipline
  - Address all remarks from Schematic Design 15% phase

5.A.4.8.a Code

- Code analysis
  - Outline of design conformance with regulatory agencies
  - Outline of applicable codes
  - Building classification
  - Zoning category
  - Construction type

5.A.4.8.b Reports

- Design reports
  - Basis for design with revisions from schematic phase
  - Outline of program
  - Design description narrative
  - Design concepts and objectives
  - Tabulation of net and gross areas
  - Growth potential
  - Alternate schemes

5.A.4.8.c Energy

- Building envelope analysis
  - Recommendations for overall building envelope
  - Review of thermal vapor flow and moisture
  - Recommendation for vapor barriers
  - Recommendation for vapor isolation
- Energy study
  - Alternate methods of energy conservation
    - Associated advantages
    - Associated disadvantages
    - Payback calculations
    - Utility company rebates
  - Alternate methods of energy recovery
    - Associated advantages
    - Associated disadvantages
    - Payback calculations
    - Utility company rebates
- Asbestos report
- Wind analysis and exhaust plume study
- Vertical transportation recommendations
  - Elevators
    - Number
    - Type
    - Size
    - Weight capacity
    - Speed
    - Arrangement
  - Other requirements

- Fire protection narrative
  - Strategy for meeting life safety codes
  - List any upgrade requirements to achieve fire protection policy

5.A.4.8.d Costs

- Cost analysis
  - Cost estimate
    - Approximate quantities
    - Itemized breakdown
    - Identification of potential items for value engineering
  - Budget outline
    - Construction cost
    - Owner's cost
    - Project cost
    - Total Cost
    - Equipment included in budget
    - Equipment by owner

5.A.4.8.e Specifications

- General and supplemental conditions of contract
- Outline of specifications or itemized list with criteria and quality standards
  - Significant architectural materials
  - Engineering systems
  - Equipment
- Outline of project specifications in marked-up form
- Request for and justification of proprietary items

5.A.4.8.f Schedules

- Construction schedule in bar chart form
- Project schedule diagram with phases of development

5.A.4.8.g Calculations

- Design calculations
  - Structural
    - Preliminary structural calculations
    - Calculations for support of hydronic and hydraulic piping
  - HVAC
    - Indoor design conditions U-valve calculations

        - Outdoor design conditions U-valve calculations
        - Theoretical water vapor migration
        - Dew point and condensation potential
        - Ductwork sizing in plenums and shafts
        - Cooling loads
        - Heating loads
    - Plumbing
        - Plumbing calculations
        - Pump sizing
        - Tank sizing
    - Fire protection
        - Sprinkler calculations
        - Fire alarm requirements
    - Electrical
- Presentation
    - Study sketches
    - Preliminary perspectives
    - Rendered perspective
    - Models
        - Study models
        - CADD models
        - Presentation model at scale

5.A.4.8.h Review

- Ensure compliance with the NIH guidelines
- Review and approve general architectural materials
- Respond in writing to all schematic design materials
- Submit all documents for review
- Attend review meetings as necessary to answer questions

5.A.5 Construction Document Phase Submission 70%

5.A.5.1 Site/Landscape

- All Site documentation will:
    - Be a minimum of 70% complete
    - Be coordinated with similar activities in other disciplines
    - Address all remarks from Design Development 35% phase

5.A.5.1.a Plans

- Vicinity plan
- Existing site plan
- Proposed site plan
  - Existing site information
  - Dimension major site features
  - Building footprint
    - Grade elevations at each building corner
    - Grade elevations at entrances, and critical areas
    - First floor elevations
    - Overall dimensions
  - Key design elements
  - Major landscaping
  - Utility lines
  - Concept plan for drainage and grading
  - Vehicular access routes
    - Profile and alignment of all new roads
  - Pedestrian access routes
  - Parking
    - All striping
    - All unique spaces
    - Dimensions
  - Walks
    - Dimensions
    - Paving joints
  - Curbs
    - Dimensions
  - Service areas
    - Dimensions
  - Staking plan
  - Proposed contours
    - Grading at all altered areas
  - Construction marshalling information
    - Locate and outline
    - Locate temporary utility hookup
  - Indications of phasing
  - Limits of work
  - Indication of future surrounding improvements

- Indication of artwork
- Location of signage
  - Location(s) of construction sign
- Security measures

- Planting plan
  - Location of all trees, shrubs, and lawns
  - Complete planting list
  - Planting details
- Preliminary landscape details
- Demolition plan
- Utility plot plan
  - Existing utilities and their connections
  - Proposed trunk sewers
  - Water distribution loop
  - Gas distribution mains
  - Location arrangement of water treatment equipment
- Alternate schemes

5.A.5.1.b Reports

- Site construction document design report
  - Establishment of final scope
  - Utilities statement: companies, agencies, individual contacts
  - Analysis/description of conceptual design solutions
  - Coordination with NIH Utilities Master Plan
    - Verify location, sizing, and timing of all required interfaces
    - Provide schedule confirmation of any utility work
  - Site safety plan
  - Stormwater management report
  - Erosion/sediment control report
  - Review planting plan against master plan
  - Concept plan for drainage and grading
  - Demolition requirements
  - Alternative materials, systems, and equipment
- Develop specification and material list

5.A.5.2 Architectural

- All Architectural documentation will:
  - Be a minimum of 70% completed

    - Be coordinated with similar activities in other disciplines
    - Address all remarks from Design Development 35% phase
- Entire project site on one sheet for reference
- General notes
- Reference and coordination symbols
    - Enlarged plan bubbles
    - Section indications
    - Exterior elevation keys
    - Interior elevation keys
    - Wall type indications
- All dimensions
    - Overall
    - Column grid
    - Locating dimensions
        - Partitions
        - Openings
        - Equipment

5.A.5.2.a Plans

- Floor plans of each level
    - All room names
    - Room numbers
    - Accurate door size, and swings
    - Safety and protective elements
        - Fire extinguishers
        - Fire hoses
        - Lead linings
        - Radio frequency shielding
    - Fixed equipment
    - Portable equipment
    - Plumbing fixtures placed and identified
        - Sinks
        - Showers
        - Tubs
        - Toilets
        - Toilet stalls
        - Eyewash
        - Safety showers

        - Any item requiring plumbing
    - Construction dimension
- Roof plan
    - Materials
    - Elevations
    - Slopes
    - Drains
    - Other penetrations
    - Window-washing system
        - Davits
        - Bollards
        - Rails
        - Equipment
- Reflected ceiling plans
    - Suspended ceiling grids
    - Lighting fixtures
    - Diffusers
    - Registers
    - Sprinkler heads
    - Ceiling-mounted equipment
    - Exit signs
    - Equipment
    - Wall-mounted items
    - Shelving and special features
- Enlarged plans
    - Special spaces
    - Stairs
- Interior elevations
- Coordination utility cross-section at a minimum 12.5 mm scale
    - Corridors
    - Mechanical rooms
    - Utility placements
- Utility discipline zones
    - Coordination with existing structural
    - Coordination with new structural
- Vertical circulation
    - Dimensional locations
        - Elevator cars

        - Elevator entrances
        - Counterweights
        - Hoistway vents
        - Trap doors for lowering overhead

5.A.5.2.b Reports

- Architectural report
    - Upgrade basis of design

5.A.5.3 Structural

- All Structural documentation will:
    - Be a minimum of 70% complete
    - Be coordinated with similar activities in other disciplines
    - Address all remarks from Design Development 35% phase
- Conceptual design

5.A.5.3.a Plans

- Structural floor plans for each level and roof
    - Final column reference lines
    - Structural system dimensions
    - Size bearing walls
    - Major bracing locations
        - Bracing type
        - Dimensions
    - Indication of typical bay
    - Sizing of major components
    - Column sizes
    - All framing members sized
        - Girders
        - Beams
        - Joists
        - Open web joists
        - Concrete joists
        - Waffle slab
        - Space frames
        - Lintels
        - Type, extent, and direction of framing
        - Reference structural items to schedule

- Slabs
- Structural foundation plans
  - Size of caissons
  - Size of footings
  - Size of foundation walls
  - Size of grade beams
- Structural notes
- Critical coordination clearances
- Sections and details
- Column schedules
- Details
  - Reinforcing
    - Size
    - Spacing
    - Elevation of reinforcing
    - Type
    - Depths
  - Dimensioned foundation details
  - Large openings
  - Nonstandard beam to column framing
  - Concrete stairs
  - Exterior wall construction
  - Window wash supports
  - Anchors and ties
  - Elevator shaft details
  - Vibration isolation details
  - Large mechanical equipment and anchorage
  - Typical framing details
  - Standard structural steel connections
  - Sump pump systems
  - Reference to appropriate schedules
- Correlation with architectural and mechanical features
- Specifications

5.A.5.3.b Reports

- Structural report
  - Final structural system
  - Design codes

- Identification of design stresses
- Allowable foundation bearing capacity
- Compaction requirements

- Special condition
  - Shoring/underpinning of adjacent structures
- Schedules
  - Slabs
  - Beams
  - Columns

5.A.5.4 Mechanical

- All mechanical documentation will:
  - Be a minimum of 70% complete
  - Be coordinated with similar activities in other disciplines
  - Address all remarks from Design Development 35% phase

5.A.5.4.a Plans

- Conceptual design
- Mechanical plan drawings
  - Legend
  - Plan showing ducts
    - Double line drawing of ducts >150 mm
    - Single line drawing of ducts ≤150 mm
  - Indicate size of ducts
  - Indicate insulation/moisture prevention
  - Fire dampers
  - Smoke dampers
  - Balancing dampers
  - Location of all equipment
  - Indicate smoke detectors
    - Within ducts
    - In air-handling units
  - Special or complex ductwork

5.A.5.4.b Sections

- Drawing sections
  - Through equipment rooms
  - Typical ductwork

5.A.5.4.c Details

- Details of unique conditions
- Control diagrams with legend and operating description
  - Air conditioning systems
  - Exhaust systems
  - Refrigerator systems

5.A.5.4.d Schedules

- Equipment schedules
  - Air conditioning
  - Ventilation units
  - Refrigeration elements
  - Cooling towers
  - Fans
  - Pumps

5.A.5.4.e Reports

- Design report
  - Sizing calculations for ducts
  - Combustion air supply calculations
    - Boiler plants
    - Ventilation system
    - Heating system
  - Calculations for fan pressures and pump heads
  - Calculations for required sound attenuation of major fans

5.A.5.5 Plumbing

5.A.5.5.a Plans

- Plumbing system plan drawings
  - Create legends
  - Show location and size of equipment
    - Pumps
    - Tanks
  - Locate piping
    - Double line drawing and piping >150 mm
    - Single line drawing and piping ≤150 mm
  - Indicate size of pipes

- Indicate insulation/moisture prevention
- Indicate piping system
  - Chilled water
  - Condenser water
  - Hot water
  - Steam piping (including low quantities)
  - Waste
  - Sanitary
  - Vent
  - Oxygen
  - Nitrous oxide
  - Medical compressed air
  - Shop compressed air
  - Fuel gas
  - Vacuum outlets
- Walk-in coolers, freezers, cold rooms
  - Refrigeration systems
  - Schematic piping
  - Wiring diagrams
  - Automatic controls

- Plot plan for outside of building underground distribution
  - Therapeutic pool equipment
  - Blowers
- Riser diagrams

5.A.5.5.b Details

- Detailing
  - Unique conditions
  - Vibration isolation engineering
- One line flow and control diagrams
  - Chilled water
  - Condenser water
  - Hot water
  - Steam piping (including low quantities)
  - Air conditioning steam
- Schedules

5.A.5.5.c Reports

- Design report
  - Equipment selections based on manufacturer's catalog data
  - Sizing calculations
    - Piping mains and principal branches
    - Boiler
    - Condensate tank
    - Feedwater heater capacities
    - Feedwater storage capacity
  - Capacity, discharge pressure, and net positive suction pressure
    - Condensate transfer pumps
    - Boiler feedwater pumps
    - Pressure-reducing valves
    - Safety valves
    - Oil tanks and pumps
    - Gas systems
    - Blow-down systems

5.A.5.6 Fire Protection

5.A.5.6.a Plans

- Plan drawings
  - Create legends
  - Indicate existing systems
  - Show location and size of equipment
  - Locate piping
  - Indicate size of pipes
  - Equipment layouts
- Ceiling plan drawings
  - Sprinkler locations

5.A.5.6.b Specifications

- List manufacturers of equipment
- Sizes and capacities of major components

5.A.5.6.c Reports

- Fire Protection Design Report
  - Update Basis of Design

5.A.5.7 Electrical and Communications

- All Electrical documentation will:
  - Be a minimum of 70% complete
  - Be coordinated with similar activities in other disciplines
  - Address all remarks from Design Development 35% phase
- Conceptual design

5.A.5.7.a Plans

- Plan drawings indicating location of:
  - Transformer vaults
  - Padmount transformer location
  - Auxiliary power system connection
  - Engine generator sets
  - Unit substations
  - Other major equipment
- Floor plans
  - Room numbers
  - Room titles
  - Area functions
  - Lighting fixtures
  - Outlets for power
  - Layouts for special systems
- Scaled ceiling plans for each space
- Plot plan with primary feeder location showing access to the project
- One line riser diagram of electrical distribution
- One line riser diagram of auxiliary power distribution

5.A.5.7.b Diagrams

- Riser diagrams for:
  - Fire alarm
  - Nurse call
  - Telephone
  - Paging
  - Television
  - All low-voltage systems

5.A.5.7.c Reports

- Electrical design report
  - Electrical plant analysis
  - Lighting calculations
  - Load calculations
  - Description of short-circuit method
  - Voltage drop calculations
- Specifications

5.A.5.8 Summary

- All reports and other documentation will:
  - Be a minimum of 70% complete
  - Be coordinated with similar activities in each discipline
  - Address all remarks from the Design Development 35% phase
- Review energy study
- Revise Basis of Design report
- Vertical transportation
  - Required capacity
  - Speed and control system
  - Physical space requirements
    - Hoistway enclosure
    - Pits
    - Cabs
    - Machine rooms
    - Entrances

5.A.5.8.a Cost

- Cost
  - Revision of cost estimate
  - Revision of cost outline
  - Quantity takeoff
  - Labor cost by trade and specifications section
  - Material cost by trade and specifications section
- Revised specifications
- Equipment
  - Use of owner-furnished material/equipment
  - Special manufacturing requirements
  - Delivery requirements

- Storage requirements
- Manufacturer's plans and details for installation

5.A.5.8.b Schedule

- Construction schedule
  - Bar chart
  - Narrative report
    - Long lead items
    - Delivery times
    - Scheduling instructions
    - Phasing instructions
    - Optimum construction efficiency
- Design schedule
- Occupancy schedule
- Calculations
  - Design calculations for all disciplines
- Presentation
  - Revised renderings
  - Revised models

5.A.5.8.c Review

- Review and approval of architectural materials
- Review and approval of architectural material details
  - Openings
  - Windows
  - Doors
  - Penetrations
  - Walls
  - Copings
  - Roofing system
  - Water proofing
  - Caulking
  - Flashing
- Respond in writing to all comments from Design Development 35% phase
- Submit all documents for review
- Attend review meetings as necessary to answer questions

5.A.6 Construction Document Phase Submission 95%

5.A.6.1 Site/Landscape

- All Site documentation will:
  - Be a minimum of 95% completed
  - Be coordinated with similar activities in other disciplines
  - Address all remarks from Construction Document 70% phase

5.A.6.1.a Plans

- Vicinity Plan
- Existing Site Plan
- Proposed Site Plan
  - Existing site information
  - Dimension major site features
  - Building footprint
  - Key design elements
  - Major landscaping
  - Utility lines
  - Concept plan for drainage and grading
  - Vehicular access routes
  - Pedestrian access routes
  - Parking
  - Walks
  - Curbs
  - Service areas
  - Staking plan
  - Proposed contours
  - Construction marshalling information
  - Indications of phasing
  - Limits of work
  - Indication of future surrounding improvements
  - Indicate artwork
  - Locate signage
  - Security measures
- Planting plan
  - Location of all trees, shrubs, and lawns
  - Complete planting list
  - Planting details
- Landscape details

- Demolition plan
- Utility plot plan
  - Existing utilities and their connections
  - Proposed trunk sewers
  - Water distribution loop
  - Gas distribution mains
  - Location arrangement of water treatment equipment
- Alternate schemes
- Specifications and material list
  - Supporting documentation

5.A.6.1.b Reports

- Site Construction Document Design Report
  - Update Basis of Design

5.A.6.2 Architectural

- All Architectural documentation will:
  - Be a minimum of 95% completed
  - Be coordinated with similar activities in other disciplines
  - Address all remarks from Construction Document 70% phase
- Entire project site on one sheet for reference

5.A.6.2.a Plans

- Floor plans of each level
  - Indication of art work
  - Signage location
  - Interior planting
- Roof plan
- Reflected ceiling plans
- Floor covering plan
  - Material type
  - Graphics
  - Patterns
- Enlarged plans
- Fire protection egress plan
- Lab modules

5.A.6.2.b Interiors

- Interior space allocation and utilization plan
- Interior elevations
  - Signage location
- Exterior elevations
- Signage location
- Building sections
- Construction details
  - Any unique condition not previously covered
- Installation plans
  - Furniture
  - Equipment
- Color and finish boards with physical samples
- List of new and reused items
  - Number
  - Cross-referenced to details
  - Cross-referenced to specifications

5.A.6.2.c Reports

- Architectural Design report
  - Update Basis of Design

5.A.6.3 Structural

- All Structural documentation will:
  - Be a minimum of 95% completed
  - Be coordinated with similar activities in other disciplines
  - Address all remarks from Construction Document 70% phase
- Conceptual design

5.A.6.3.a Plans

- Structural floor plans for each level and roof
  - Column reference lines
  - Final dimensions
  - All bracing
  - Sizing of all components
  - Special provisions for installation or removal of equipment
- Structural foundation plans
  - Locate grades
  - Locate cleanout manholes

- Locate trenches
- Locate area wells
- Locate and dimension all elevator pits
- Locate elevation of bottom of footing
- Indicate concrete member
  - Dimensions
  - Size
  - Spacing
  - Reinforcing
- Locate finished and unfinished spaces
- Pipe sleeves through footings
- Pipe sleeves through below grade walls
- Caissons
  - Bottom elevation
  - Bell size
- Elevations
- Top of slab elevations
- Top of steel elevations

5.A.6.3.b Details

- Sections and details
- Critical coordination clearances
- Details
  - Clarification of lengths or arrangement of reinforcement
  - Any condition not previously addressed
- Schedules
  - Schedule for reinforcing bar
  - Column schedule
- Structural notes
- Correlation with architectural and mechanical features
- Specifications

5.A.6.3.c Reports

- Structural report
  - Completed computations
  - Special condition
  - General note
  - Boring logs

- Girder diagrams
  - Live loads
  - Uniform loads
  - Concentrated loads
  - Reactions
  - Girder material
  - Stresses

5.A.6.4 Mechanical, Plumbing, and Fire Protection

- All Mechanical documentation will:
  - Be a minimum of 95% completed
  - Be coordinated with similar activities in other disciplines
  - Address all remarks from Construction Documentation 70% phase
- Conceptual design

5.A.6.4.a Plans

- Complete construction documents for HVAC, Plumbing, and Fire Protection
  - Symbols legend sheet
  - Plans
  - Elevations
  - Sections
  - Notes
  - Details
  - Riser diagrams
  - Schedules
  - Control diagrams
  - Specifications
  - Completed calculations
- Sanitary
  - Invert elevations for sewage system
  - Legends
  - Notes
  - Details
  - Site plan
  - Sized equipment
  - Profiles greater than 60 m
    - Original grade
    - Finished grade

- Manholes
- Inlets
- Pipe size
- Road and walk crossings
- Elevations of other pertinent utilities

5.A.6.4.b Reports

- Mechanical design report
  - Update Basis of Design

5.A.6.5 Electrical and Communications

- All Electrical documentation will:
  - Be a minimum of 95% completed
  - Be coordinated with similar activities in other disciplines
  - Address all remarks from Construction Documentation 70% phase

5.A.6.5.a Drawings

- Conceptual design
- Floor plans
- Ceiling plans
- Plot plan
- Electrical distribution plan
- Riser diagrams
- One line diagrams with size and fault currents
  - For all switchgear
  - For all switchboards
  - For all panel boards
  - Feeder sizes
  - Transformer sizes

5.A.6.5.b Reports

- Electrical design report
  - Update Basis of Design
- Specifications

5.A.6.6 Summary

- All reports and other documentation will:
  - Be a minimum of 95% completed

    - Be coordinated with similar activities in each discipline
    - Address all remarks from the Construction Document 70% phase
- Basis of Design report
- Cost estimates
- Specifications
- Schedules
- All design calculations
- Presentation
    - Finished rendering
    - Final model
- Reviews
    - Respond in writing to all 70% of Construction Document comments
    - Submit all documents for review
    - Attend review meetings as necessary to answer questions

5.A.7 Construction Document Phase Final Submission 100%

5.A.7.1 Final Submission

- All reports and other documentation will:
    - Be 100% completed
    - Be coordinated with similar activities in each discipline
- Final Basis of Design report for all disciplines
- Final cost estimates
- Final specifications
- Drawings (sealed by registered architect, landscape architect, and professional engineers responsible for the design)
- Final schedules
- Final design calculations
- Presentation
    - Finished rendering
    - Final model
- Reviews
    - Respond in writing to all 95% of Construction Document Phase comments
    - Submit all documents for review
    - Attend review meetings as necessary to answer questions
- Final deliverable

- Mylar set of working drawings
- Electronic copy of CADD Drawings
- Electronic copy of specifications

- Assistance to the government in preparation of:
  - Invitation for bids, or other solicitation method
  - Phasing or commissioning requirements

5.B Project-Specific Request for Variance Form

The following standard form shall be used to request project-specific variances to the NIH Design Policy and Guidelines. Variances shall be submitted electronically by the Project Officer.

Date: Variance Request Number:
Discipline:

To: Division of Policy and Program Assessment

From:

Phone Number:

Fax Number:

PROJECT INFORMATION (provide brief description of the project. Is it renovation or new construction consisting of labs, animal house, offices, etc.?)

Project Status: (provide the present % stage of its design, construction, POR, or study of a project)

Project Title:

Work Request Number:

Building Number/Area (gross floor area of the project):

Proposed Variance Subject	
DWG. Ref.	
Detail No.	
Spec. Ref.	
Paragraph No. in Guidelines	

(Attach a copy of the page from the guidelines highlighting the paragraph concerning the variance request.)

Design Reviewers (provide the names of the persons responsible for the review of the project design [in-house or CQM]):

Proposed Variance Subject:

Introduction (describe the variance and its background):

Justification (describe the reasons for seeking the variance and suggest the alternate solution):

Recommendation (provide PO comments and recommendations):

Attachments (list attachments):

Note: Each project shall initiate and maintain a project variance log of Variance Requests sent to the Division of Policy and Program Assessment (DPPA). Include the date of submission to the DPPA, date response was received, and response action.

5.C Animal Research Facility Planning List

The following is an alphabetical list of items to consider when planning and programming a new animal research facility or a renovation to an existing facility. This list is not meant to be all-inclusive.

- ABSL-2, ABSL-3, ABSL-4
- Acoustics/noise
- Adjacencies
- Administrative space
- Airlocks
- Alarms (visual or audible)
- Anesthesia scavenger system
- Animal holding (large and small)
- Animal procedures
- Animal receiving
- Aquatics (fish, amphibians, urchins, etc.)
- Autoclaves (pass-through, benchtop, steam cleanliness)
- Automatic water system
- Barrier suites
- Behavioral studies
- Biological safety cabinet (BSC) location
- Cagewash
- Circulation
- Clinical pathology/laboratory diagnostics
- Compressed gases
- Conference rooms
- Corridor width
- Decontamination at animal receiving
- Doors (height, width, closures, frames)
- Downdraft or necropsy tables
- Equipment
- Elevator locations
- Emergency backup power
- Finishes
- Floors

- Holding room size
- Imaging
- Information technology (systems and connections)
- Isolation cubicles
- Janitor rooms
- Lighting control
- Laundry
- Loading dock-dedicated to animal receiving
- Materials management
- Medical pathologic waste (MPW)
- Mechanical space
- Moisture testing
- Natural light
- Operating rooms
- Pest management
- Pharmacy
- Pressurization for rooms and suites
- Quarantine
- Rack and cage systems
- Radiation safety
- Radiology suite
- Redundancy of systems
- Record-keeping and record storage
- Room cleaning and sanitation
- Signage
- Security system and implementation
- Special feed preparation/kitchen
- Staff lockers
- Storage
- Surgical suite
- Traffic patterns
- Training rooms
- Transgenic suite (holding and procedure)
- Vacuum systems
- Vibration stability

- Wall protection
- Water purification systems